2009-2010

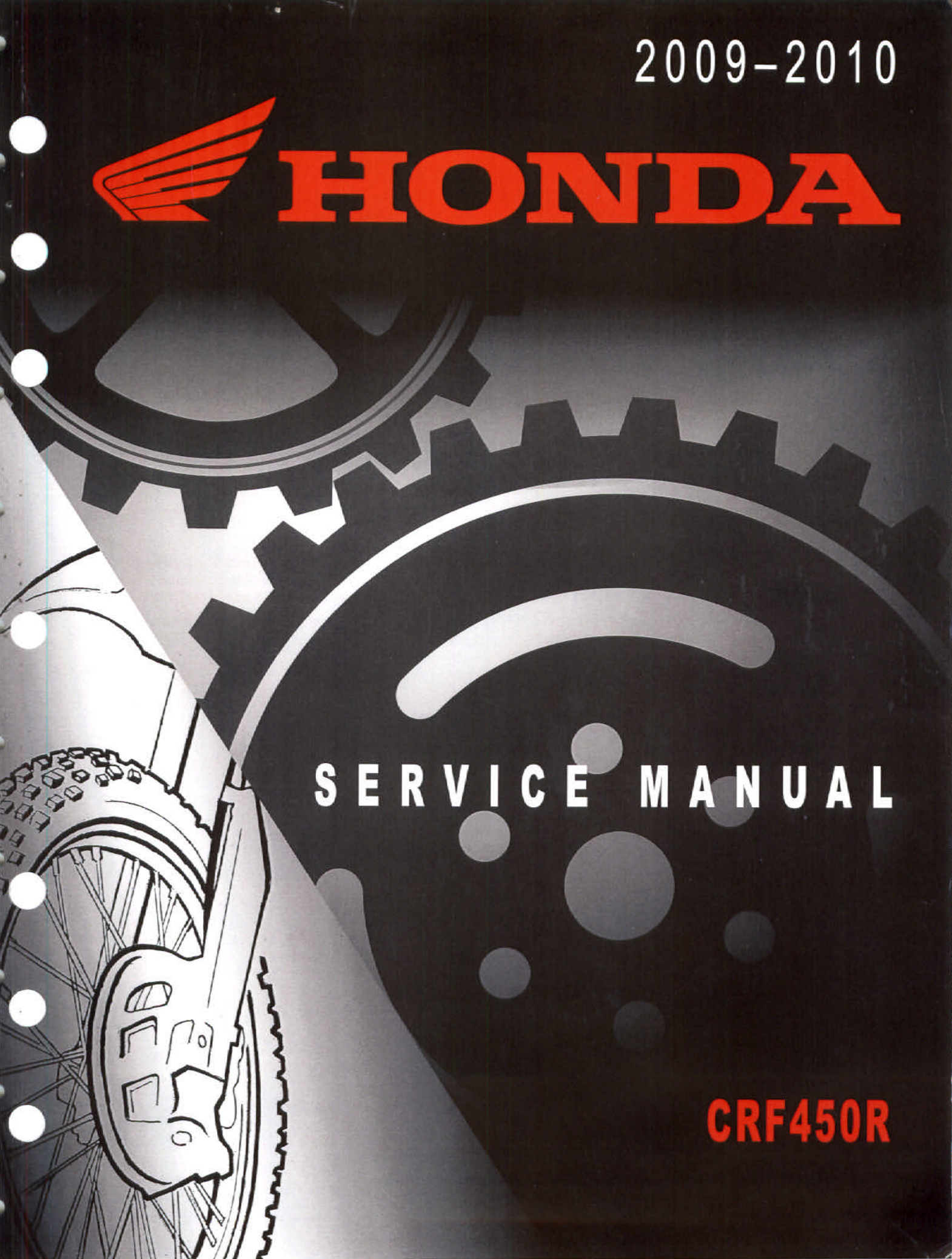

SERVICE MANUAL

CRF450R

CONTENTS

MEMO

1. GENERAL INFORMATION

SERVICE RULES

1. Use Honda genuine or Honda-recommended parts and lubricants or their equivalents. Parts that do not meet Honda's design specifications may cause damage to the motorcycle.
2. Use the special tools designed for this product to avoid damage and incorrect assembly.
3. Use only metric tools when servicing the motorcycle. Metric bolts, nuts and screws are not interchangeable with English fastener.
4. Install new gaskets, O-rings, cotter pins, and lock plates when reassembling.
5. When tightening bolts or nuts, begin with the larger diameter or inner bolt first. Then tighten to the specified torque diagonally in incremental steps unless a particular sequence is specified.
6. Clean parts in cleaning solvent upon disassembly. Lubricate any sliding surfaces before reassembly.
7. After reassembly, check all parts for proper installation and operation.
8. Route all electrical wires as shown in the Cable and Harness Routing (page 1-19).

ABBREVIATION

Throughout this manual, the following abbreviations are used to identify the respective parts or systems.

Abbrev. term	Full term
CKP sensor	Crankshaft Position sensor
DLC	Data Link Connector
DTC	Diagnostic Trouble Code
ECM	Engine Control Module
ECT sensor	Engine Coolant Temperature sensor
EEPROM	Electrically Erasable Programmable Read Only Memory
HDS	Honda Diagnostic System
HPSD	Honda Progressive Steering Damper
IAT sensor	Intake Air Temperature sensor
MAP sensor	Manifold Absolute Pressure sensor
PGM-FI	Programmed Fuel Injection
SCS connector	Service Check Short connector
TP sensor	Throttle Position sensor

MODEL IDENTIFICATION

'09 model shown:

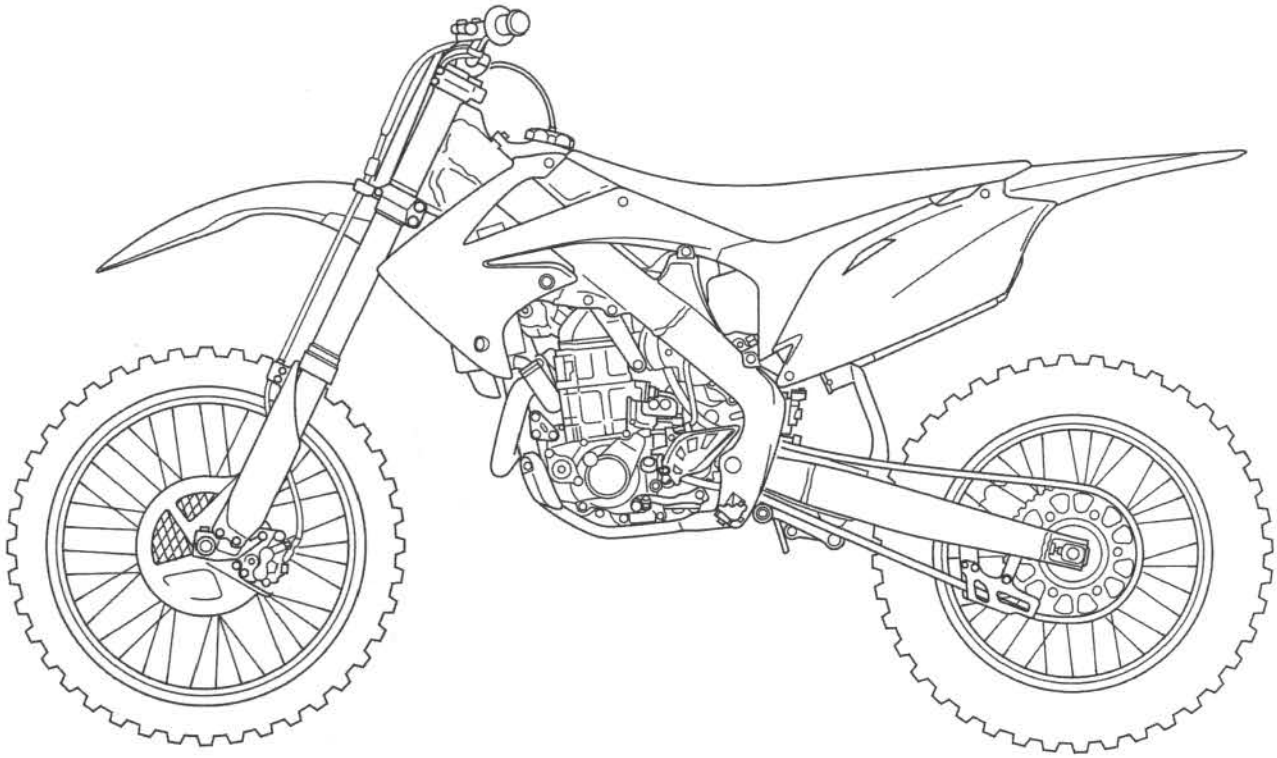

SERIAL NUMBERS

The Vehicle Identification Number (VIN) is stamped on the right side of the steering head.

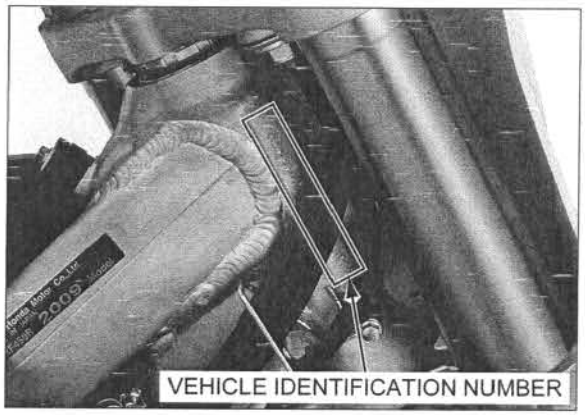

The engine serial number is stamped on the left side of the lower crankcase.

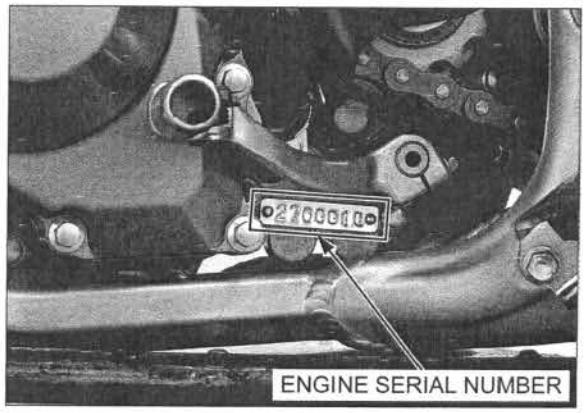

The throttle body identification number is stamped on the right side of the throttle body.

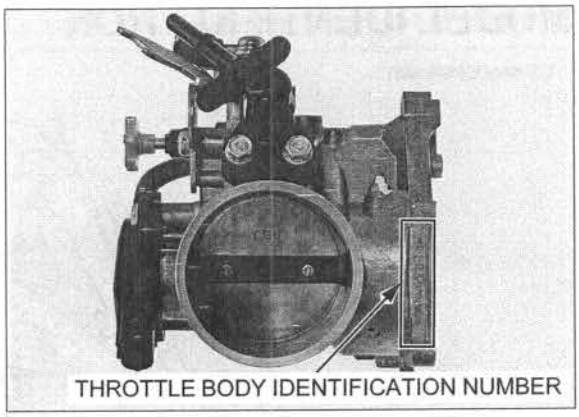

LABEL

The name plate is located on the right side of the frame.

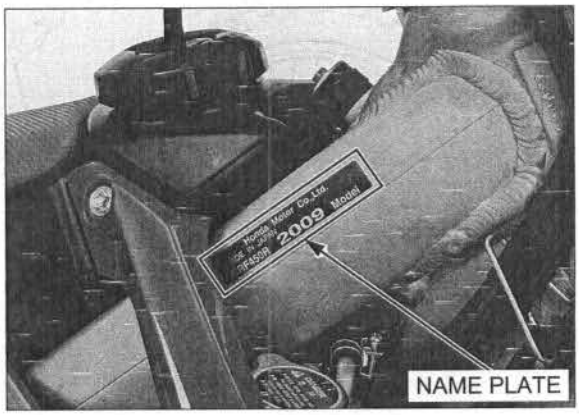

GENERAL SPECIFICATIONS

ITEM				SPECIFICATION
DIMENSIONS	Overall length		'09	2,193 mm (86.3 in)
			After '09	2,191 mm (86.3 in)
	Overall width			827 mm (32.6 in)
	Overall height		'09	1,278 mm (50.3 in)
			After '09	1,273 mm (50.1 in)
	Wheelbase		'09	1,493 mm (58.8 in)
			After '09	1,491 mm (58.7 in)
	Seat height		'09	957 mm (37.7 in)
			After '09	954 mm (37.6 in)
	Footpeg height		'09	428 mm (16.9 in)
			After '09	424 mm (16.7 in)
	Ground clearance		'09	336 mm (13.2 in)
			After '09	332 mm (13.1 in)
FRAME	Frame type			Twin tube
	Front suspension			Telescopic fork
	Front suspension axle travel			273 mm (10.7 in)
	Front suspension cushion stroke			310 mm (12.2 in)
	Rear suspension			Pro-Link
	Rear wheel travel			320 mm (12.6 in)
	Rear damper			Decarbon type with nitrogen gas filled damper
	Front tire size			80/100-21 51M
	Rear tire size			120/80-19 63M
	Tire brand (Dunlop)			Front: D742FA/Rear: D756
	Front brake			Hydraulic single disc
	Front brake swept area			334.5 cm^2 (51.8 in^2)
	Rear brake			Hydraulic single disc
	Rear brake swept area			391.1 cm^2 (60.6 in^2)
	Caster angle		'09	27° 3'
			After '09	26° 52'
	Trail length		'09	115.6 mm (4.55 in)
			After '09	114.2 mm (4.50 in)
	Fuel tank capacity			5.7 liter (1.51 US gal, 1.25 Imp gal)
ENGINE	Bore and stroke			96.0 x 62.1 mm (3.78 x 2.44 in)
	Displacement			449.7 cm^3 (27.43 cu-in)
	Compression ratio			12.0:1
	Valve train			Chain drive and OHC with rocker arm
	Intake valve	opens	at 1.0 mm (0.04 in) lift	15° BTDC
		closes	at 1.0 mm (0.04 in) lift	50° ABDC
	Exhaust valve	opens	at 1.0 mm (0.04 in) lift	55° BBDC
		closes	at 1.0 mm (0.04 in) lift	15° ATDC
	Lubrication system			Forced pressure and wet sump
	Oil pump type			Trochoid
	Cooling system			Liquid cooled
	Air filtration			Oiled polyurethane foam
	Crankshaft type			Assembled type
	Engine dry weight			27.1 kg (59.7 lbs)
	Cylinder arrangement			Single cylinder, inclined 6° 30' from vertical
FUEL DELIVERY SYSTEM	Type			PGM-FI
	Throttle bore			50 mm (2.0 in)

ITEM			SPECIFICATION
DRIVE TRAIN	Clutch system		Multi-plate, wet
	Clutch operation system		Cable operated
	Transmission		Constant mesh, 5-speed
	Primary reduction		2.739 (63/23)
	Final reduction		3.692 (48/13)
	Gear ratio	1st	1.800 (27/15)
		2nd	1.470 (25/17)
		3rd	1.235 (21/17)
		4th	1.050 (21/20)
		5th	0.909 (20/22)
	Gearshift pattern		Left foot operated return system, 1 - N - 2 - 3 - 4 - 5
ELECTRICAL	Ignition system		Computer-controlled digital transistorized with electric advance
	Charging system		Single phase output alternator
	Regulator/rectifier		SCR shorted/single phase, full wave rectification

LUBRICATION SYSTEM SPECIFICATIONS

Unit: mm (in)

ITEM		STANDARD	SERVICE LIMIT
Engine oil capacity	At draining	0.58 liter (0.61 US qt, 0.51 Imp qt)	–
	At oil filter change	0.62 liter (0.66 US qt, 0.55 Imp qt)	–
	At disassembly	0.77 liter (0.81 US qt, 0.68 Imp qt)	–
Transmission oil capacity	At draining	0.59 liter (0.62 US qt, 0.52 Imp qt)	–
	At disassembly	0.67 liter (0.71 US qt, 0.59 Imp qt)	–
Recommended engine oil		Pro Honda GN4 4-stroke oil (U.S.A. and Canada) or equivalent motor oil API service classification: SG or Higher JASO T 903 standard: MA Viscosity: SAE 10W-30	–
Recommended transmission oil		Pro Honda GN4 4-stroke oil (U.S.A. and Canada) or equivalent motor oil API service classification: SG or Higher JASO T 903 standard: MA Viscosity: SAE 10W-30	–
Oil pump	Tip clearance	0.15 (0.006)	0.20 (0.008)
	Body clearance	0.15 – 0.21 (0.006 – 0.008)	–
	Side clearance	0.15 – 0.23 (0.006 – 0.010)	–

FUEL SYSTEM (PGM-FI) SPECIFICATIONS

ITEM		SPECIFICATIONS
Throttle body identification number	'09	GQD0A
	After '09	GQD3A
Idle speed	'09	1,750 ± 100 rpm
	After '09	1,800 ± 100 rpm
Throttle grip freeplay		3 – 5 mm (1/8 – 3/16 in)
ECT sensor resistance (at 20°C/68°F)		2.3 – 2.6 kΩ
Fuel injector resistance (at 20°C/68°F)		11.6 – 12.4 Ω
Fuel pressure		333 – 353 kPa (3.4 – 3.6 kgf/cm^2, 48 – 51 psi)
Fuel pump flow (at 12 V)		50 cm^3 (1.7 US oz, 1.8 Imp oz) minimum/10 seconds

COOLING SYSTEM SPECIFICATIONS

ITEM		SPECIFICATIONS
Coolant capacity	At change	1.04 liter (1.10 US qt, 0.92 Imp qt)
	At disassembly	1.06 liter (1.12 US qt, 0.93 Imp qt)
Radiator cap relief pressure		108 – 137 kPa (1.1 – 1.4 kgf/cm^2, 16 – 20 psi)
Recommended antifreeze		Pro Honda HP Coolant or an equivalent high quality ethylene glycol antifreeze containing silicate-free corrosion inhibitors (1:1 mixture with distilled water)

CYLINDER HEAD/VALVES SPECIFICATIONS

Unit: mm (in)

ITEM			STANDARD	SERVICE LIMIT
Cylinder compression			392 kPa (4.0 kgf/cm^2, 57 psi) at 600 rpm	–
Cylinder head warpage			–	0.05 (0.002)
Valve and valve guide	Valve clearance	IN	0.16 ± 0.03 (0.006 ± 0.001)	–
		EX	0.28 ± 0.03 (0.011 ± 0.001)	–
	Valve stem O.D.	IN	4.975 – 4.990 (0.1959 – 0.1965)	–
		EX	4.965 – 4.980 (0.1955 – 0.1961)	4.96 (0.195)
	Valve guide I.D.	IN	5.000 – 5.012 (0.1969 – 0.1973)	5.052 (0.1989)
		EX	5.000 – 5.012 (0.1969 – 0.1973)	5.052 (0.1989)
	Stem-to-guide clearance	IN	0.010 – 0.037 (0.0004 – 0.0015)	–
		EX	0.020 – 0.047 (0.0008 – 0.0019)	–
	Valve guide projection above cylinder head	IN	14.8 – 15.0 (0.58 – 0.59)	–
		EX	17.8 – 18.0 (0.70 – 0.71)	–
	Valve seat width	IN	1.1 – 1.3 (0.04 – 0.05)	2.0 (0.08)
		EX	1.3 – 1.5 (0.05 – 0.06)	2.0 (0.08)
Valve spring free length		IN	40.72 (1.603)	40.6 (1.60)
		EX	42.30 (1.665)	42.1 (1.66)
Rocker arm	Rocker arm I.D.		12.000 – 12.018 (0.4724 – 0.4731)	12.025 (0.4734)
	Rocker arm shaft O.D.		11.977 – 11.985 (0.4715 – 0.4718)	11.97 (0.471)
	Rocker arm-to-shaft clearance		0.015 – 0.041 (0.0006 – 0.0016)	0.055 (0.0022)
Camshaft	Cam lobe height	IN	37.540 – 37.780 (1.4779 – 1.4874)	37.52 (1.477)
		EX	28.598 – 28.838 (1.1259 – 1.1354)	28.58 (1.125)
Valve lifter O.D.			25.978 – 25.993 (1.0228 – 1.0233)	25.97 (1.022)
Valve lifter bore I.D.			26.010 – 26.026 (1.0240 – 1.0246)	26.04 (1.025)

CYLINDER/PISTON SPECIFICATIONS

Unit: mm (in)

ITEM			STANDARD	SERVICE LIMIT
Cylinder	I.D.		96.000 – 96.015 (3.7795 – 3.7801)	96.025 (3.7805)
	Out-of-round		–	0.010 (0.0004)
	Taper		–	0.010 (0.0004)
	Warpage		–	0.05 (0.002)
Piston, piston ring	Piston mark direction		"IN" mark facing toward the intake side	–
	Piston O.D.		95.970 – 95.980 (3.7783 – 3.7787)	95.940 (3.7772)
	Piston O.D. measurement point		7.0 (0.30) from the bottom of skirt	–
	Piston pin bore I.D.		19.002 – 19.008 (0.7481 – 0.7483)	19.03 (0.749)
	Piston pin O.D.		18.994 – 19.000 (0.7478 – 0.7480)	18.99 (0.748)
	Piston-to-piston pin clearance		0.002 – 0.014 (0.0001 – 0.0006)	0.04 (0.002)
	Top ring mark		"R" mark side facing up	–
	Piston ring-to-ring groove clearance	Top	0.065 – 0.100 (0.0026 – 0.0039)	0.12 (0.004)
	Piston ring end gap	Top ring	0.25 – 0.31 (0.010 – 0.012)	0.32 (0.013)
		Oil ring (side rail)	0.20 – 0.70 (0.008 – 0.028)	0.71 (0.028)
Cylinder-to-piston clearance			0.020 – 0.045 (0.0008 – 0.0018)	0.085 (0.0033)
Connecting rod small end I.D.			19.016 – 19.038 (0.7487 – 0.7495)	19.05 (0.750)
Connecting rod-to-piston pin clearance			0.016 – 0.044 (0.0006 – 0.0017)	0.06 (0.002)

CLUTCH/KICKSTARTER/GEARSHIFT LINKAGE SPECIFICATIONS

Unit: mm (in)

ITEM		STANDARD	SERVICE LIMIT
Clutch lever freeplay		10 – 20 (3/8 – 13/16)	–
Clutch spring free length		47.9 (1.89)	–
Clutch disc thickness		2.92 – 3.08 (0.115 – 0.121)	2.85 (0.112)
Clutch plate warpage		–	0.15 (0.006)
Kickstarter pinion gear I.D.		22.007 – 22.028 (0.8664 – 0.8672)	22.05 (0.868)
Kickstarter pinion gear bushing	I.D.	20.000 – 20.021 (0.7874 – 0.7882)	20.04 (0.789)
	O.D.	21.979 – 22.000 (0.8653 – 0.8661)	21.96 (0.865)
Kickstarter spindle O.D.		19.980 – 19.993 (0.7866 – 0.7871)	19.97 (0.786)
Kickstarter idle gear I.D.		20.020 – 20.041 (0.7882 – 0.7890)	20.07 (0.790)
Kickstarter idle gear bushing	I.D.	17.000 – 17.018 (0.6693 – 0.6700)	17.04 (0.671)
	O.D.	19.979 – 20.000 (0.7866 – 0.7874)	19.96 (0.786)
Countershaft O.D. at kickstarter idle gear bushing		16.966 – 16.984 (0.6680 – 0.6687)	16.95 (0.667)

CRANKCASE/CRANKSHAFT/TRANSMISSION/BALANCER SPECIFICATIONS

Unit: mm (in)

ITEM			STANDARD	SERVICE LIMIT
Crankshaft	Side clearance		0.30 – 0.55 (0.012 – 0.022)	0.6 (0.02)
	Radial clearance		0.006 – 0.018 (0.0002 – 0.0007)	0.05 (0.002)
	Runout	R	–	0.03 (0.001)
		L	–	0.05 (0.002)
Transmission	Gear I.D.	M4	28.007 – 28.028 (1.1026 – 1.1035)	28.05 (1.104)
		M5	28.020 – 28.033 (1.1031 – 1.1037)	28.07 (1.105)
		C2	30.020 – 30.041 (1.1819 – 1.1827)	30.07 (1.184)
		C3	28.020 – 28.041 (1.1031 – 1.1040)	28.07 (1.105)
	Bushing O.D.	M4, M5, C3	27.959 – 27.980 (1.1007 – 1.1016)	27.95 (1.100)
		C2	29.979 – 30.000 (1.1803 – 1.1811)	29.95 (1.179)
	Bushing I.D.	M5	25.000 – 25.021 (0.9843 – 0.9851)	25.04 (0.986)
		C2	27.000 – 27.021 (1.0630 – 1.0638)	27.04 (1.065)
		C3	24.985 – 25.006 (0.9837 – 0.9837)	25.02 (0.985)
	Gear-to-bushing clearance	M4	0.027 – 0.069 (0.0011 – 0.0027)	0.11 (0.004)
		M5	0.040 – 0.074 (0.0016 – 0.0029)	0.12 (0.005)
		C2	0.020 – 0.062 (0.0008 – 0.0024)	0.12 (0.005)
		C3	0.040 – 0.082 (0.0016 – 0.0032)	0.12 (0.005)
	Mainshaft O.D.	at M5 bushing	24.959 – 24.980 (0.9826 – 0.9835)	24.94 (0.982)
	Countershaft O.D.	at C2 bushing	26.959 – 26.980 (1.0614 – 1.0622)	26.94 (1.061)
		at C3 bushing	24.959 – 24.980 (0.9826 – 0.9835)	24.94 (0.982)
	Bushing-to-shaft clearance	M5, C2	0.020 – 0.062 (0.0008 – 0.0024)	0.12 (0.005)
		C3	0.005 – 0.047 (0.0002 – 0.0019)	0.08 (0.003)
Shift fork, shift fork shaft	Fork claw thickness		4.93 – 5.00 (0.194 – 0.197)	4.8 (0.19)
	Shift fork I.D.	Center	11.003 – 11.024 (0.4332 – 0.4340)	11.04 (0.435)
		Right and Left	12.035 – 12.056 (0.4738 – 0.4746)	12.07 (0.475)
	Fork shaft O.D.	Center	10.969 – 10.980 (0.4318 – 0.4323)	10.96 (0.431)
		Right and Left	11.966 – 11.984 (0.4711 – 0.4718)	11.95 (0.470)

FRONT WHEEL/SUSPENSION/STEERING SPECIFICATIONS

Unit: mm (in)

ITEM				STANDARD	SERVICE LIMIT
Cold tire pressure				100 kPa (1.0 kgf/cm^2, 15 psi)	–
Axle shaft runout				–	0.2 (0.01)
Wheel rim runout	Radial			–	2.0 (0.08)
	Axial			–	2.0 (0.08)
Wheel hub-to-rim distance				See page 14-11	–
Fork	Spring free length			458 – 462 (18.0 – 18.2)	451 (17.8)
	Fork slider runout			–	0.2 (0.01)
	Recommended fork oil	KYB		KHL15-11	–
	Oil level			42 – 47 mm (1.65 – 1.85 mm)	–
	Oil capacity	Fork tube	'09	350 cm^3 (11.8 US oz, 12.3 Imp oz)	–
			After '09	355 cm^3 (12.0 US oz, 12.5 Imp oz)	–
		Fork damper		201 cm^3 (6.8 US oz, 7.1 Imp oz)	–
Compression damping adjuster standard position				13 clicks out from full in	–
Rebound damping adjuster standard position				8 clicks out from full in	–
HPSD	Recommended damper oil			Pro-Honda HP Fork Oil 5W or equivalent	–
	Free piston depth at 20°C (68°F)			27.3 – 27.9 (1.07 – 1.10)	–
	Damping force adjuster standard position			11 clicks out from full in	–

REAR WHEEL/SUSPENSION SPECIFICATIONS

Unit: mm (in)

ITEM			STANDARD	SERVICE LIMIT
Cold tire pressure			100 kPa (1.0 kgf/cm^2, 15 psi)	–
Axle shaft runout			–	0.2 (0.01)
Wheel rim runout	Radial		–	2.0 (0.08)
	Axial		–	2.0 (0.08)
Wheel hub-to-rim distance			See page 14-11	–
Drive chain	Size/link	DID	DID 520DMA4/116RB	–
		RK	RK 520TXZ/116RJ	–
	Slack		30 – 40 (1.2 – 1.6)	–
Drive chain length at 17 pins (16 pitches)			–	259 (10.2)
Drive chain slider thickness			–	5 (0.2)
Drive chain roller O.D.			–	35 (1.4)
Shock absorber	Damper gas pressure		1 MPa (10.2 kg/cm^2, 145 psi)	–
	Damper compressed gas		Nitrogen gas	–
	Recommended shock oil	KYB	KHV10-K2C	–
	Damper rod compressed force at 12 mm compressed		180 – 220 N (18.4 – 22.4 kgf, 40.6 – 49.4 lbf)	–
	Spring installed length (standard)		249.5 (9.82)	–
	Oil capacity		420 cm^3 (14.2 US oz, 14.8 Imp oz)	–
High speed compression damping adjuster standard position		'09	1 – 1-1/3 turns out from full in	–
		After '09	1-1/12 – 1-5/12 turns out from full in	–
Low speed compression damping adjuster standard position			11 – 15 clicks out from full in	–
Rebound damping adjuster standard position		'09	13 – 17 clicks out from full in	–
		After '09	11 – 15 clicks out from full in	–

HYDRAULIC BRAKE SPECIFICATIONS

Unit: mm (in)

ITEM		STANDARD	SERVICE LIMIT
Front	Brake fluid	DOT 4	–
	Brake pad wear indicator	–	1.0 (0.04)
	Brake disc thickness	2.8 – 3.0 (0.11 – 0.12)	2.5 (0.10)
	Brake disc warpage	–	0.15 (0.006)
	Master cylinder I.D.	11.000 (0.4331)	11.050 (0.4350)
	Master piston O.D.	10.971 (0.4319)	10.840 (0.4268)
	Caliper cylinder I.D.	27.025 (1.0640)	27.060 (1.0654)
	Caliper piston O.D.	26.968 (1.0617)	26.853 (1.0572)
Rear	Brake fluid	DOT 4	–
	Brake pad wear indicator	–	1.0 (0.04)
	Brake disc thickness	3.8 – 4.0 (0.15 – 0.16)	3.5 (0.14)
	Brake disc warpage	–	0.15 (0.006)
	Master cylinder I.D.	9.547 (0.3759)	9.575 (0.3770)
	Master piston O.D.	9.491 (0.3737)	9.465 (0.3726)
	Caliper cylinder I.D.	22.650 (0.8917)	22.712 (0.8942)
	Caliper piston O.D.	22.620 (0.8905)	22.573 (0.8887)
	Brake pedal height	79.6 (3.13)	–

ELECTRICAL SYSTEM SPECIFICATIONS

ITEM			SPECIFICATION
Spark plug	Standard	(NGK)	SILMAR9A-9S
	Optional	(NGK)	SILMAR10A-9S
Spark plug gap			0.8 – 0.9 mm (0.03 – 0.04 in)
Ignition coil resistance (at 20°C/68°F)			2.6 – 3.2 Ω
Ignition coil peak voltage			100 V minimum
CKP sensor peak voltage			0.7 V minimum
Alternator coil resistance (at 20°C/68°F)			0.1 – 1.0 Ω
Ignition timing ("F" mark)			8° BTDC at idle
Alternator		Capacity	0.091 kw/5,000 rpm

TORQUE VALUES

STANDARD TORQUE VALUES

FASTENER TYPE	TORQUE N·m (kgf·m, lbf·ft)	FASTENER TYPE	TORQUE N·m (kgf·m, lbf·ft)
5 mm bolt and nut	5.2 (0.5, 3.8)	5 mm screw	4.2 (0.4, 3.1)
6 mm bolt and nut	10 (1.0, 7)	6 mm screw	9.0 (0.9, 6.6)
(Includes SH flange bolt)		6 mm flange bolt	12 (1.2, 9)
8 mm bolt and nut	22 (2.2, 16)	(8 mm head, large flange)	
10 mm bolt and nut	34 (3.5, 25)	8 mm flange bolt and nut	27 (2.8, 20)
12 mm bolt and nut	54 (5.5, 40)	10 mm flange bolt and nut	39 (4.0, 29)

ENGINE & FRAME TORQUE VALUES

- Torque specifications listed below are for specified fasteners.
- Others should be tightened to standard torque values listed above.

FRAME/BODY PANELS/EXHAUST SYSTEM

ITEM	Q'TY	THREAD DIA. (mm)	TORQUE N·m (kgf·m, lbf·ft)	REMARKS
Seat mounting bolt	2	8	26 (2.7, 19)	
Side cover bolt	2	6	10 (1.0, 7)	
Radiator shroud bolt (upper side)	4	5	5.0 (0.5, 3.7)	
Engine guard bolt	1	6	10 (1.0, 7)	
Sub-frame upper mounting bolt	2	8	33 (3.4, 24)	
Sub-frame right lower mounting bolt	1	10	49 (5.0, 36)	
Sub-frame left lower mounting bolt	1	8	33 (3.4, 24)	
Seat bracket screw	1	5	4.0 (0.4, 3.0)	
Muffler mounting bolt	2	8	26 (2.7, 19)	
Muffler joint band bolt	1	8	21 (2.1, 15)	
Exhaust pipe joint nut	2	8	21 (2.1, 15)	
Exhaust pipe protector bolt	2	6	12 (1.2, 9)	
Exhaust pipe protector band	2	–	3.0 (0,3, 2.2)	
Step bracket (upper)	2	12	55 (5.6, 41)	
(lower)	2	8	30 (3.1, 22)	
Rear fender mounting bolt	4	6	13 (1.3, 10)	
Exhaust pipe stud bolt	2	8	See page 3-11	
Air cleaner connecting boot band bolt (throttle body side)	1	4	See page 3-8	

MAINTENANCE

ITEM	Q'TY	THREAD DIA. (mm)	TORQUE N·m (kgf·m, lbf·ft)	REMARKS
Engine oil drain bolt	1	8	16 (1.6, 12)	Apply engine oil to the threads and seating surface.
Transmission oil drain bolt	1	8	16 (1.6, 12)	Apply engine oil to the threads and seating surface.
Transmission oil check bolt	1	6	12 (1.2, 9)	
Crankshaft hole cap	1	30	15 (1.5, 11)	Apply grease to the threads.
Spark plug	1	10	22 (2.2, 16)	
Throttle cable adjuster lock nut				
(grip side)	1	7	4.0 (0.4, 3.0)	
(throttle body side)	1	6	4.0 (0.4, 3.0)	
Throttle cable bolt	2	6	4.0 (0.4, 3.0)	
Front spoke	36	BC3.5	3.7 (0.4, 2.7)	
Rear spoke	32	4.5	3.7 (0.4, 2.7)	
Front rim lock	1	8	12 (1.2, 9)	
Rear rim lock	1	8	12 (1.2, 9)	
Drive chain upper roller bolt	1	8	12 (1.2, 9)	SH bolt

FUEL SYSTEM (PGM-FI)

ITEM	Q'TY	THREAD DIA. (mm)	TORQUE N·m (kgf·m, lbf·ft)	REMARKS
Fuel tank band bracket screw	1	5	4.0 (0.4, 3.0)	
Fuel tank bracket bolt	2	6	10 (1.0, 7)	
Fuel tank stopper cable mounting bolt (frame side)	1	4	3.5 (0.4, 2.6)	
Mud guard mounting screw	2	5	1.1 (0.1, 0.8)	
IAT sensor screw	2	5	1.1 (0.1, 0.8)	
Air cleaner housing mounting bolt	2	6	10 (1.0, 7)	
Air cleaner connecting boot band screw (air cleaner side)	1	4	0.7 (0.1, 0.5)	
Fuel pump mounting bolt	6	6	11 (1.1, 8)	For tightening sequence 6-44
Insulator band screw (throttle body side)	1	–	See page 6-53	
Throttle drum cover bolt	1	5	3.4 (0.3, 2.5)	
Fast idle knob lock nut	1	12	2.3 (0.2, 1.7)	
MAP sensor screw	1	6	4.9 (0.5, 3.6)	
ECT sensor	1	10	12 (1.2, 9)	
Injector joint bolt	2	5	5.1 (0.5, 3.8)	
Clamper stay screw	1	5	3.4 (0.3, 2.5)	
Air cleaner housing cover screw	4	5	1.1 (0.1, 0.8)	

COOLING SYSTEM

ITEM	Q'TY	THREAD DIA. (mm)	TORQUE N·m (kgf·m, lbf·ft)	REMARKS
Water pump impeller	1	7	12 (1.2, 9)	
Radiator connecting hose band screw	2	–	See page 7-11	
Radiator hose band screw	12	–	See page 7-11	

ENGINE REMOVAL/INSTALLATION

ITEM	Q'TY	THREAD DIA. (mm)	TORQUE N·m (kgf·m, lbf·ft)	REMARKS
Cylinder head hanger plate bolt	4	8	33 (3.4, 24)	
Cylinder head hanger bolt	2	10	54 (5.5, 40)	
Lower engine hanger nut	1	10	54 (5.5, 40)	
Front engine hanger nut	1	10	54 (5.5, 40)	
Front engine hanger plate nut	2	8	26 (2.7, 19)	

CYLINDER HEAD/VALVES

ITEM	Q'TY	THREAD DIA. (mm)	TORQUE N·m (kgf·m, lbf·ft)	REMARKS
Breather plate bolt	2	6	12 (1.2, 9)	Apply locking agent to the threads (page 9-8).
Cylinder head cover bolt	2	6	10 (1.0, 7)	
Camshaft holder mounting bolt	4	6	14 (1.4, 10)	Apply engine oil to the threads.
Cylinder head bolt	4	10	51 (5.2, 38)	Apply engine oil to the threads and seating surface.
Insulator band screw (cylinder head side)	1	–	See page 9-29	

CLUTCH/KICKSTARTER/GEARSHIFT LINKAGE

ITEM	Q'TY	THREAD DIA. (mm)	TORQUE N·m (kgf·m, lbf·ft)	REMARKS
Gearshift drum center pin	1	8	22 (2.2, 16)	Apply locking agent to the threads (page 11-23).
Gearshift drum stopper arm bolt	1	6	12 (1.2, 9)	
Clutch center lock nut	1	18	80 (8.2, 59)	Apply engine oil to the threads and seating surfaces.
Clutch spring bolt	4	6	12 (1.2, 9)	
Clutch cover bolt	5	6	10 (1.0, 7)	
Gearshift return spring pin	1	8	22 (2.2, 16)	
Gearshift pedal pinch bolt	1	6	12 (1.2, 9)	
Kickstarter pedal bolt	1	8	38 (3.9, 28)	

ALTERNATOR

ITEM	Q'TY	THREAD DIA. (mm)	TORQUE N·m (kgf·m, lbf·ft)	REMARKS
Flywheel nut	1	12	64 (6.5, 47)	Apply engine oil to the threads and seating surfaces.
CKP sensor mounting bolt	4	5	5.2 (0.5, 3.8)	Apply locking agent to the threads. Coating width: 4.5 ± 1.0 mm (0.18 ± 0.04 in)
Stator mounting socket bolt	3	5	5.2 (0.5, 3.8)	Apply locking agent to the threads. Coating width: 4.5 ± 1.0 mm (0.18 ± 0.04 in)
Left crankcase cover bolt	8	6	12 (1.2, 9)	

CRANKCASE/CRANKSHAFT/TRANSMISSION/BALANCER

ITEM	Q'TY	THREAD DIA. (mm)	TORQUE N·m (kgf·m, lbf·ft)	REMARKS
Crankshaft bearing set plate torx screw	2	6	22 (2.2, 16)	Apply locking agent to the threads (Pro Honda Hondalock 3 or equivalent high strength locking agent) (page 13-24).
Countershaft bearing set plate torx screw	2	6	12 (1.2, 9)	Apply locking agent to the threads. Coating width: 3.5 ± 1.0 mm (0.14 ± 0.04 in)
Cam chain tensioner bolt	1	6	12 (1.2, 9)	Apply locking agent to the threads (page 13-14).
Gearshift drum bearing set plate bolt	2	6	12 (1.2, 9)	Apply locking agent to the threads.
Mainshaft bearing set plate bolt	2	6	12 (1.2, 9)	Apply locking agent to the threads.
Balancer shaft bearing set plate bolt	1	6	10 (1.0, 7)	Apply locking agent to the threads (page 13-13).
Drive sprocket bolt	1	8	31 (3.2, 23)	
Primary drive gear bolt	1	12	108 (11.0, 80)	Apply engine oil to the threads.
Balancer shaft lock nut	1	12	36 (3.7, 27)	Apply engine oil to the threads.
Oil jet bolt	1	6	10 (1.0, 7)	Apply locking agent to the threads (page 13-30).

FRONT WHEEL/SUSPENSION/STEERING

ITEM	Q'TY	THREAD DIA. (mm)	TORQUE N·m (kgf·m, lbf·ft)	REMARKS
Front axle nut	1	16	88 (9.0, 65)	
Axle holder bolt	4	8	20 (2.0, 15)	
Front brake disc nut	6	6	16 (1.6, 12)	U-nut
Front brake hose guide bolt	1	6	5.2 (0.5, 3.8)	
Steering stem nut	1	26	108 (11.0, 80)	
Steering stem adjusting nut	1	30	See page 14-52	
Fork top bridge pinch bolt	4	8	22 (2.2, 16)	
Fork bottom bridge pinch bolt	4	8	20 (2.0, 15)	
Fork cap	2	42	28 (2.9, 21)	
Fork center bolt	2	22	55 (5.6, 41)	Apply locking agent to the threads.
Fork center bolt lock nut	2	12	29 (3.0, 21)	
Plug bolt	2	5	1.2 (0.1, 0.9)	
Fork damper	2	51	30 (3.1, 22)	
Fork protector mounting bolt	6	6	7.0 (0.7, 5.2)	Apply locking agent to the threads.
Front brake disc cover bolt	1	6	13 (1.3, 10)	
Handlebar upper holder bolt	4	8	22 (2.2, 16)	
Handlebar lower holder nut	2	10	44 (4.5, 32)	U-nut
Clutch lever pivot bolt	1	6	See page 14-53	Apply grease to the sliding surface.
Clutch lever pivot nut	1	6	10 (1.0, 7)	U-nut
Engine stop switch screw	1	4	1.5 (0.2, 1.1)	
Steering damper mounting bolt	2	7	20 (2.0, 15)	Apply locking agent to the threads.

REAR WHEEL/SUSPENSION

ITEM	Q'TY	THREAD DIA. (mm)	TORQUE N·m (kgf·m, lbf·ft)	REMARKS
Rear axle nut	1	22	128 (13.1, 94)	U-nut
Rear brake disc nut	4	6	16 (1.6, 12)	U-nut
Rear brake hose guide screw	6	5	1.2 (0.1, 0.9)	
Driven sprocket nut	6	8	32 (3.3, 24)	U-nut
Rear wheel bearing retainer	1	50	44 (4.5, 32)	Peen.
Swingarm pivot nut	1	14	88 (9.0, 65)	U-nut
Shock arm nut (swingarm side)	1	12	53 (5.4, 39)	Apply molybdenum oil solution to the threads and seating surfaces. U-nut
Shock arm nut (shock link side)	1	12	53 (5.4, 39)	Apply molybdenum oil solution to the threads and seating surfaces. U-nut
Shock link nut (frame side)	1	12	53 (5.4, 39)	Apply molybdenum oil solution to the threads and seating surfaces. U-nut
Shock absorber upper mounting nut	1	10	44 (4.5, 32)	U-nut
Shock absorber lower mounting nut	1	10	44 (4.5, 32)	U-nut
Shock absorber spring adjuster lock nut	1	60	28 (2.9, 21)	
Drive chain slider screw	3	5	4.2 (0.4, 3.1)	Apply locking agent to the threads.
Drive chain lower roller nut	1	6	12 (1.2, 9)	U-nut
Drive chain guide mounting bolt/nut	3	6	12 (1.2, 9)	U-nut
Drive chain adjuster lock nut	2	8	27 (2.8, 20)	UBS nut
Shock absorber damper rod end nut	1	12	26 (2.7, 19)	Stake.
Shock absorber compression damping adjuster	1	28	30 (3.1, 22)	

HYDRAULIC BRAKE

ITEM	Q'TY	THREAD DIA. (mm)	TORQUE N·m (kgf·m, lbf·ft)	REMARKS
Brake hose oil bolt	4	10	34 (3.5, 25)	
Brake lever adjuster lock nut	1	5	5.9 (0.6, 4.4)	
Brake lever pivot nut	1	6	5.9 (0.6, 4.4)	
Brake lever pivot bolt	1	6	1.0 (0.1, 0.7)	Apply silicone grease to the sliding surface.
Front master cylinder reservoir cover screw	2	4	1.0 (0.1, 0.7)	
Front master cylinder holder bolt	2	6	9.9 (1.0, 7.3)	
Front brake caliper mounting bolt	2	8	30 (3.1, 22)	Apply locking agent to the threads.
Caliper bleed valve	2	8	5.4 (0.6, 4.0)	
Rear master cylinder mounting bolt	2	6	13 (1.3, 10)	
Rear master cylinder reservoir cover bolt	2	4	1.0 (0.1, 0.7)	
Front brake caliper pin bolt	1	8	22 (2.2, 16)	Apply locking agent to the threads.
Rear brake caliper pin bolt	1	12	27 (2.8, 20)	
Brake caliper pad pin	2	10	18 (1.8, 13)	
Front brake caliper pad pin plug	1	10	2.5 (0.3, 1.8)	
Front brake caliper bracket pin bolt	1	8	22 (2.2, 16)	Apply locking agent to the threads.
Rear brake caliper bracket pin bolt	1	8	12 (1.2, 9)	Apply locking agent to the threads.
Brake pedal pivot bolt	1	10	36 (3.7, 27)	Apply locking agent to the threads (page 16-30).
Rear master cylinder push rod lock nut	1	6	5.9 (0.6, 4.4)	

ELECTRICAL SYSTEM

ITEM	Q'TY	THREAD DIA. (mm)	TORQUE N·m (kgf·m, lbf·ft)	REMARKS
Timing hole cap	1	14	6.0 (0.6, 4.4)	Apply grease to the threads.

LUBRICATION & SEAL POINTS

ENGINE

MATERIAL	LOCATION	REMARKS
Use molybdenum oil solution (mixture of the engine oil and molybdenum grease with the ratio 100 g: 70 cc)	Camshaft lobes Rocker arm inner surface and valve slipper surfaces Decompressor plunger sliding area Decompressor weight Φ7 and Φ6.5 area Valve stem (valve guide sliding surfaces) Valve stem end sliding surface Valve lifter outer surface Clutch outer guide sliding surface Clutch lifter lever cam area (contact area of clutch lifter rod) Kickstarter spindle spline area and gear rolling area Kickstarter pinion gear inner surface Kickstarter idle gear inner surface Countershaft-to-idle gear bushing contact area Connecting rod big end bearing Connecting rod small end inner surface Mainshaft spline area and gear sliding surface Countershaft spline area and gear sliding surface Transmission gear sliding surfaces Shift fork claws and guide pins Shift fork shafts outer surface Each gear	
Engine oil	Injector seal ring and O-ring Plug hole seal ring outer surface Left crankshaft bearing oil seal contact surface Piston outer surface and piston pin hole Piston pin outer surface Piston rings Cylinder bore Clutch outer sliding area Clutch lifter piece needle bearing contact area Clutch disc linings surfaces Kickstarter spindle journal Gearshift drum guide grooves Oil pump rotors sliding area Each bearing Each O-ring	
Multi-purpose grease	Countershaft O-ring Each oil seal lips Oil filter spring (oil filter contact area)	
Locking agent	Oil guide plate mounting bolt threads Balancer shaft bearing set plate bolt threads 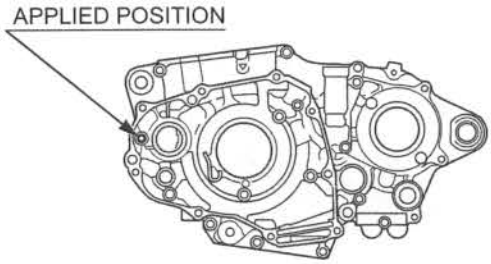	See page 13-13
Liquid sealant (TB1207B or equivalent)	Cylinder head cover breather plate contact area	See page 9-8
Liquid sealant	Alternator/CKP sensor wire grommet seating surface	

FRAME

MATERIAL	LOCATION	REMARKS
Multi-purpose grease	Wheel bearing dust seal lips Each wheel bearing cavity Kickstarter pedal joint sliding surface Axle shaft sliding surface Swingarm pivot bolt sliding surface Gearshift pedal pivot sliding area Rear shock absorber spherical bearing rolling area Clutch cable end adjuster threads Air cleaner element-to-air cleaner housing contacting area	Apply 3 – 5 g (0.1 – 0.2 oz).
Lithium based multi-purpose grease with extreme pressure (Shell Alvania EP2 or equivalent)	Brake pedal pivot bolt sliding surface Throttle pipe flange groove Throttle cable end (grip side) Clutch cable end adjuster inside surface Rear shock absorber dust seal lips Swingarm pivot needle bearing rolling area Swingarm pivot thrust bearing rolling area Swingarm pivot dust seal lips Shock linkage needle bearing rolling area Shock linkage dust seal lips Shock linkage side collar inside surfaces	
Urea based multi-purpose grease with extreme pressure (example: Kyodo Yushi EXCELITE EP2, Shell stamina EP2 or equivalent)	Steering head bearing rolling area Steering head dust seal lips Brake pedal dust seal lips	Apply 3 – 5 g (0.1 – 0.2 oz).
Silicone grease	Brake caliper pin sliding area Brake caliper bracket pin sliding area Brake caliper dust seal lips Brake caliper pad pin O-ring Front master cylinder push rod contact area Brake lever spring both ends Rear master cylinder push rod rounded surface and boot fitting area	
DOT4 brake fluid	Brake caliper piston seal lips Brake caliper piston outer surface Master cylinder inner surface Master piston outer surface	
Honda Bond A or Honda Handgrip Cement (U.S.A. only)	Handlebar grip rubber inner surface Air cleaner connecting boot contacting surface	
Cemedine #366 or equivalent	Air cleaner housing cover-to-air cleaner housing contacting surface	
KHL15-11 (KYB)	Fork cap O-rings Fork damper O-ring Fork center bolt O-rings Fork oil seal lips Fork dust seal lips Slider bushing Guide bushing	
Pro-Honda HP Fork oil 5W	Plug bolt O-ring End cap O-ring Free piston O-ring Damper rod O-ring	
KHV10-K2C (KYB)	Piston ring and O-rings Damper rod sliding surface Rod guide case O-ring Damper case inner surface Bladder lips Compression damping adjuster O-rings	

MATERIAL	LOCATION	REMARKS
Engine oil	Fuel pump O-ring whole surface	Apply 0.5 g (0.02 oz) max.
Muffler sealant (high temperature silicone)	Muffler body contact area (front pipe) Muffler body contact area (end cover) End cover contact area (inner pipe)	Apply 5.0 g (0.18 oz). Apply 5.0 g (0.18 oz). Apply 5.0 g (0.18 oz).

CABLE & HARNESS ROUTING

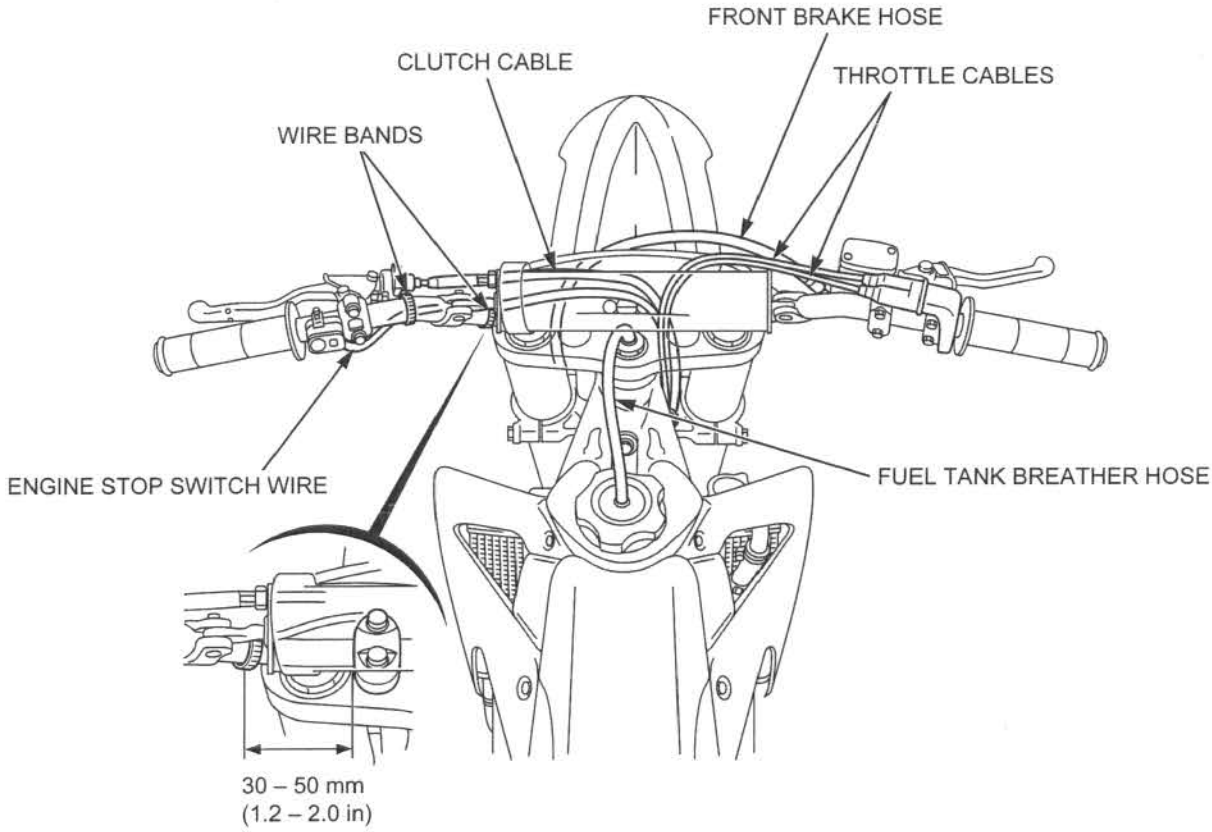

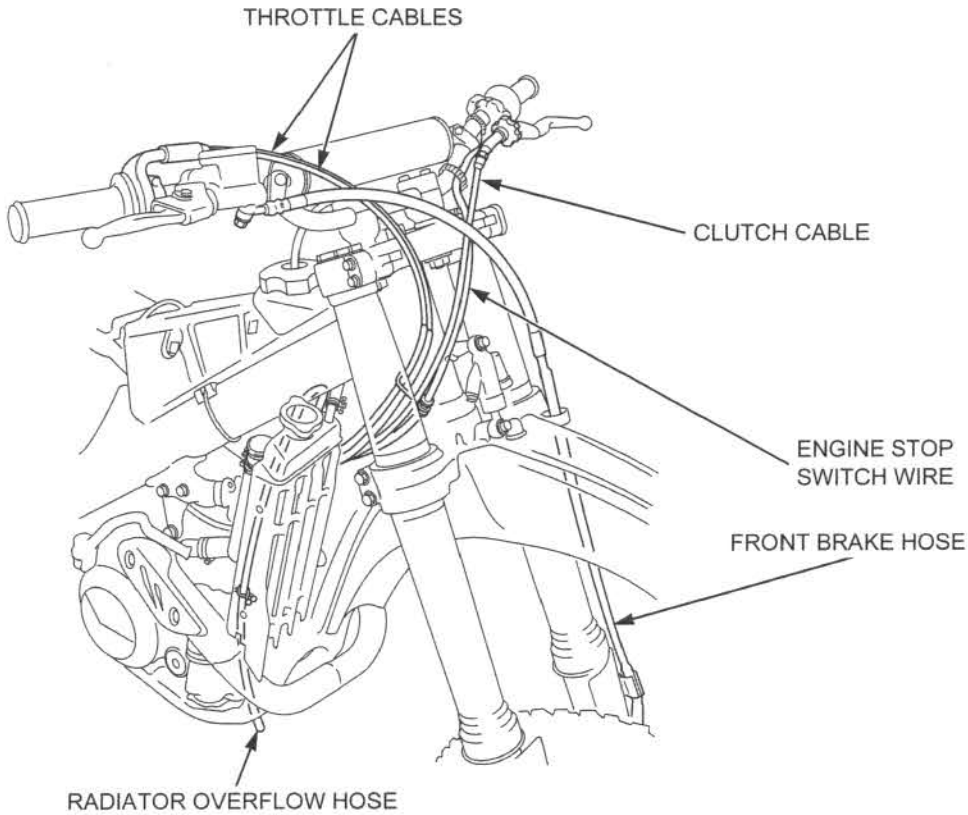

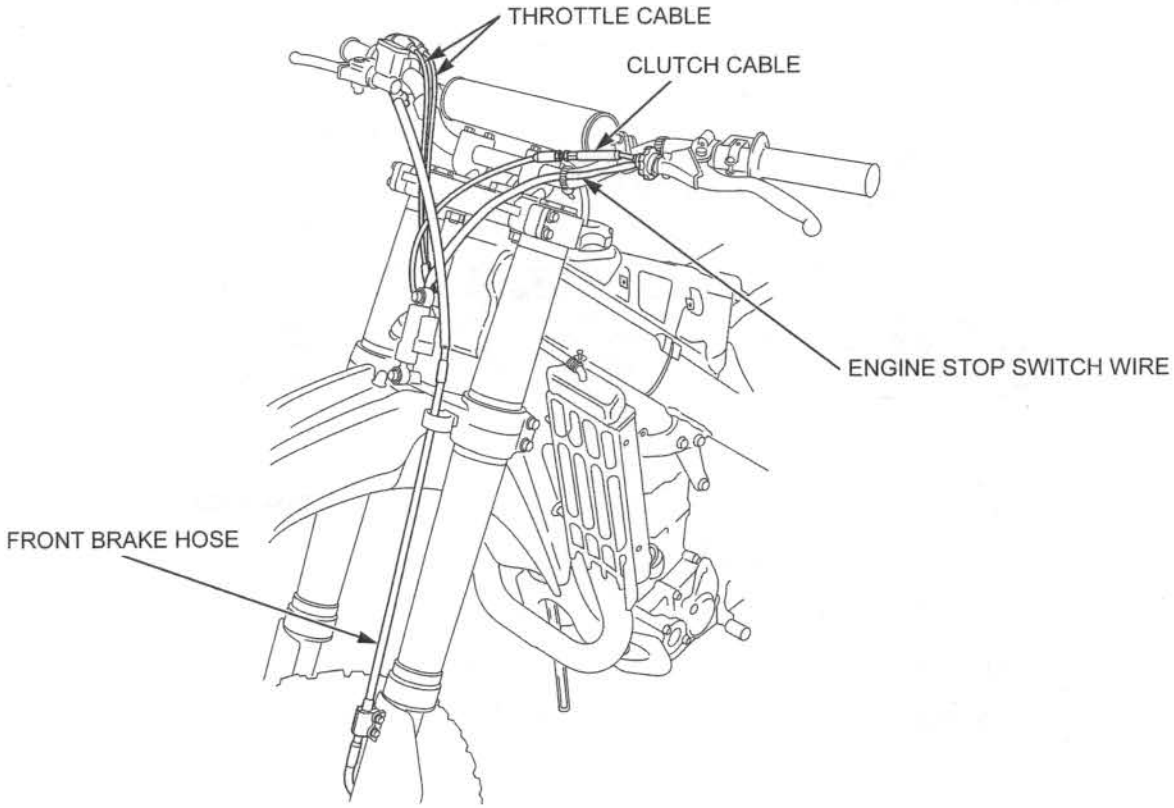
THROTTLE CABLE
CLUTCH CABLE
ENGINE STOP SWITCH WIRE
FRONT BRAKE HOSE

'09:

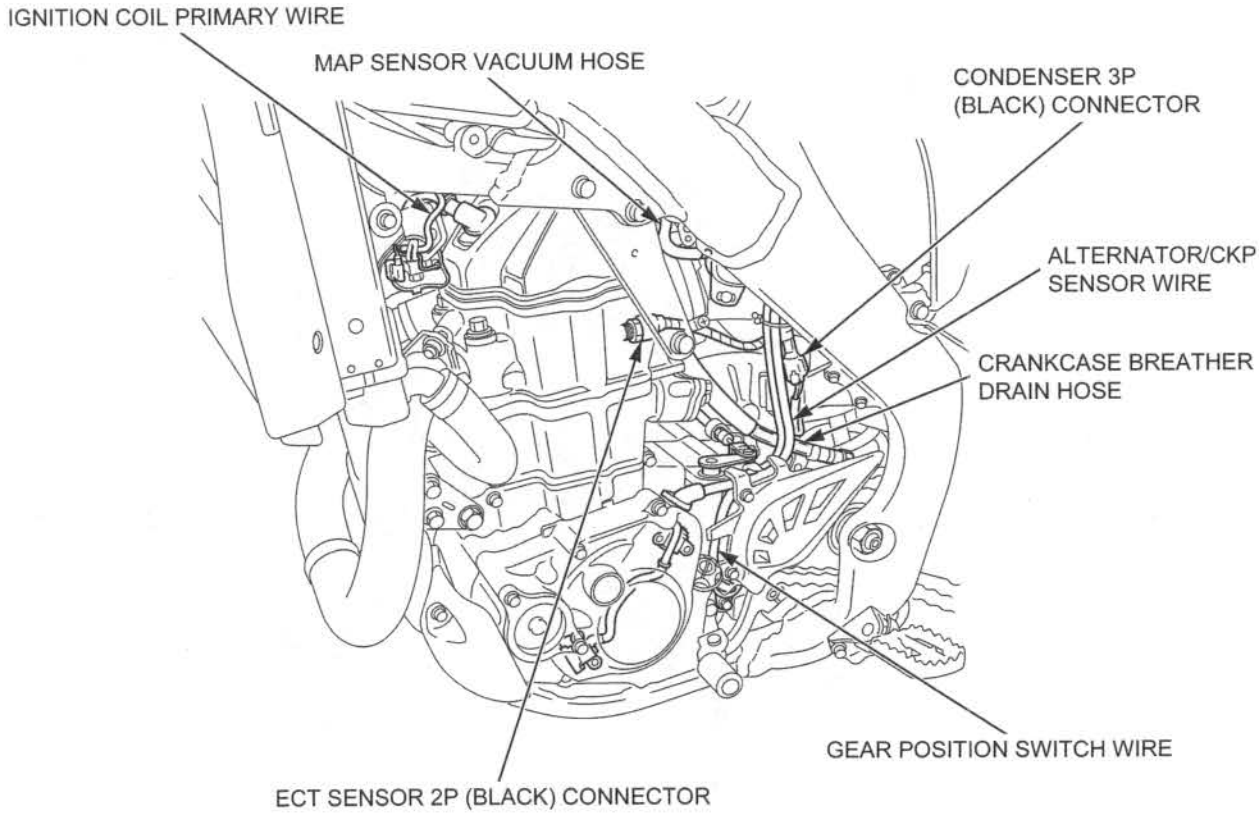
IGNITION COIL PRIMARY WIRE
MAP SENSOR VACUUM HOSE
CONDENSER 3P
(BLACK) CONNECTOR
ALTERNATOR/CKP
SENSOR WIRE
CRANKCASE BREATHER
DRAIN HOSE
GEAR POSITION SWITCH WIRE
ECT SENSOR 2P (BLACK) CONNECTOR

After '09:

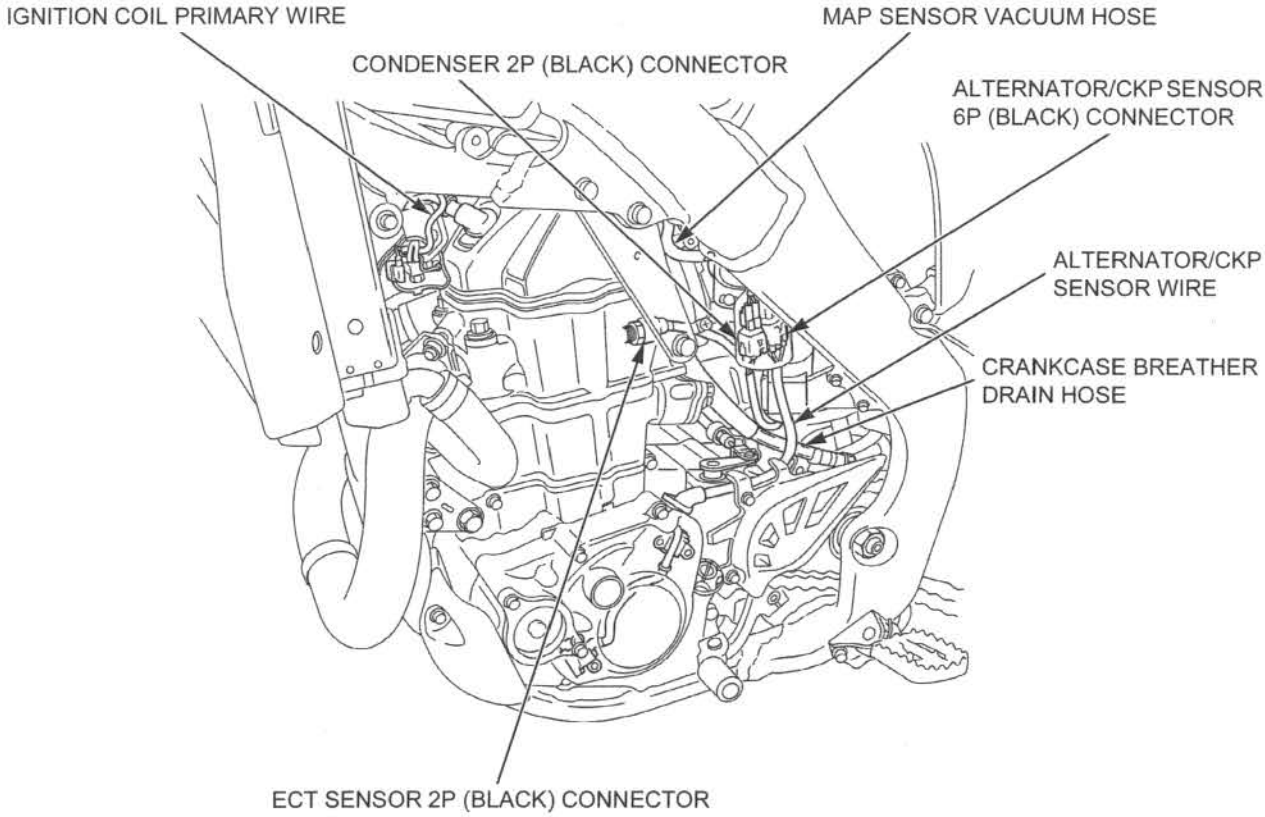
IGNITION COIL PRIMARY WIRE
MAP SENSOR VACUUM HOSE
CONDENSER 2P (BLACK) CONNECTOR
ALTERNATOR/CKP SENSOR
6P (BLACK) CONNECTOR
ALTERNATOR/CKP
SENSOR WIRE
CRANKCASE BREATHER
DRAIN HOSE
ECT SENSOR 2P (BLACK) CONNECTOR

'09:

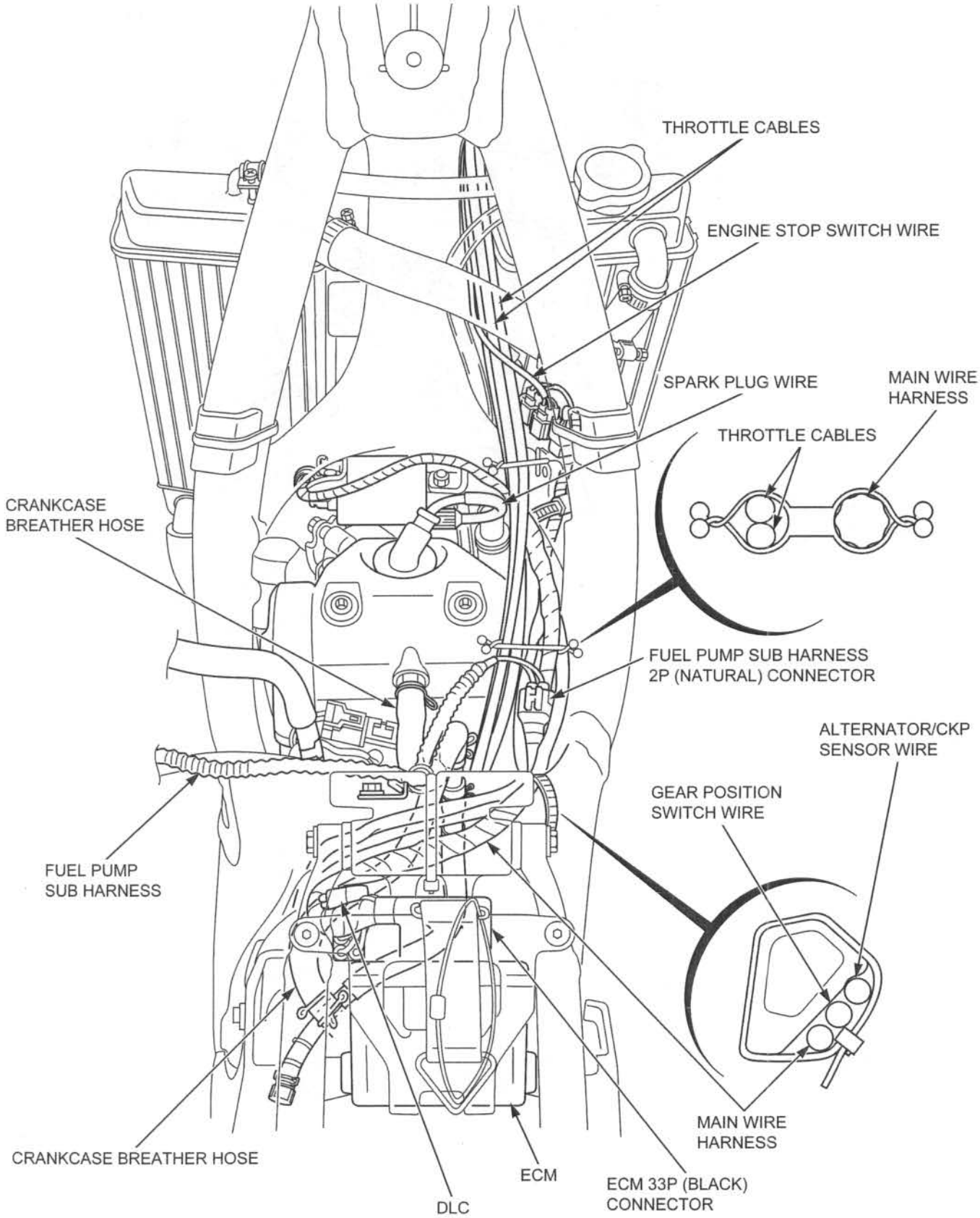
THROTTLE CABLES
ENGINE STOP SWITCH WIRE
SPARK PLUG WIRE
MAIN WIRE HARNESS
THROTTLE CABLES
CRANKCASE BREATHER HOSE
FUEL PUMP SUB HARNESS 2P (NATURAL) CONNECTOR
ALTERNATOR/CKP SENSOR WIRE
GEAR POSITION SWITCH WIRE
FUEL PUMP SUB HARNESS
MAIN WIRE HARNESS
CRANKCASE BREATHER HOSE
ECM
ECM 33P (BLACK) CONNECTOR
DLC

After '09:

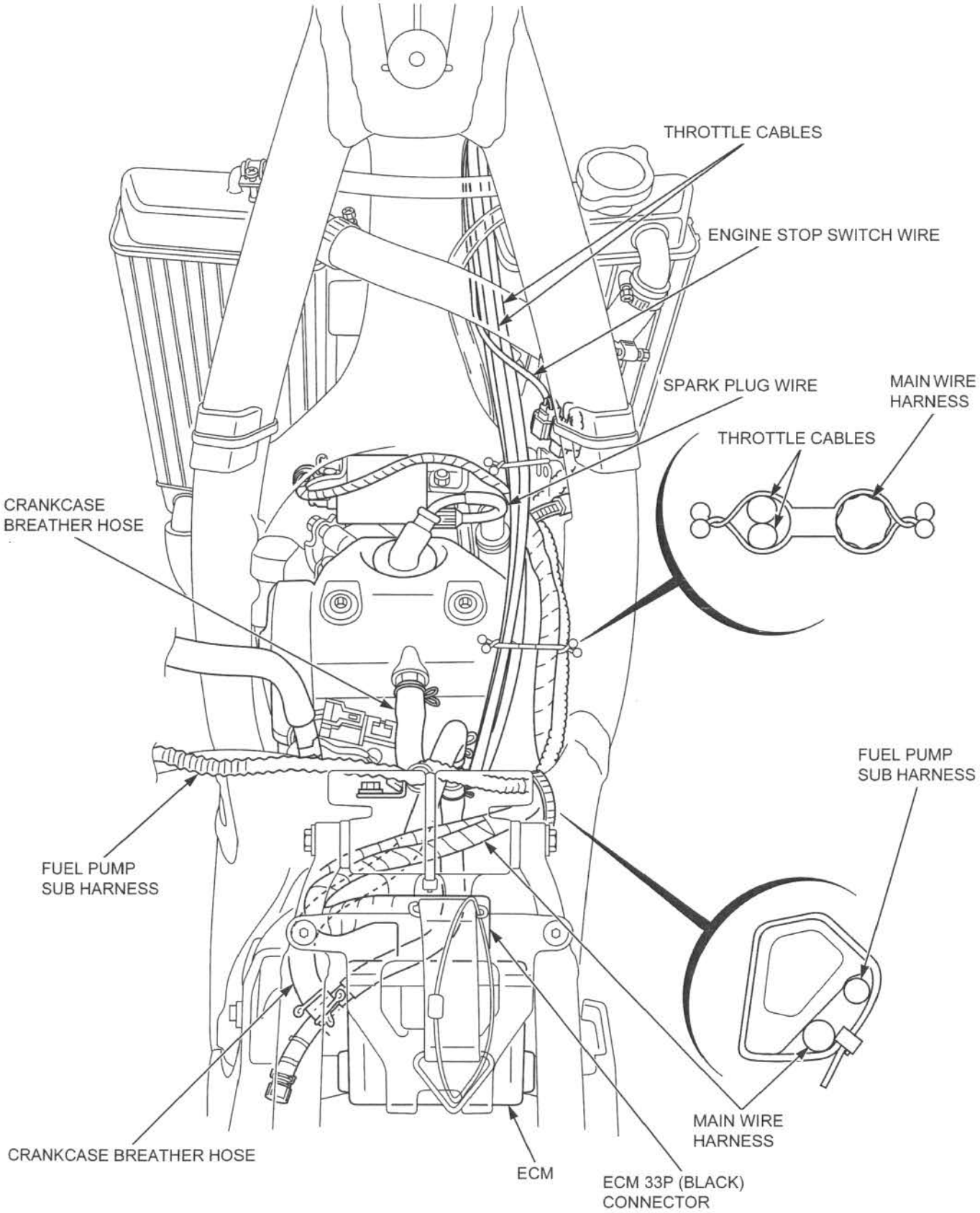
THROTTLE CABLES
ENGINE STOP SWITCH WIRE
SPARK PLUG WIRE
MAIN WIRE HARNESS
THROTTLE CABLES
CRANKCASE BREATHER HOSE
FUEL PUMP SUB HARNESS
FUEL PUMP SUB HARNESS
MAIN WIRE HARNESS
CRANKCASE BREATHER HOSE
ECM
ECM 33P (BLACK) CONNECTOR

'09:

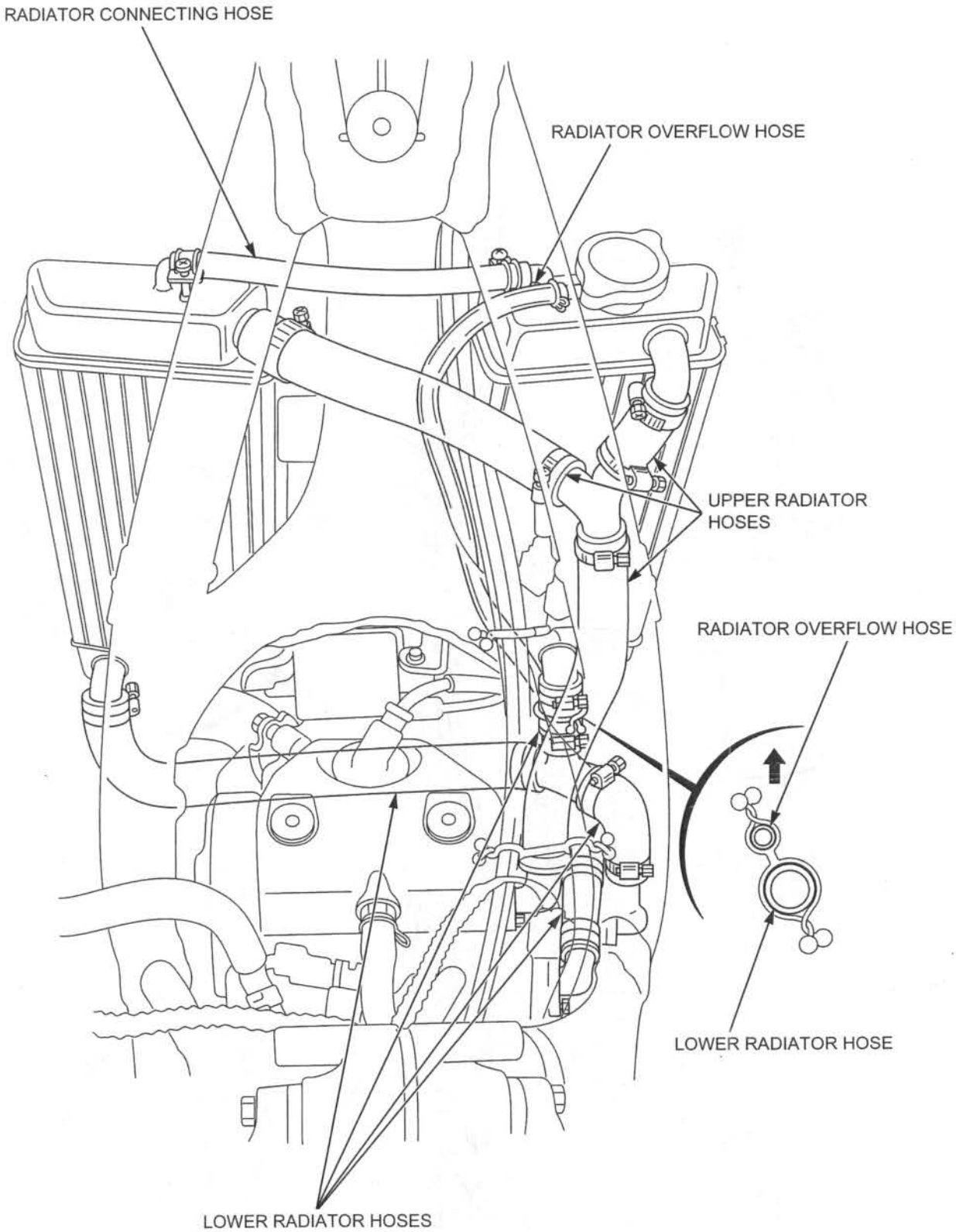
RADIATOR CONNECTING HOSE
RADIATOR OVERFLOW HOSE
UPPER RADIATOR HOSES
RADIATOR OVERFLOW HOSE
LOWER RADIATOR HOSE
LOWER RADIATOR HOSES

After '09:

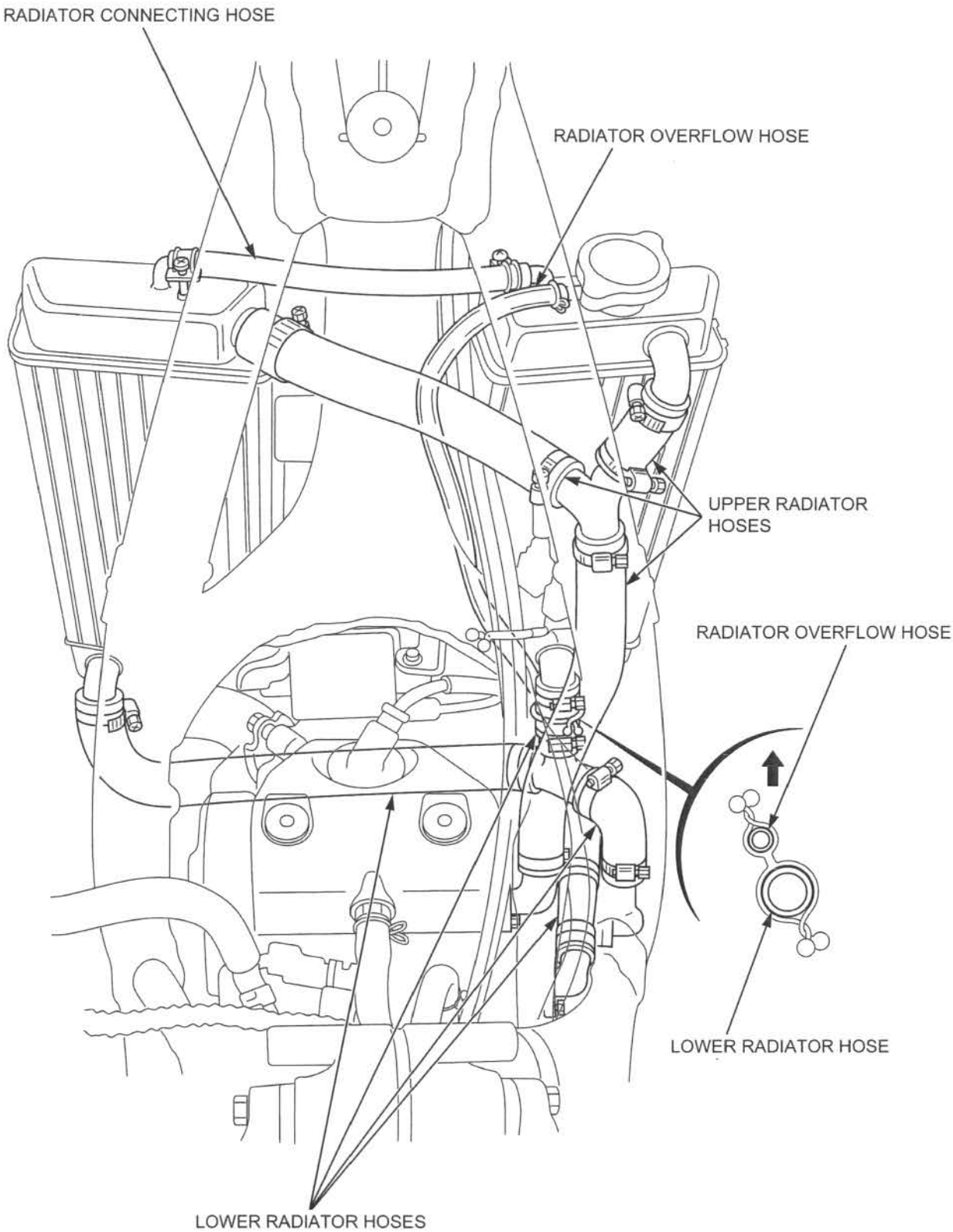
RADIATOR CONNECTING HOSE
RADIATOR OVERFLOW HOSE
UPPER RADIATOR HOSES
RADIATOR OVERFLOW HOSE
LOWER RADIATOR HOSE
LOWER RADIATOR HOSES

'09:

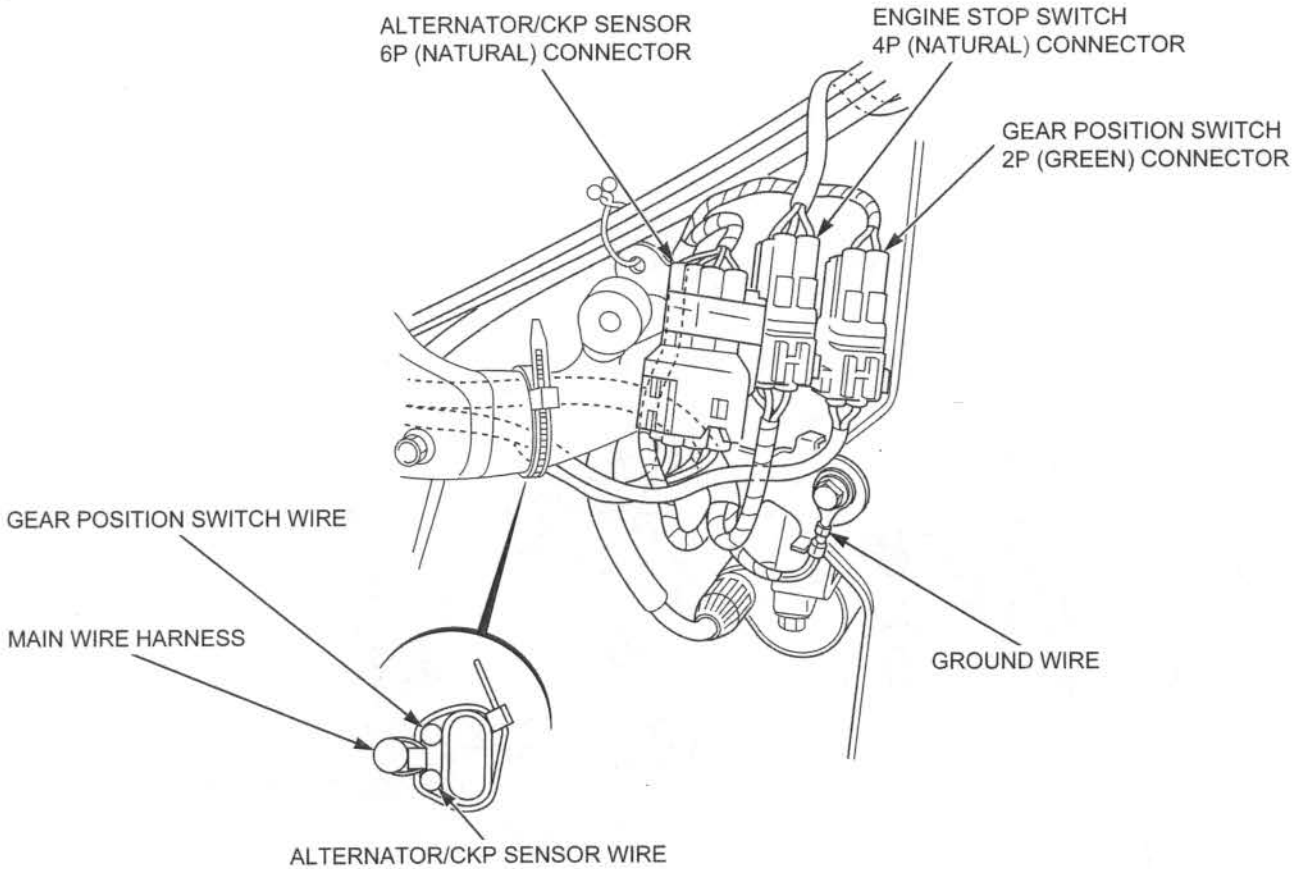
ALTERNATOR/CKP SENSOR
6P (NATURAL) CONNECTOR
ENGINE STOP SWITCH
4P (NATURAL) CONNECTOR
GEAR POSITION SWITCH
2P (GREEN) CONNECTOR
GEAR POSITION SWITCH WIRE
MAIN WIRE HARNESS
GROUND WIRE
ALTERNATOR/CKP SENSOR WIRE

After '09:

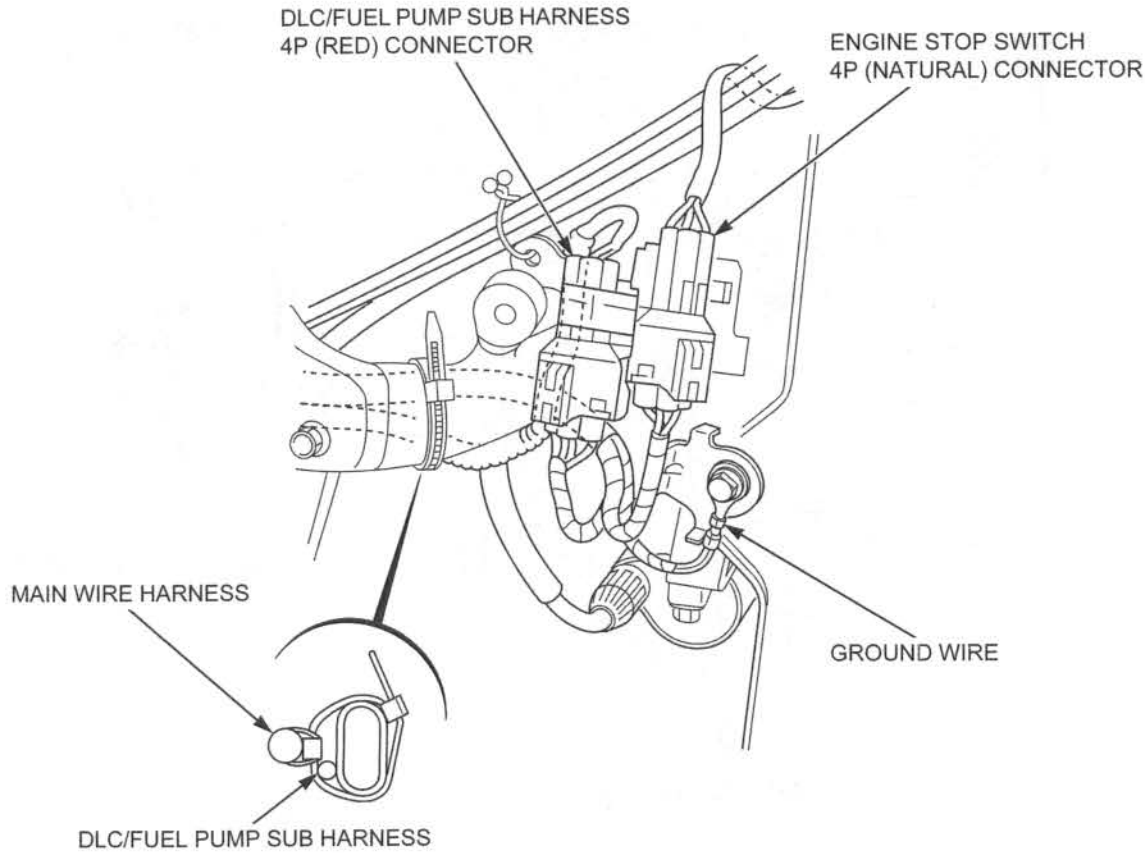
DLC/FUEL PUMP SUB HARNESS
4P (RED) CONNECTOR
ENGINE STOP SWITCH
4P (NATURAL) CONNECTOR
MAIN WIRE HARNESS
GROUND WIRE
DLC/FUEL PUMP SUB HARNESS

'09:

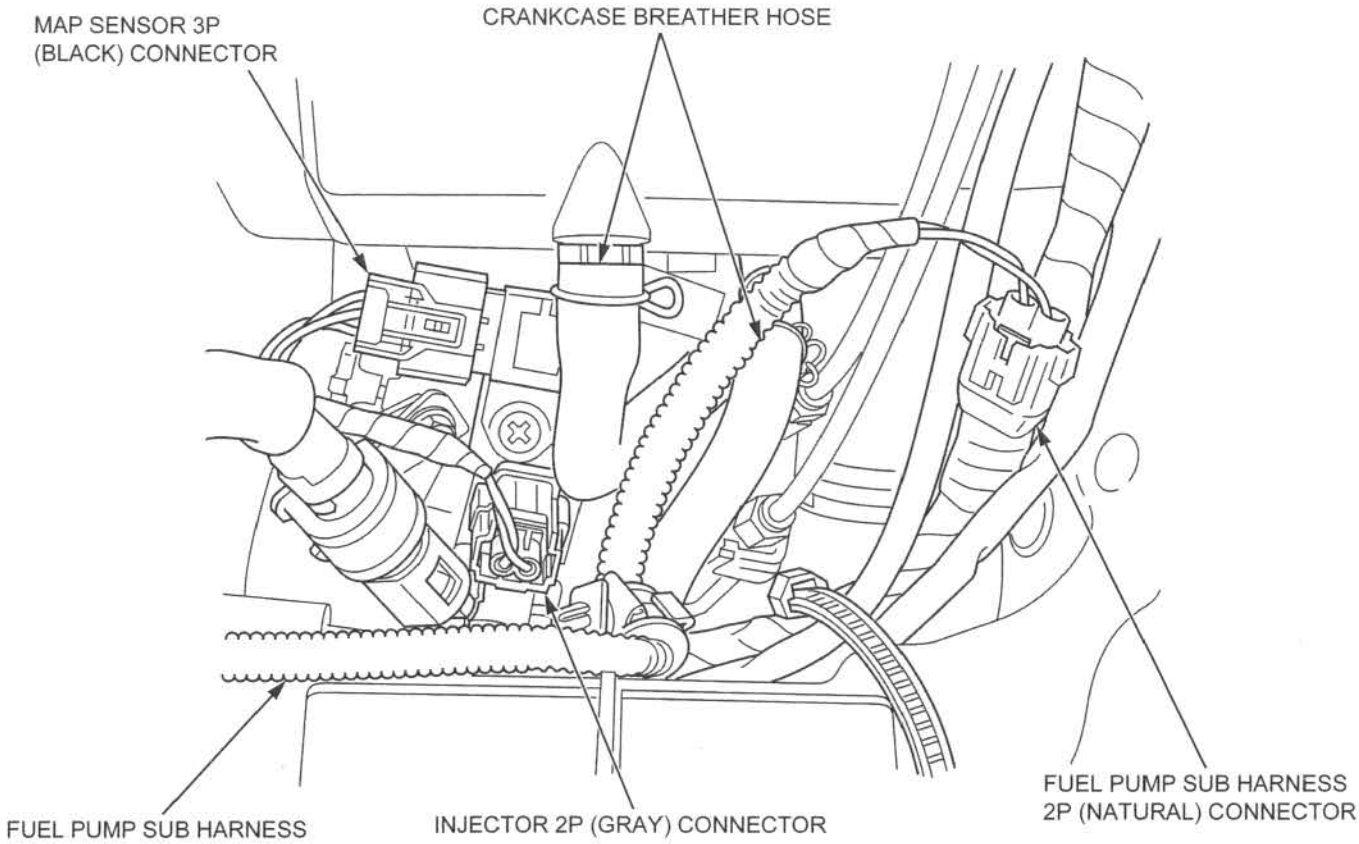
MAP SENSOR 3P
(BLACK) CONNECTOR
CRANKCASE BREATHER HOSE
FUEL PUMP SUB HARNESS
INJECTOR 2P (GRAY) CONNECTOR
FUEL PUMP SUB HARNESS
2P (NATURAL) CONNECTOR

After '09:

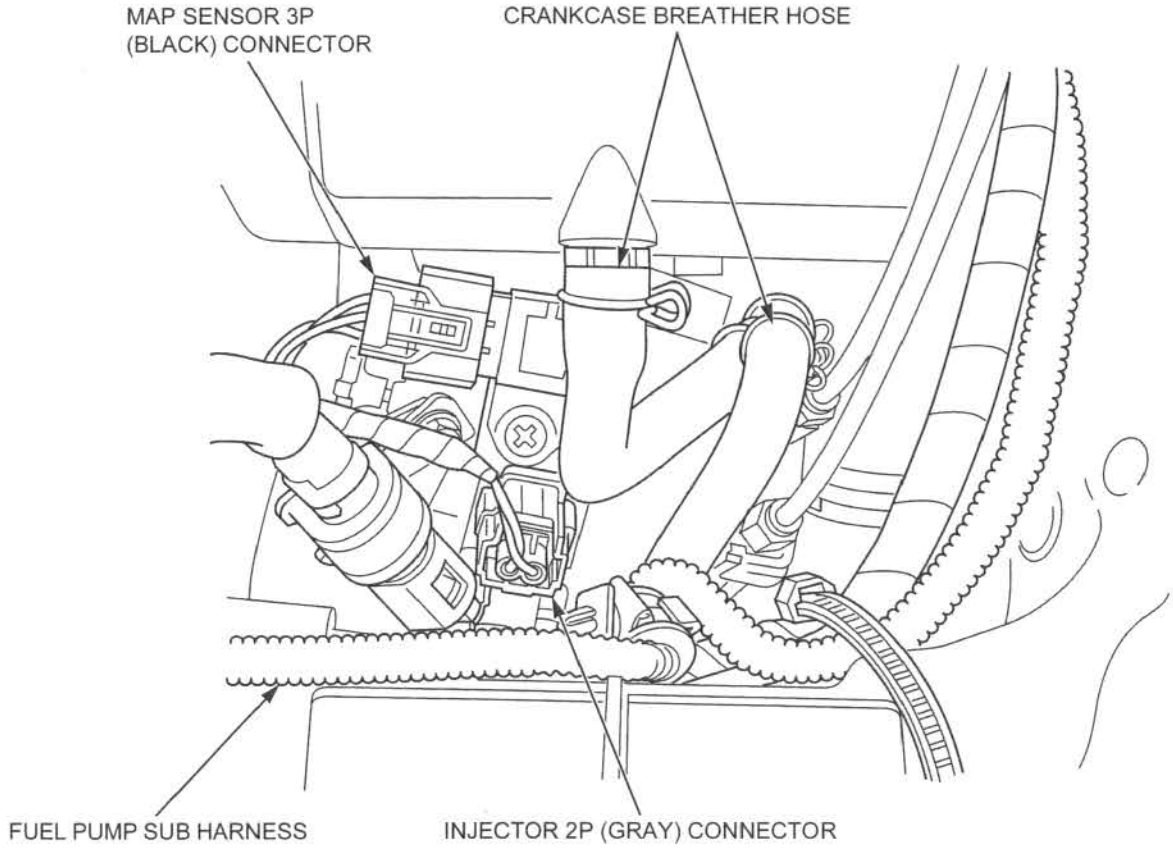
MAP SENSOR 3P
(BLACK) CONNECTOR
CRANKCASE BREATHER HOSE
FUEL PUMP SUB HARNESS
INJECTOR 2P (GRAY) CONNECTOR

'09:

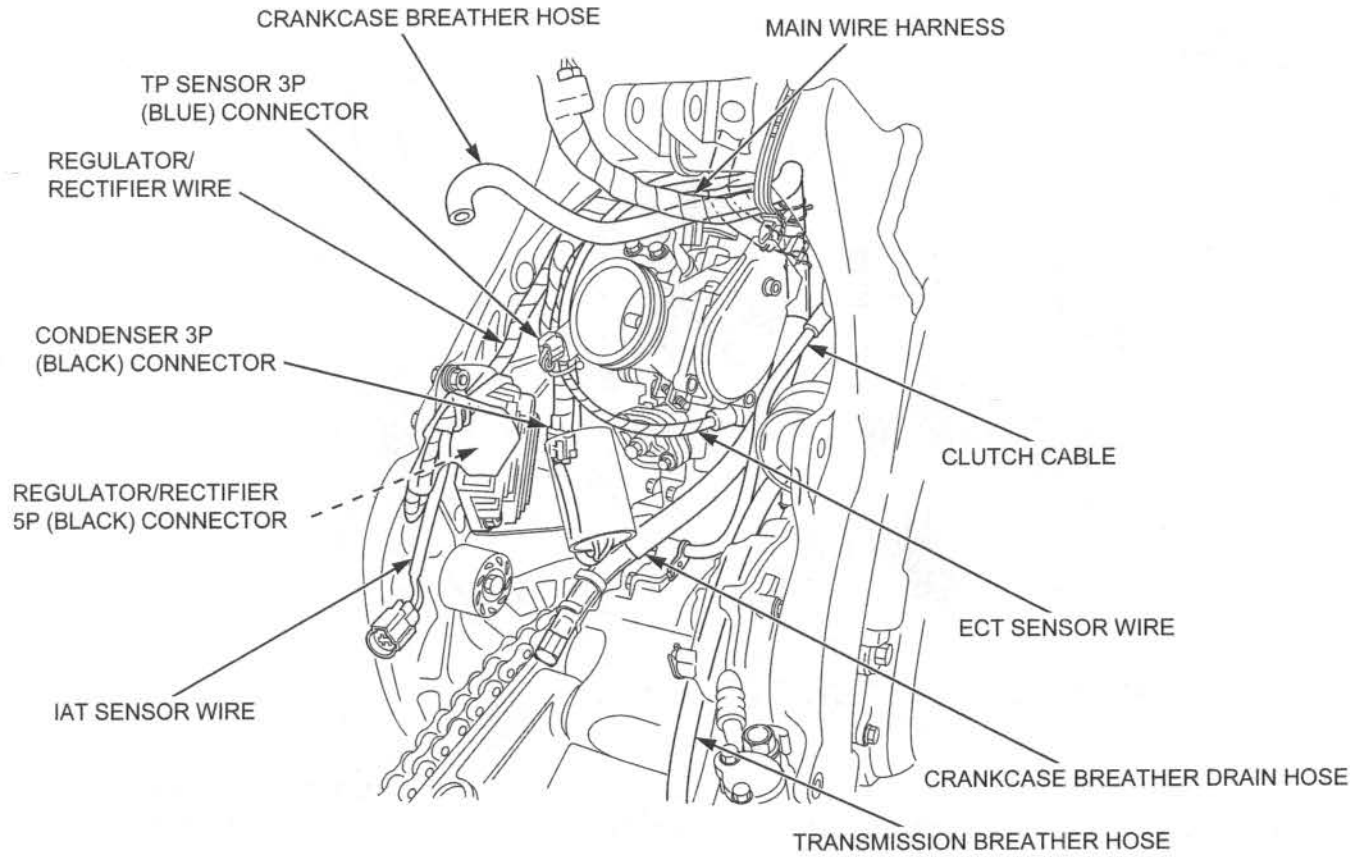
CRANKCASE BREATHER HOSE
MAIN WIRE HARNESS
TP SENSOR 3P
(BLUE) CONNECTOR
REGULATOR/
RECTIFIER WIRE
CONDENSER 3P
(BLACK) CONNECTOR
CLUTCH CABLE
REGULATOR/RECTIFIER
5P (BLACK) CONNECTOR
ECT SENSOR WIRE
IAT SENSOR WIRE
CRANKCASE BREATHER DRAIN HOSE
TRANSMISSION BREATHER HOSE

After '09:

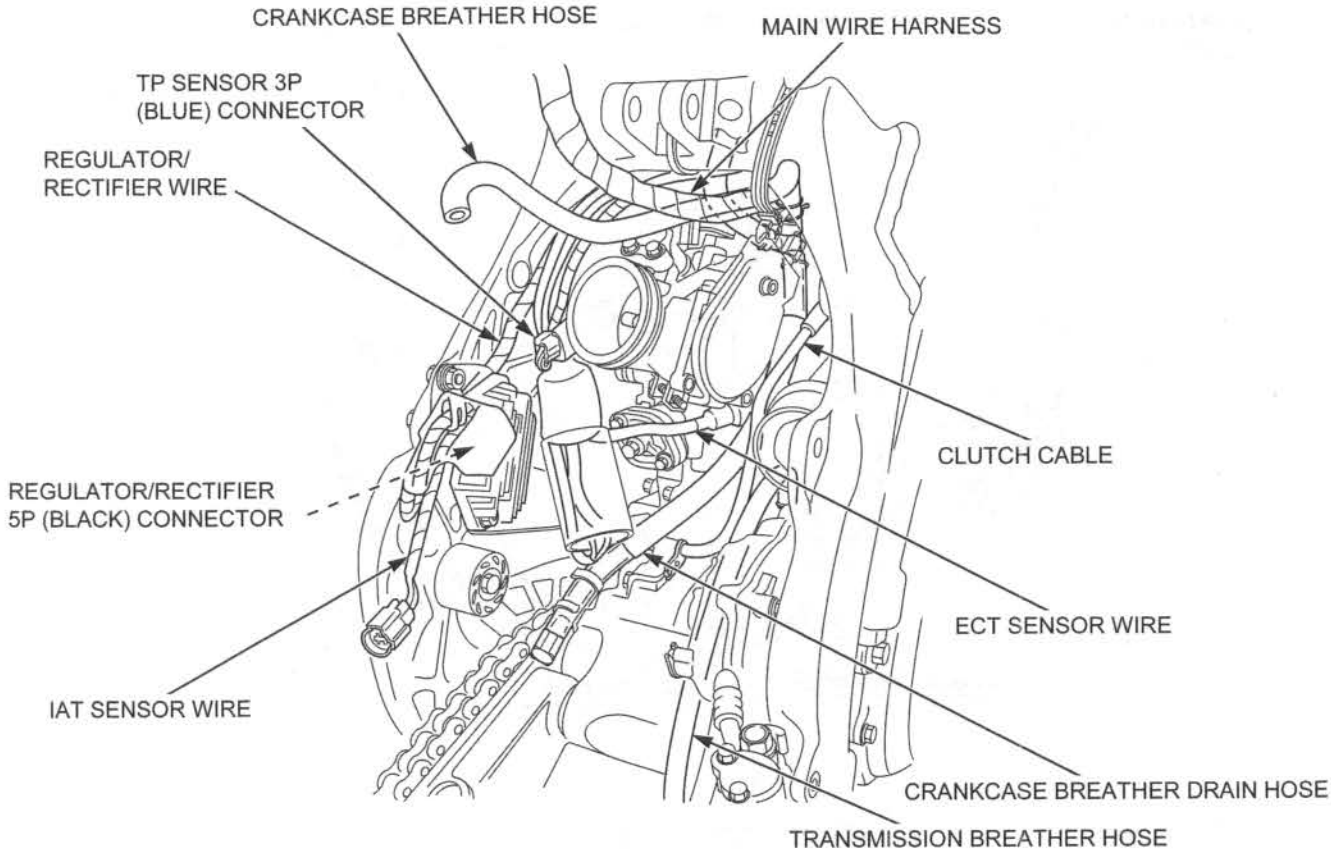
CRANKCASE BREATHER HOSE
MAIN WIRE HARNESS
TP SENSOR 3P
(BLUE) CONNECTOR
REGULATOR/
RECTIFIER WIRE
CLUTCH CABLE
REGULATOR/RECTIFIER
5P (BLACK) CONNECTOR
ECT SENSOR WIRE
IAT SENSOR WIRE
CRANKCASE BREATHER DRAIN HOSE
TRANSMISSION BREATHER HOSE

'09:

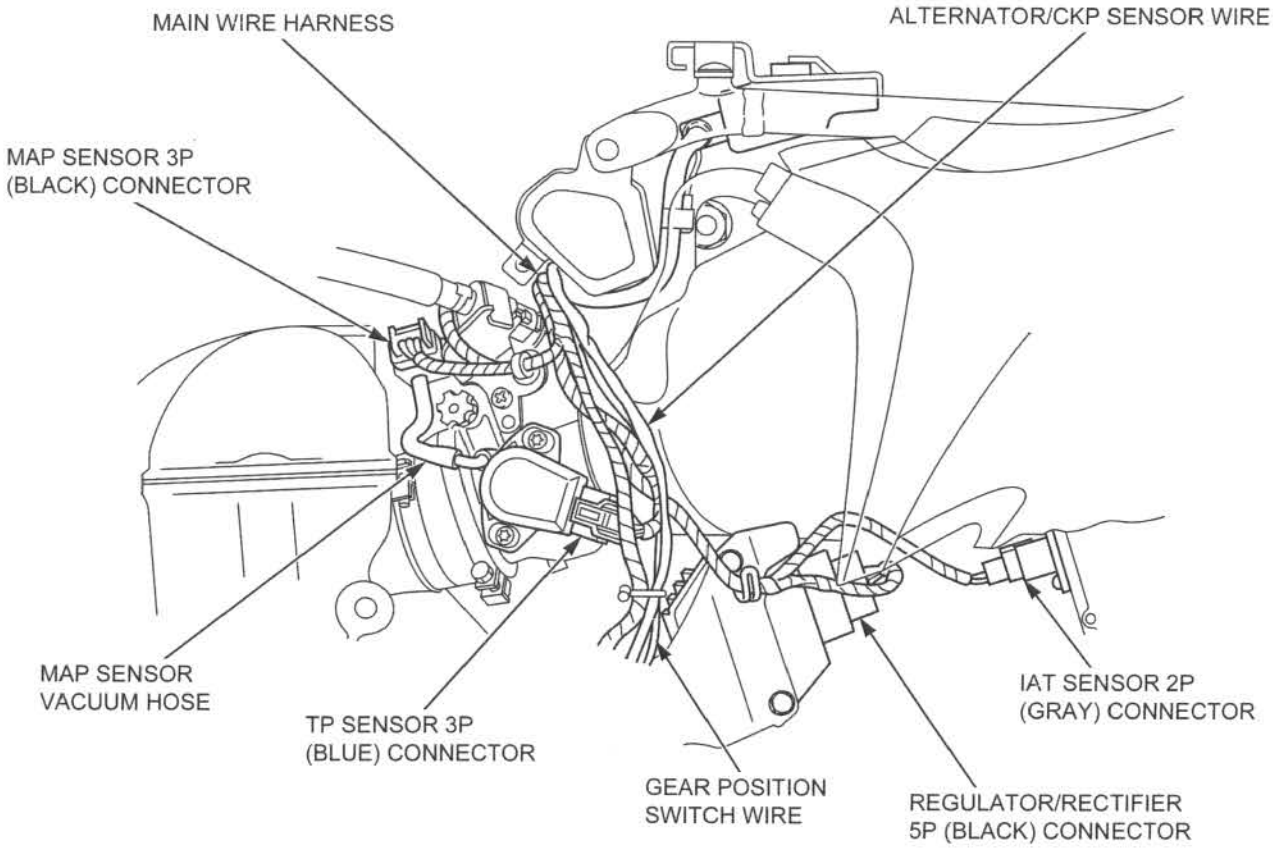
MAIN WIRE HARNESS
ALTERNATOR/CKP SENSOR WIRE
MAP SENSOR 3P
(BLACK) CONNECTOR
MAP SENSOR
VACUUM HOSE
TP SENSOR 3P
(BLUE) CONNECTOR
GEAR POSITION
SWITCH WIRE
IAT SENSOR 2P
(GRAY) CONNECTOR
REGULATOR/RECTIFIER
5P (BLACK) CONNECTOR

After '09:

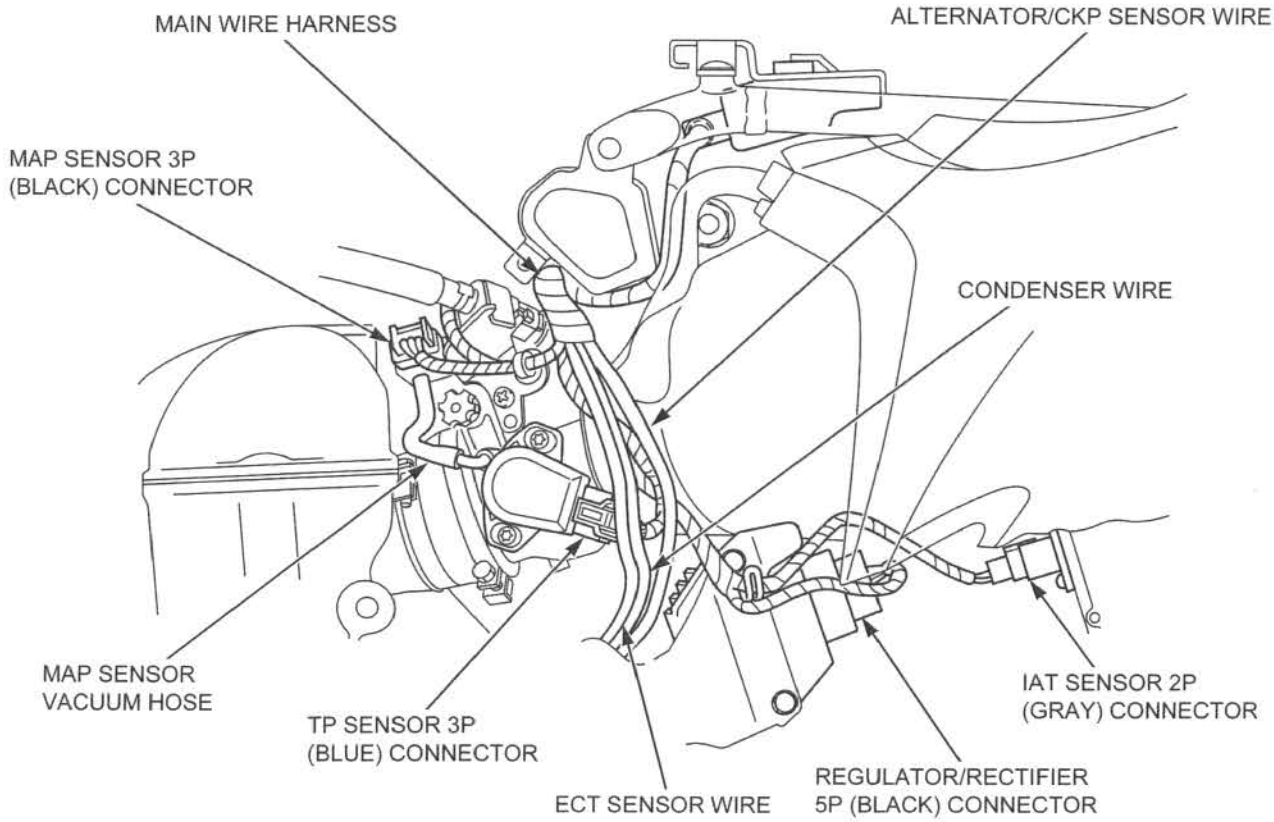
MAIN WIRE HARNESS
ALTERNATOR/CKP SENSOR WIRE
MAP SENSOR 3P
(BLACK) CONNECTOR
CONDENSER WIRE
MAP SENSOR
VACUUM HOSE
TP SENSOR 3P
(BLUE) CONNECTOR
ECT SENSOR WIRE
IAT SENSOR 2P
(GRAY) CONNECTOR
REGULATOR/RECTIFIER
5P (BLACK) CONNECTOR

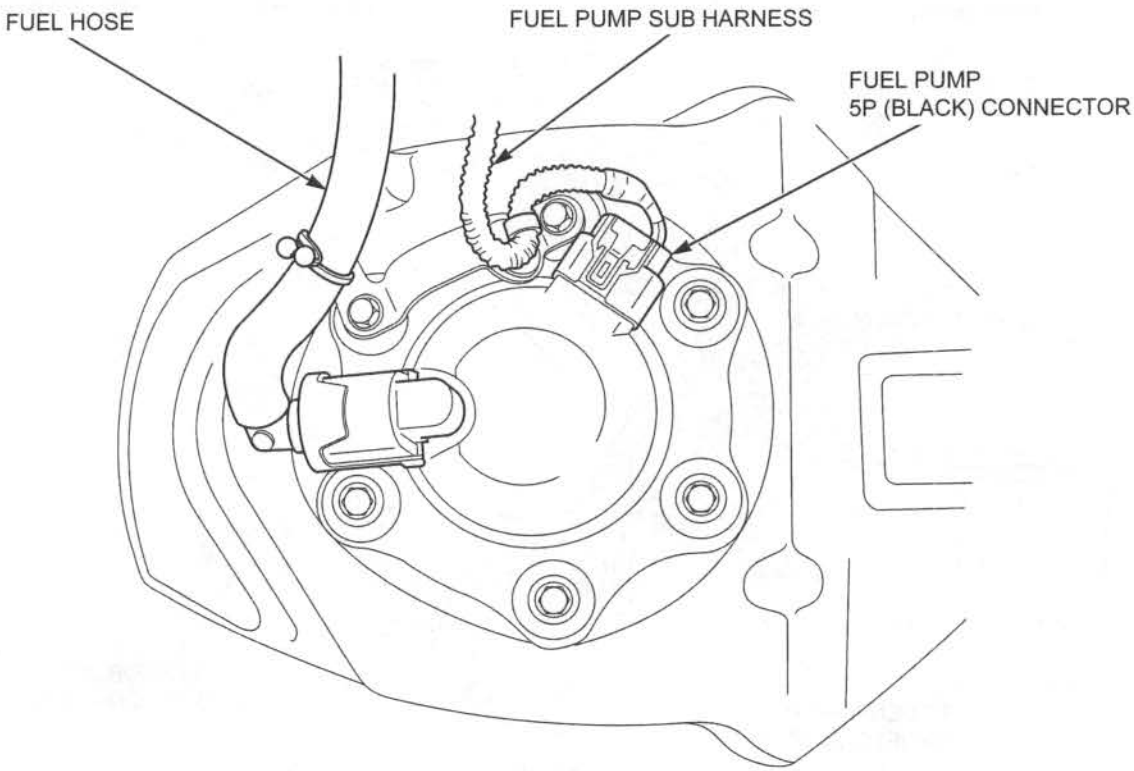
FUEL HOSE
FUEL PUMP SUB HARNESS
FUEL PUMP
5P (BLACK) CONNECTOR

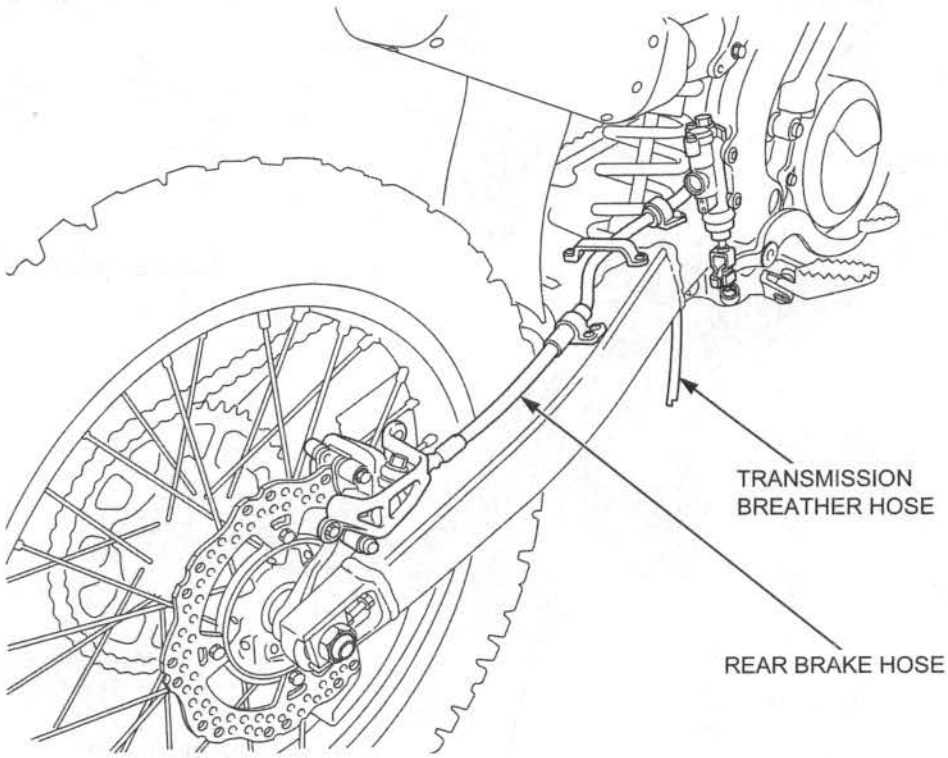
TRANSMISSION
BREATHER HOSE
REAR BRAKE HOSE

OPTIONAL PARTS

FRAME/ENGINE

ITEM		REMARKS
MAINTENANCE:		
Workstand		For maintenance
Pin spanner		Pin spanner A x 2 For shock absorber spring installed length (preload) adjustment (two required)
Air gauge		For checking tire air pressure
SPROCKET:		
Driven sprocket /chain link	Standard	48T (Aluminum)/116
	Optional	47T (Aluminum)/116 49T (Aluminum)/116
DRIVE CHAIN:		DID 520DMA4-120RB RK 520TXZ-120RJ
HANDLEBAR LOWER HOLDER:		
	Standard	3 mm offset
	Optional	no offset
SPARK PLUG:		
	Standard	SILMAR9A-9S (NGK)
	Optional	SILMAR10A-9S (NGK)

ITEM			REMARKS	
FORK ('09)				
Spring	**TYPE**		**SPRING RATE**	**OIL CAPACITY**
	Light	2 scribe marks	4.4 N/mm (25.12 lbf/in)	Standard 347 cm^3 (11.7 US oz, 12.2 Imp oz) Maximum 359 cm^3 (12.1 US oz, 12.6 Imp oz) Minimum 303 cm^3 (10.2 US oz, 10.7 Imp oz)
	Standard or	No mark (factory products) or 4 scribe marks (after market parts)	4.6 N/mm (26.27 lbf/in)	Standard 350 cm^3 (11.8 US oz, 12.3 Imp oz) Maximum 362 cm^3 (12.2 US oz, 12.7 Imp oz) Minimum 305 cm^3 (10.3 US oz, 10.7 Imp oz)
	Heavy	6 scribe marks	4.8 N/mm (27.41 lbf/in)	Standard 345 cm^3 (11.7 US oz, 12.1 Imp oz) Maximum 357 cm^3 (12.1 US oz, 12.6 Imp oz) Minimum 300 cm^3 (10.1 US oz, 10.6 Imp oz)
FORK (After '09)				
Spring	**TYPE**		**SPRING RATE**	**OIL CAPACITY**
	Light	2 scribe marks	4.4 N/mm (25.12 lbf/in)	Standard 352 cm^3 (11.9 US oz, 12.4 Imp oz) Maximum 359 cm^3 (12.1 US oz, 12.6 Imp oz) Minimum 303 cm^3 (10.2 US oz, 10.7 Imp oz)
	Standard or	No mark (factory products) or 4 scribe marks (after market parts)	4.6 N/mm (26.27 lbf/in)	Standard 355 cm^3 (12.0 US oz, 12.5 Imp oz) Maximum 362 cm^3 (12.2 US oz, 12.7 Imp oz) Minimum 305 cm^3 (10.3 US oz, 10.7 Imp oz)
	Heavy	6 scribe marks	4.8 N/mm (27.41 lbf/in)	Standard 350 cm^3 (11.8 US oz, 12.3 Imp oz) Maximum 357 cm^3 (12.1 US oz, 12.6 Imp oz) Minimum 300 cm^3 (10.1 US oz, 10.6 Imp oz)

ITEM		REMARKS	
SHOCK ABSORBER			
Spring	**TYPE**	**SPRING RATE**	**IDENTIFICATION MARK**
	Light 	52 N/mm (296.9 lbf/in)	Yellow paint
	Standard 	54 N/mm (308.3 lbf/in)	Pink paint
	Heavy 	56 N/mm (319.8 lbf/in)	White paint

The standard fork and shock springs mounted on the motorcycle when it leaves the factory are not marked. Before replacing the springs, be sure to mark them so they can be distinguished from other optional springs.

MEMO

2. TECHNICAL FEATURE

2

PGM-FI SYSTEM

The PGM-FI system consists of following parts:

'09 shown:

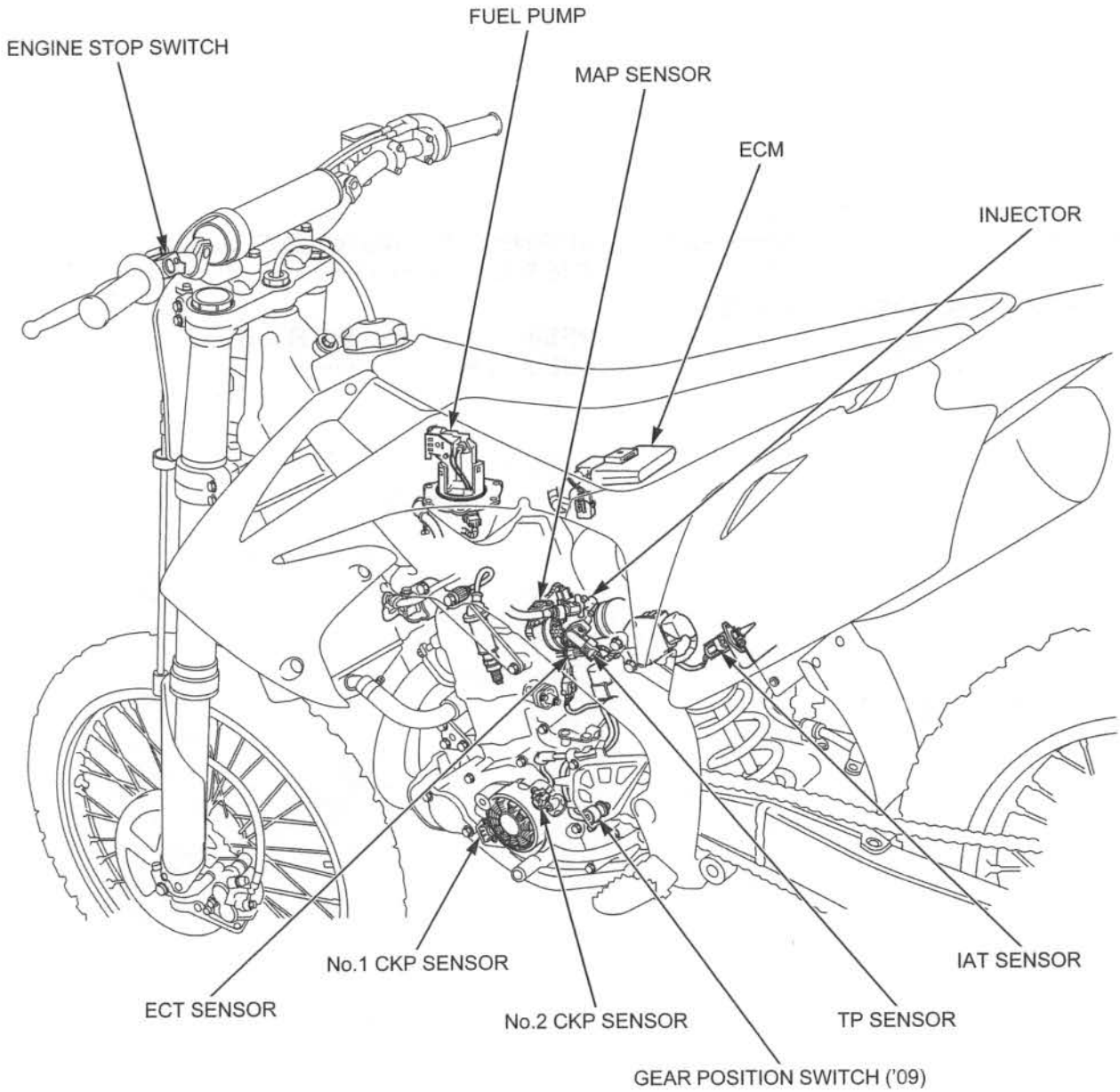

ECM AND SENSORS

The ECM and each sensor function as follows:

- **ECM**: controls the proper fuel injection and ignition parameters by calculating the data from the sensors linked to the ECM.
- **IAT sensor**: detects changes in the intake air temperature and sends the information to the ECM with variations in voltage.
- **MAP sensor**: detects changes in the intake air pressure and sends the information to the ECM with variations in voltage.
- **TP sensor:** detects the opening angle of the throttle and sends the information to the ECM with variations in voltage.
- **ECT sensor:** detects changes in the coolant temperature with a thermistor.
- **CKP sensors:** send crank angle information to the ECM for accurate ignition and injection operation. Two CKP sensors are used for highly accurate detecting of the crank angle and which allow the PGM-FI system to correctly coordinate ignition timing and fuel injection.

BATTERY-LESS PGM-FI KICKSTARTING SYSTEM

This motorcycle has a battery-less PGM-FI kickstarting system. Battery-less kickstarting system consists of the following parts:

- **CKP sensors:** sends crank angle information to the ECM.
- **Alternator:** generates the A.C. power during kickstarting.
- **Regulator/rectifier:** supplies D.C. power to the ECM, condenser and related components.
- **Condenser:** provides stable power to the components and suppresses injection dispersion at idle.

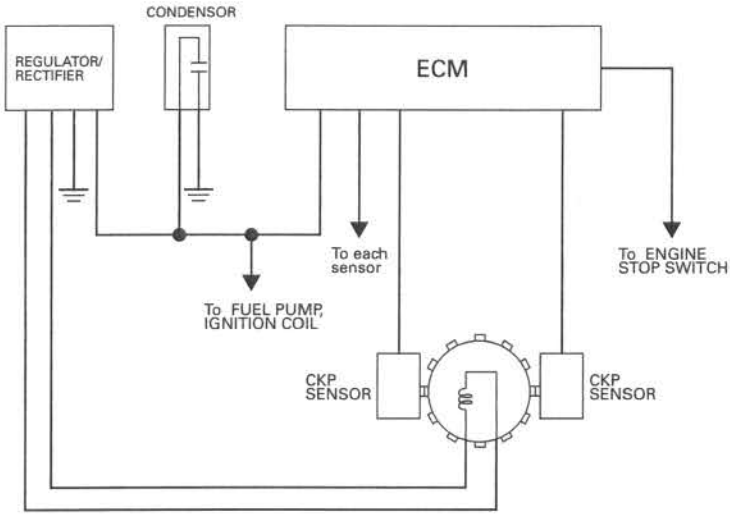

ENGINE STOP SWITCH INCLUDING THE MIL

OUTLINE

The engine stop switch on this motorcycle includes a MIL incorporated into this housing.
The condition of the PGM-FI system can be easily checked Pre-ride.

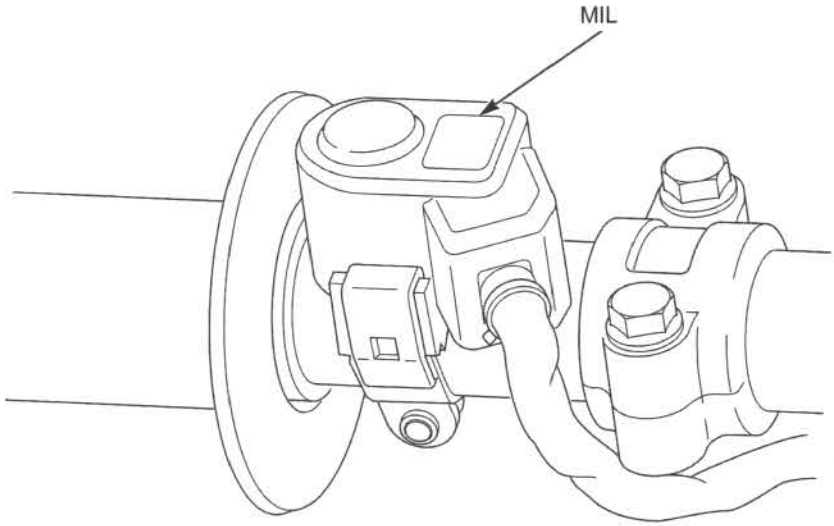

FUNCTION

D.C. power supply is applied to the MIL when the engine is running.
If a problem is not detected in the system, the MIL will stay on for 2 seconds, then go off. If the problem is detected, the MIL shows the appropriate problem code by blinking a DTC. For DTC index.

When the engine is stopped, the MIL can indicate the DTC, with connecting commercially available battery to the fuel pump sub harness.

RESIN FUEL TANK WITH A BUILT-IN FUEL PUMP

This motorcycle has a resin fuel tank with a built-in fuel pump.
The fuel pump is installed in the bottom of the fuel tank against the insert ring press fitted into the resin fuel tank. The pump is secured with conical spring washers and bolts.

Fuel pump unit consists of following parts:

(1): Fuel tank
(2): Insert ring
(3): Two O-rings
(4): Fuel pump
(5): Fuel pump plate
(6): Six conical spring washers
(7): Six collars
(8): Four washers
(9): Six M6 bolts
(10): Stopper cable guide

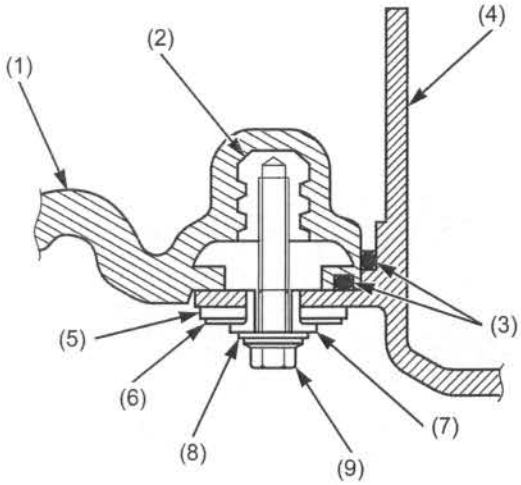

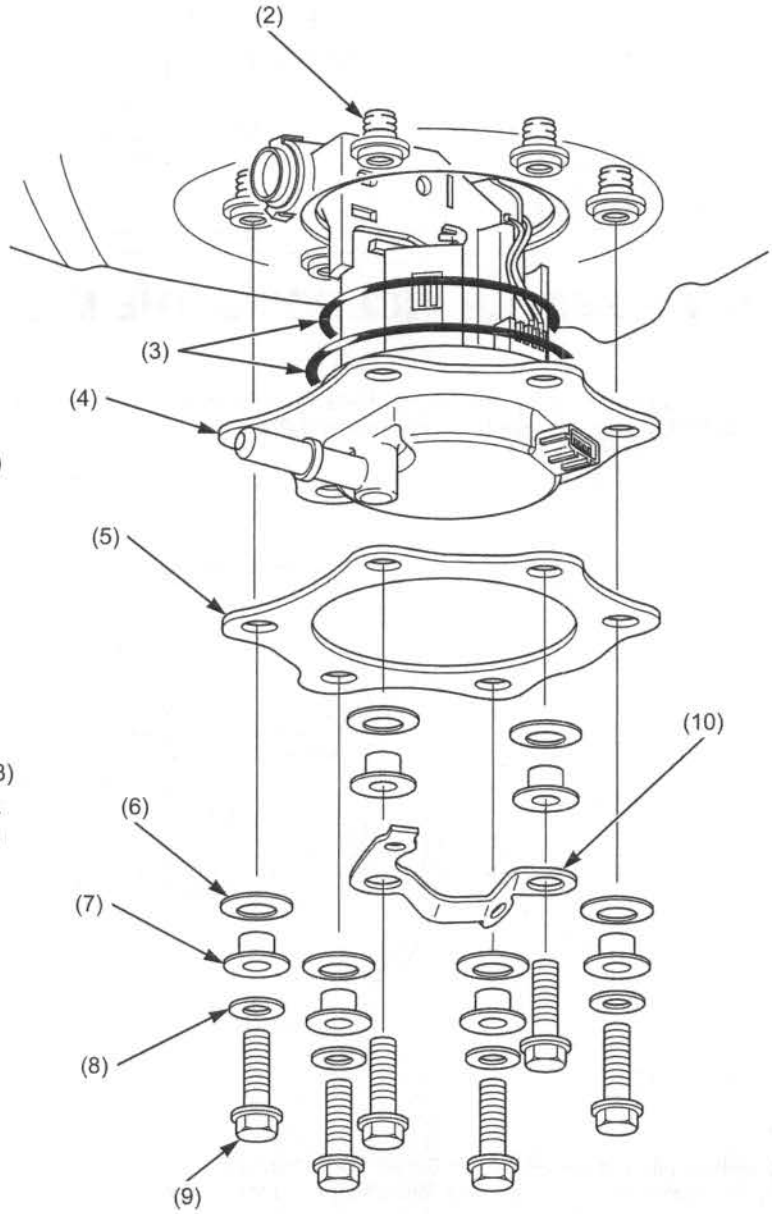

3. FRAME/BODY PANELS/EXHAUST SYSTEM

3

SERVICE INFORMATION

GENERAL

- Work in a well ventilated area. Smoking or allowing flames or sparks in the work area or where gasoline is stored can cause a fire or explosion.
- This section covers removal and installation of the body panels, sub-frame and exhaust system.
- Serious burns may result if the exhaust system is not allowed to cool before components are removed or serviced.
- Always replace the exhaust pipe gaskets after removing the exhaust pipe from the engine.
- When installing the exhaust system, loosely install all of the exhaust system fasteners. Always tighten the exhaust pipe joint nuts, then tighten the muffler mounting fasteners.
- Always inspect the exhaust system for leaks after installation.

TORQUE VALUES

Seat mounting bolt	26 N·m (2.7 kgf·m, 19 lbf·ft)
Side cover bolt	10 N·m (1.0 kgf·m, 7 lbf·ft)
Radiator shroud bolt (upper side)	5.0 N·m (0.5 kgf·m, 3.7 lbf·ft)
Engine guard bolt	10 N·m (1.0 kgf·m, 7 lbf·ft)
Sub-frame upper mounting bolt	33 N·m (3.4 kgf·m, 24 lbf·ft)
Sub-frame right lower mounting bolt	49 N·m (5.0 kgf·m, 36 lbf·ft)
Sub-frame left lower mounting bolt	33 N·m (3.4 kgf·m, 24 lbf·ft)
Exhaust pipe protector bolt	12 N·m (1.2 kgf·m, 9 lbf·ft)
Exhaust pipe protector band	3.0 N·m (0.3 kgf·m, 2.2 lbf·ft)
Exhaust pipe joint nut	21 N·m (2.1 kgf·m, 15 lbf·ft)
Muffler mounting bolt	26 N·m (2.7 kgf·m, 19 lbf·ft)
Muffler joint band bolt	21 N·m (2.1 kgf·m, 15 lbf·ft)
Exhaust pipe stud bolt	See page 3-11
Air cleaner connecting boot band bolt (throttle body side)	See page 3-8
Rear fender mounting bolt	13 N·m (1.3 kgf·m, 10 lbf·ft)

TROUBLESHOOTING

Excessive exhaust noise
- Broken exhaust system
- Exhaust gas leak

Poor performance
- Deformed exhaust system
- Exhaust gas leak
- Clogged muffler

SEAT

REMOVAL

Remove the seat mounting bolts.
Remove the seat by pulling it backward.

INSTALLATION

Align the seat hook with the seat bracket on the fuel tank and seat prong with the ECM stay.

Install and tighten the seat mounting bolts to the specified torque.

TORQUE: 26 N·m (2.7 kgf·m, 19 lbf·ft)

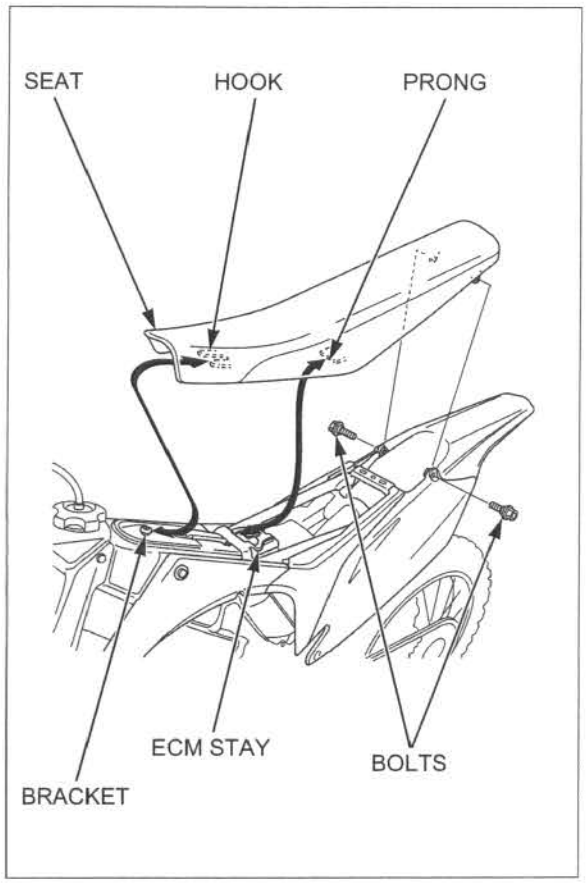

SIDE COVER

REMOVAL/INSTALLATION

Remove the seat mounting bolt.
Remove the side cover bolt and side cover.

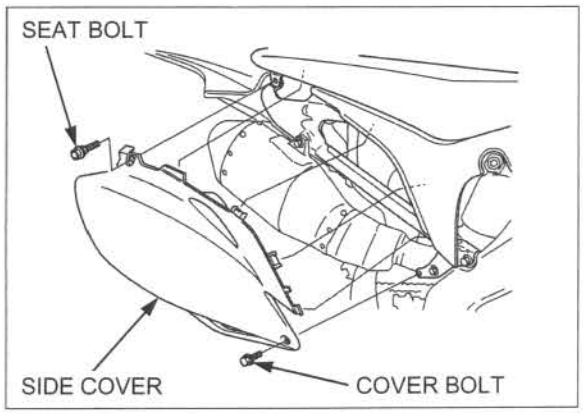

Be careful not to damage the tabs.

Install the side cover by inserting the side cover tabs into the air cleaner housing cover and seat as shown. Install and tighten the side cover bolt to the specified torque.

TORQUE: 10 N·m (1.0 kgf·m, 7 lbf·ft)

Install and tighten the seat mounting bolt to the specified torque.

TORQUE: 26 N·m (2.7 kgf·m, 19 lbf·ft)

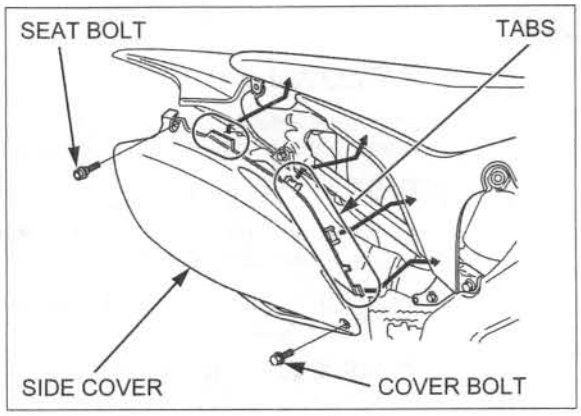

RADIATOR SHROUD

REMOVAL/INSTALLATION

Remove the bolts, collars and radiator shroud.

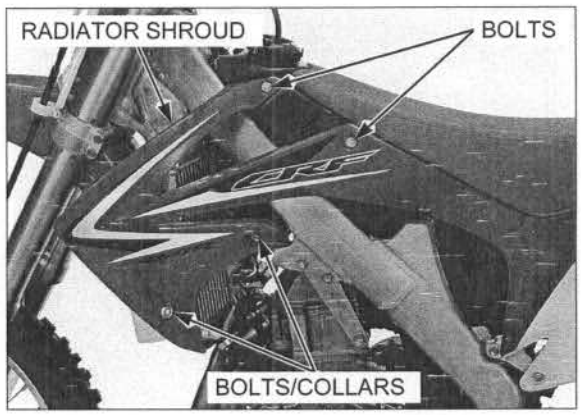

Install the radiator shroud by aligning its tab with the air cleaner housing cover slot.

Install the radiator shroud bolts and collars.

Tighten the upper side bolts to the specified torque.

TORQUE: 5.0 N·m (0.5 kgf·m, 3.7 lbf·ft)

Tighten the lower side bolts securely.

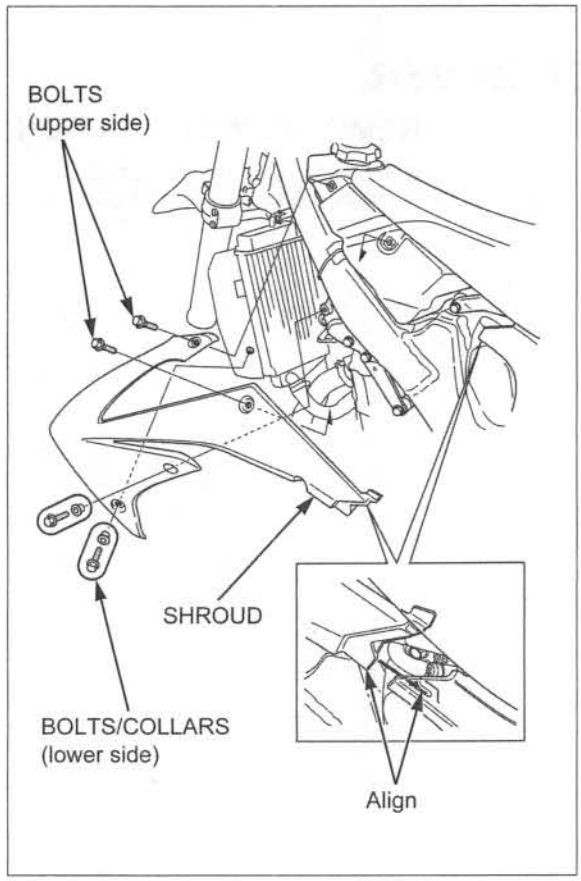

ENGINE GUARD

REMOVAL/INSTALLATION

Remove the bolt, collar and engine guard.

Installation is in the reverse order of removal.

NOTE:
Install the engine guard by hooking its tab onto the frame.

TORQUE:
Engine guard bolt:
10 N·m (1.0 kgf·m, 7 lbf·ft)

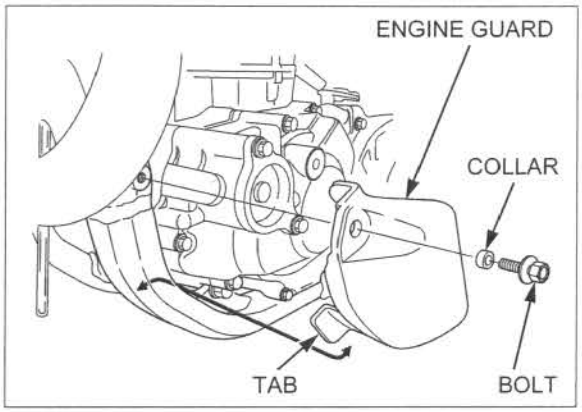

NUMBER PLATE

REMOVAL/INSTALLATION

Remove the number plate tab from the handlebar pad. Remove the bolts and number plate.

Install the number plate by aligning its holes with the tabs on the steering stem.

Installation is in the reverse order of removal.

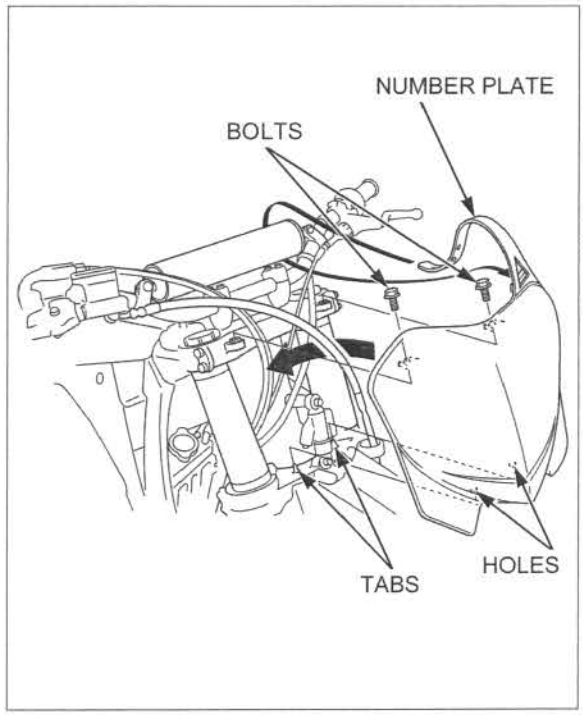

REAR FENDER

REMOVAL/INSTALLATION

Remove the following:

- Seat (page 3-3)
- Side covers (page 3-3)

Remove the mounting bolts and rear fender.

Installation is in the reverse order of removal.

TORQUE:
Rear fender mounting bolt:
13 N·m (1.3 kgf·m, 10 lbf·ft)

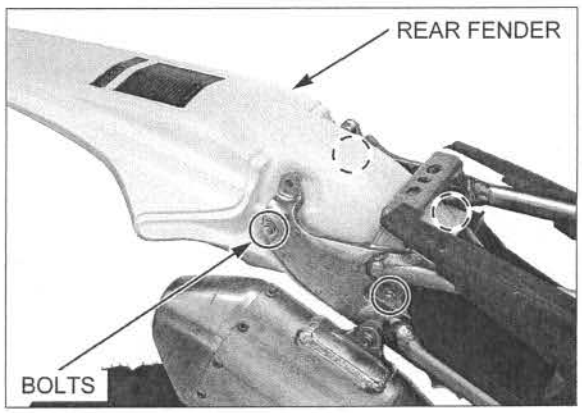

SUB-FRAME

REMOVAL

Remove the following:

- Seat (page 3-3)
- Side covers (page 3-3)
- Muffler (page 3-8)

Disconnect the IAT sensor 2P (Gray) connector.

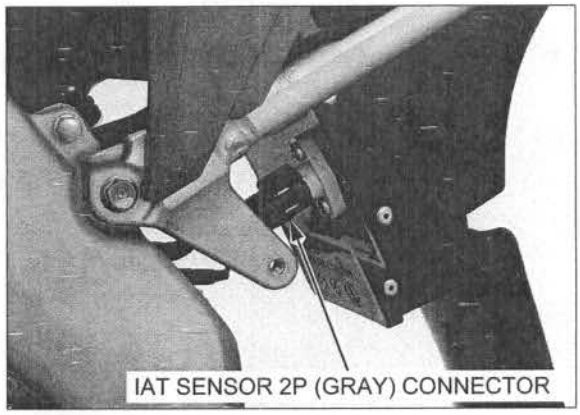

Loosen the air cleaner connecting boot band bolt.

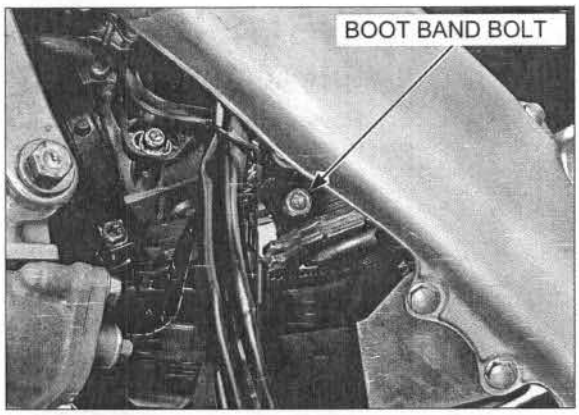

Be careful not to damage the ECM and wires.

Remove the ECM with the rubber cover from the stay of the sub-frame.

Unhook the fuel tank band from the fuel tank band bracket.

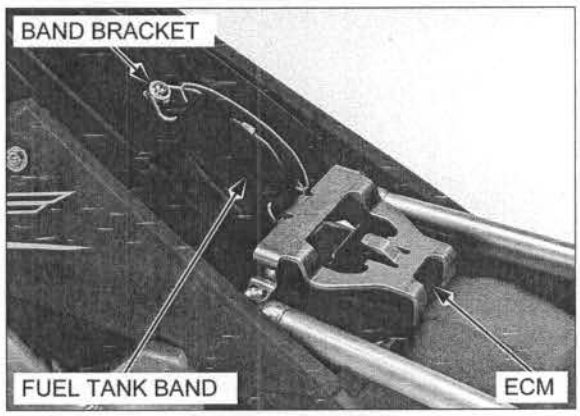

Remove the sub-frame upper and lower mounting bolts.

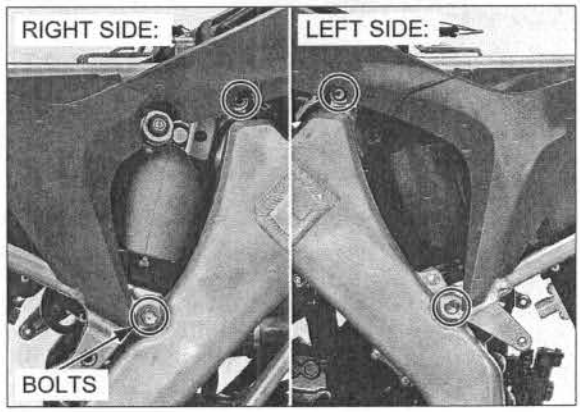

Be careful not to damage the mud guard.

Remove the connecting boot from the throttle body by pulling the sub-frame backward.

Disconnect the crankcase breather hose from the air cleaner housing and then remove the sub-frame.

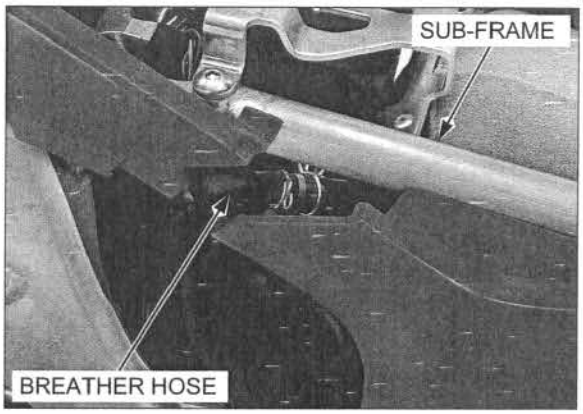

INSTALLATION

Install the sub-frame while aligning each radiator shroud tab with each air cleaner housing cover slot.

Connect the crankcase breather hose.

Install the ECM to the stay of the sub-frame.

Tighten the sub-frame upper mounting bolts first, then tighten the lower mounting bolts to the specified torque.

TORQUE:

Upper:	**33 N·m (3.4 kgf·m, 24 lbf·ft)**
Right lower:	**49 N·m (5.0 kgf·m, 36 lbf·ft)**
Left lower:	**33 N·m (3.4 kgf·m, 24 lbf·ft)**

Hook the fuel tank band to the fuel tank band bracket.

Connect the IAT sensor 2P (GRAY) connector.

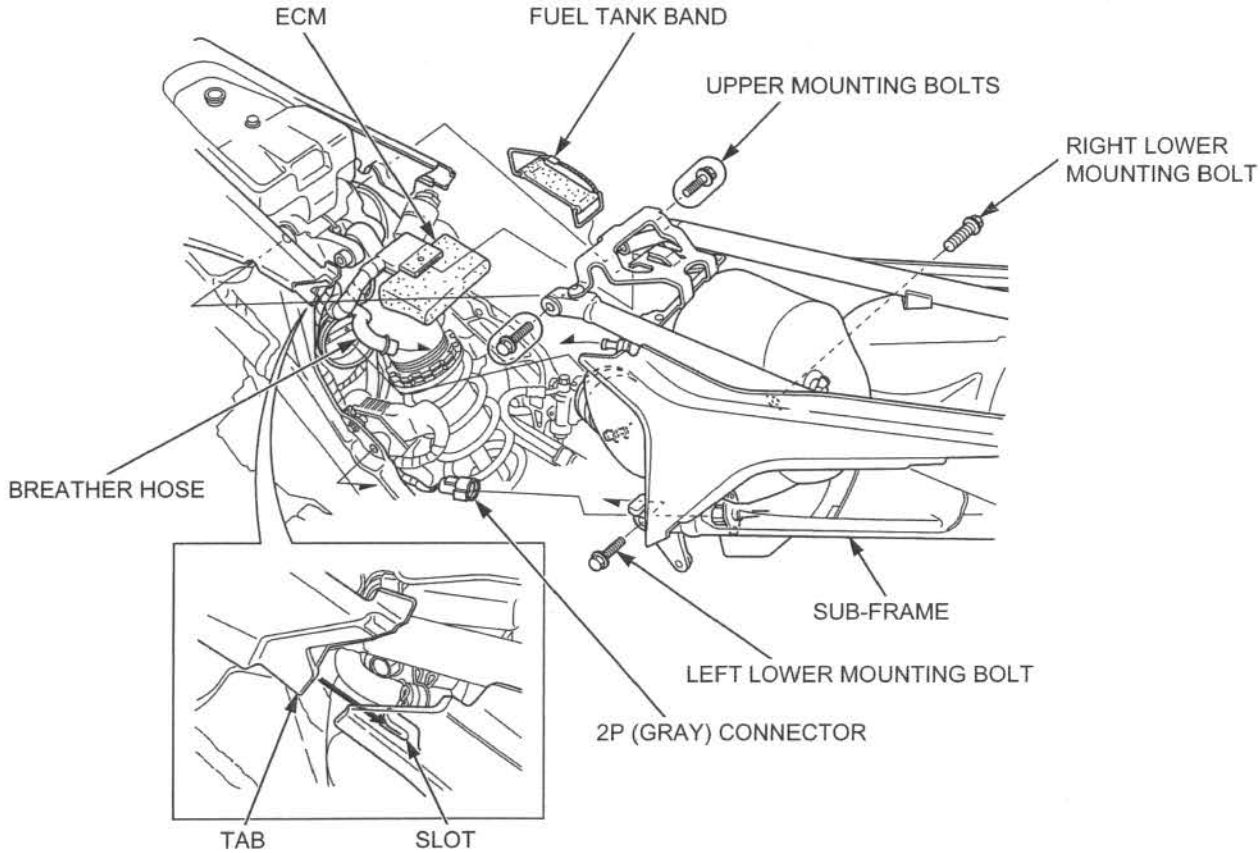

Align the air cleaner connecting boot band hole with the tab of the air cleaner connecting boot.

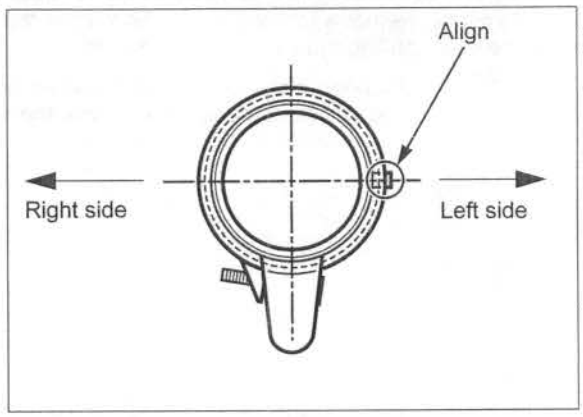

Tighten the air cleaner connecting boot band bolt to the specified width as shown.

Install the following:

- Muffler (page 3-8)
- Side covers (page 3-3)
- Seat (page 3-3)

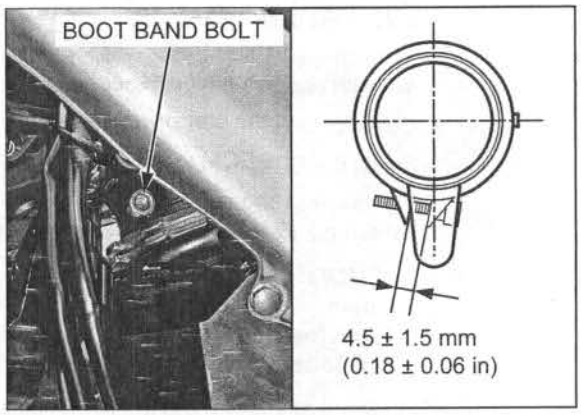

EXHAUST SYSTEM

MUFFLER REMOVAL/INSTALLATION

Remove the right side cover (page 3-3).

Loosen the muffler joint band bolt.

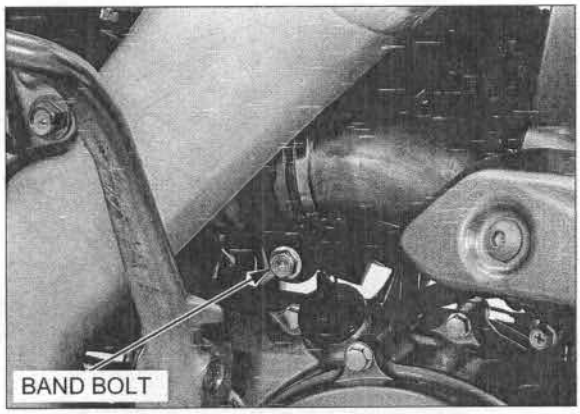

Remove the muffler mounting bolts, washers, muffler, gasket and muffler joint band.

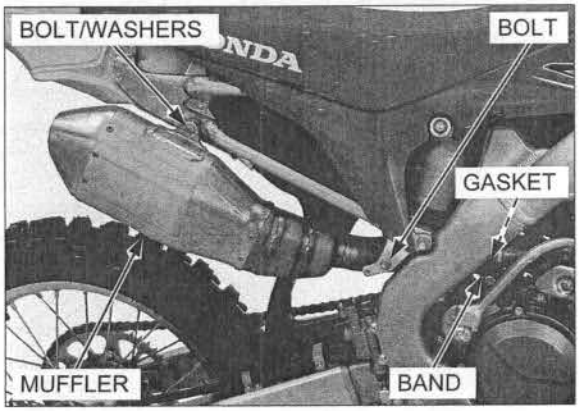

Install the muffler joint band and a new gasket to the exhaust pipe.

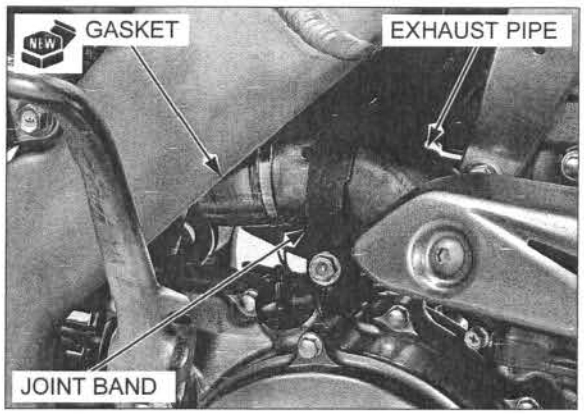

Install the muffler by aligning the tab of the muffler joint band with the cut-out of the muffler.

Install the washers and muffler mounting bolts.
Tighten the muffler mounting bolts to the specified torque.

TORQUE: 26 N·m (2.7 kgf·m, 19 lbf·ft)

Tighten the muffler joint band bolt to the specified torque.

TORQUE: 21 N·m (2.1 kgf·m, 15 lbf·ft)

Install the right side cover (page 3-3).

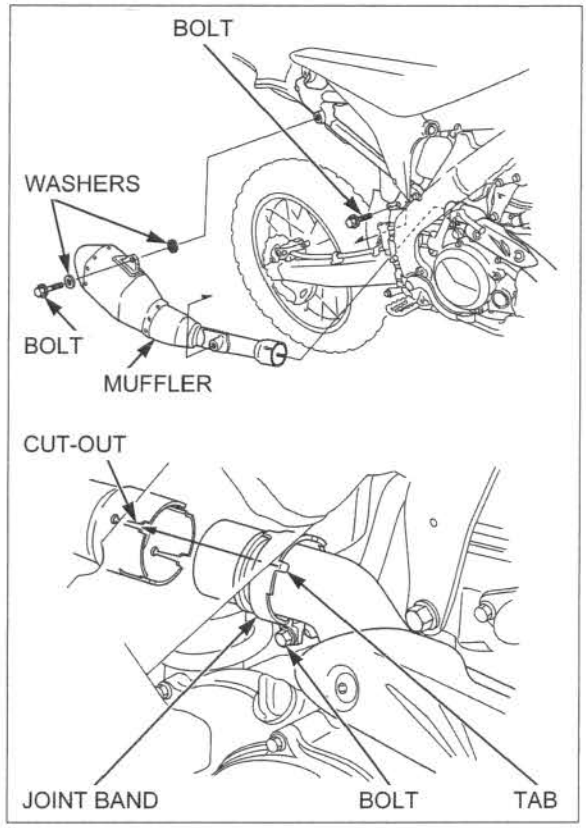

EXHAUST PIPE REMOVAL

Remove the muffler (page 3-8).

Remove the exhaust pipe joint nuts, exhaust pipe and gasket.

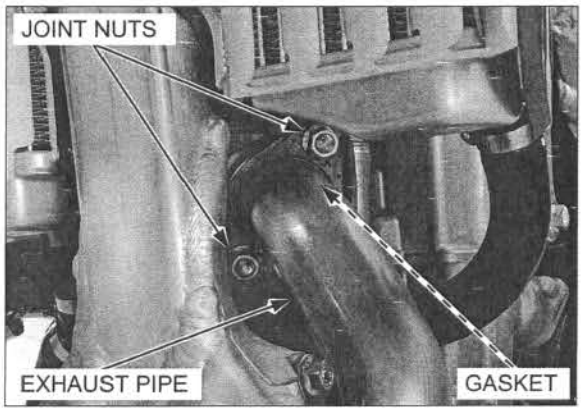

EXHAUST PIPE DISASSEMBLY/ASSEMBLY

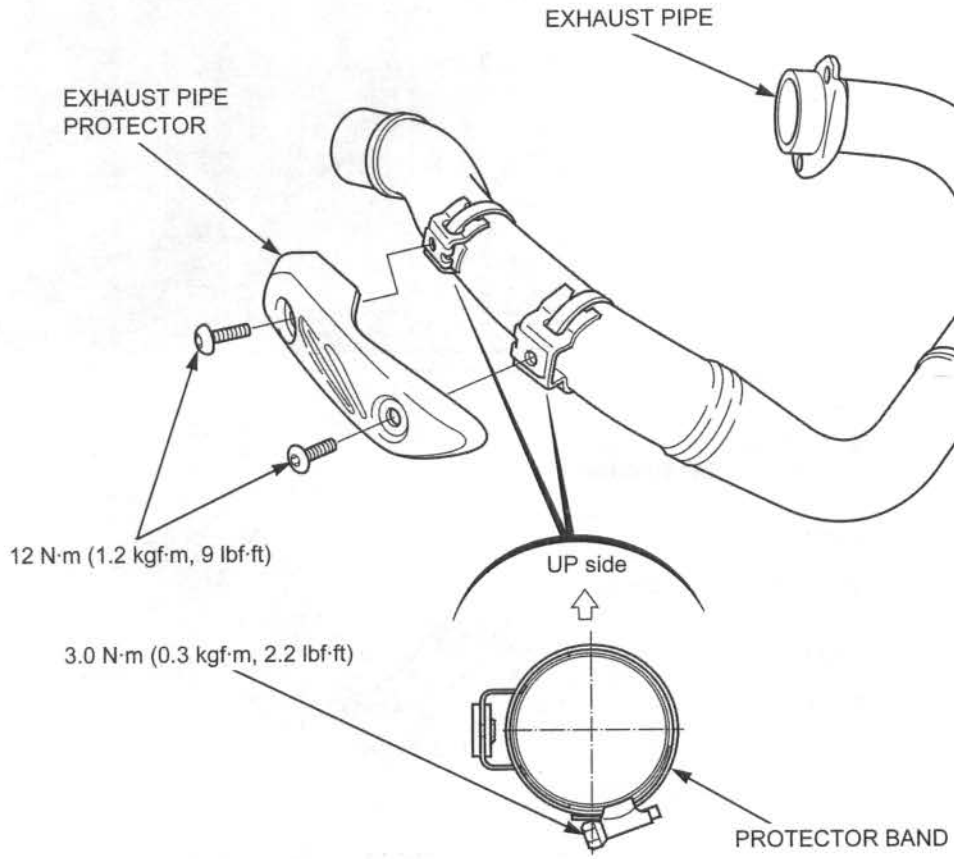

EXHAUST PIPE INSTALLATION

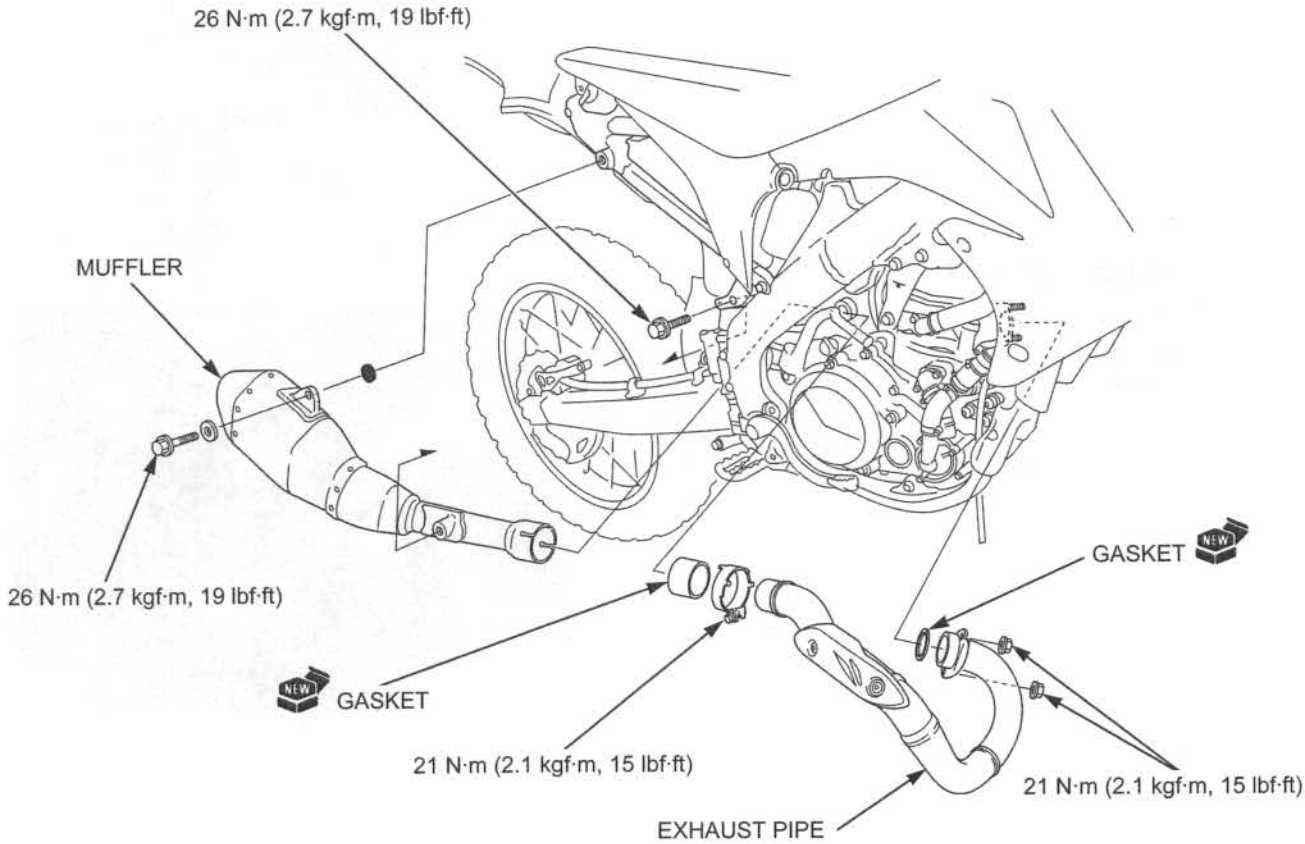

Install a new gasket to the exhaust port of the cylinder head.

- Always replace the exhaust pipe gasket with a new one whenever the exhaust pipe is removed.

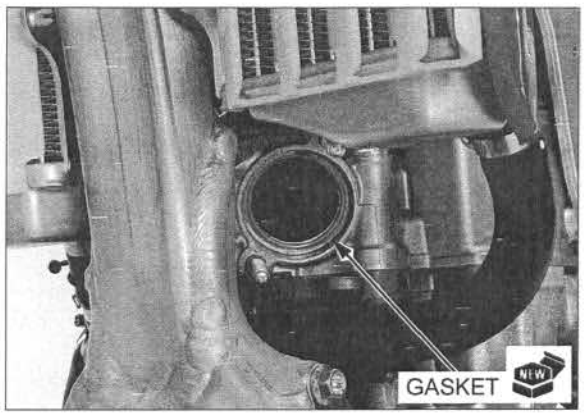

Install the exhaust pipe but do not tighten the exhaust pipe joint nuts yet.

Install the muffler (page 3-8) but do not tighten the muffler mounting bolts yet.

Tighten the exhaust pipe joint nuts to the specified torque.

TORQUE: 21 N·m (2.1 kgf·m, 15 lbf·ft)

Always inspect the exhaust system for leaks after installation.

Tighten the muffler mounting fasteners.

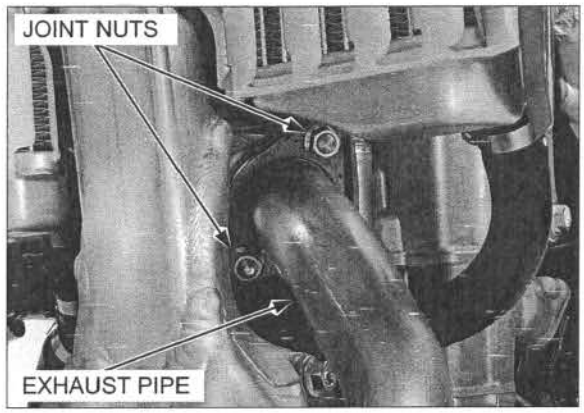

CYLINDER HEAD EXHAUST PIPE STUD BOLT REPLACEMENT

Thread two nuts onto the stud, and tighten them together, then use a wrench on them to turn the stud bolt out.

Install new stud bolts into the cylinder head as shown.

After installing the stud bolts, check that the length from the bolt head to the cylinder head surface is within specification.

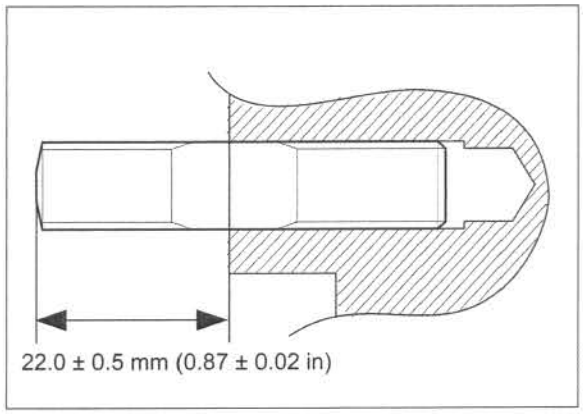

MEMO

SERVICE INFORMATION

GENERAL

- Place the motorcycle on a level surface before starting any work.
- Work in a well ventilated area. Smoking or allowing flames or sparks in the work area or where the gasoline is stored can cause a fire or explosion.
- If the engine must be running to do some work, make sure the area is well ventilated. Never run the engine in an enclosed area.
- The exhaust contains poisonous carbon monoxide gas that may cause loss of consciousness and may lead to death. Run the engine in an open area or with an exhaust evacuation system in an enclosed area.

SPECIFICATIONS

ITEM			SPECIFICATIONS
Throttle grip freeplay			3 – 5 mm (1/8 – 3/16 in)
Spark plug	Standard		SILMAR9A-9S (NGK)
	Option		SILMAR10A-9S (NGK)
Spark plug gap			0.8 – 0.9 mm (0.03 – 0.04 in)
Valve clearance	IN		0.16 ± 0.03 mm (0.006 ± 0.001 in)
	EX		0.28 ± 0.03 mm (0.011 ± 0.001 in)
Engine oil capacity	At draining		0.58 liter (0.61 US qt, 0.51 Imp qt)
	At oil filter change		0.62 liter (0.66 US qt, 0.55 Imp qt)
	At disassembly		0.77 liter (0.81 US qt, 0.68 Imp qt)
Transmission oil capacity	At draining		0.59 liter (0.62 US qt, 0.52 Imp qt)
	At disassembly		0.67 liter (0.71 US qt, 0.59 Imp qt)
Recommended engine oil			Pro Honda GN4 4-stroke oil (U.S.A. and Canada) or equivalent motor oil API service classification: SG or Higher JASO T 903 standard: MA Viscosity: SAE 10W-30
Recommended transmission oil			Pro Honda GN4 4-stroke oil (U.S.A. and Canada) or equivalent motor oil API service classification: SG or Higher JASO T 903 standard: MA Viscosity: SAE 10W-30
Idle speed	'09		1,750 ± 100 rpm
	After '09		1,800 ± 100 rpm
Drive chain	Size/link	DID	DID 520DMA4/116
		RK	RK 520TXZ-116RJ
	Slack		30 – 40 mm (1.2 – 1.6 in)
Drive chain length at 17 pins (16 pitches)			259 mm (10.2 in)
Drive chain slider thickness			5 mm (0.2 in)
Drive chain roller O.D.	Upper/lower		35 mm (1.4 in)
Clutch lever freeplay			10 – 20 mm (3/8 – 13/16 in)
Tire size	Front		80/100-21 51M
	Rear		120/80-19 63M
Cold tire pressure	Front		100 kPa (1.0 kgf/cm^2, 15 psi)
	Rear		100 kPa (1.0 kgf/cm^2, 15 psi)
Brake pedal height			79.6 mm (3.13 in)

TORQUE VALUES

Throttle cable adjuster lock nut		
(grip side)	4.0 N·m (0.4 kgf·m, 3.0 lbf·ft)	
(throttle body side)	4.0 N·m (0.4 kgf·m, 3.0 lbf·ft)	
Throttle cable bolt	4.0 N·m (0.4 kgf·m, 3.0 lbf·ft)	
Engine oil drain bolt	16 N·m (1.6 kgf·m, 12 lbf·ft)	Apply engine oil to the threads and seating surface.
Transmission oil drain bolt	16 N·m (1.6 kgf·m, 12 lbf·ft)	Apply engine oil to the threads and seating surface.
Transmission oil check bolt	12 N·m (1.2 kgf·m, 9 lbf·ft)	
Crankshaft hole cap	15 N·m (1.5 kgf·m, 11 lbf·ft)	Apply grease to the threads.
Spark plug	22 N·m (2.2 kgf·m, 16 lbf·ft)	
Brake lever adjuster lock nut	5.9 N·m (0.6 kgf·m, 4.4 lbf·ft)	
Rear master cylinder push rod lock nut	5.9 N·m (0.6 kgf·m, 4.4 lbf·ft)	
Rear axle nut	128 N·m (13.1 kgf·m, 94 lbf·ft)	U-nut
Drive chain upper roller bolt	12 N·m (1.2 kgf·m, 9 lbf·ft)	SH bolt
Drive chain lower roller nut	12 N·m (1.2 kgf·m, 9 lbf·ft)	U-nut
Drive sprocket bolt	31 N·m (3.2 kgf·m, 23 lbf·ft)	
Driven sprocket nut	32 N·m (3.3 kgf·m, 24 lbf·ft)	U-nut
Front master cylinder reservoir cover screw	1.0 N·m (0.1 kgf·m, 0.7 lbf·ft)	
Rear master cylinder reservoir cover bolt	1.0 N·m (0.1 kgf·m, 0.7 lbf·ft)	
Exhaust pipe joint nut	21 N·m (2.1 kgf·m, 15 lbf·ft)	
Muffler joint band bolt	21 N·m (2.1 kgf·m, 15 lbf·ft)	
Front spoke	3.7 N·m (0.4 kgf·m, 2.7 lbf·ft)	
Rear spoke	3.7 N·m (0.4 kgf·m, 2.7 lbf·ft)	
Rim lock	12 N·m (1.2 kgf·m, 9 lbf·ft)	
Plug bolt	1.2 N·m (0.1 kgf·m, 0.9 lbf·ft)	
Drive chain adjuster lock nut	27 N·m (2.8 kgf·m, 20 lbf·ft)	

TOOLS

Spoke wrench, 6.1 mm 07JMA-MR60100	Spoke wrench, 6.6 mm 070MA-KZ30100
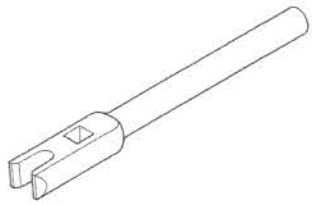	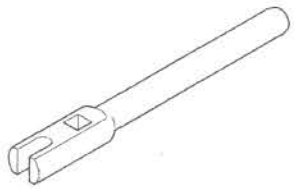

MAINTENANCE SCHEDULE

Perform the Pre-ride inspection in the Owner's Manual at each scheduled maintenance period.

I: Inspect and Clean, Adjust, Lubricate or Replace if necessary. C: Clean. R: Replace. A: Adjust. L: Lubricate.

FREQUENCY / ITEMS	NOTE	Each race or about 2.5 hours	Every 3 races or about 7.5 hours	Every 6 races or about 15.0 hours	Every 9 races or about 22.5 hours	Every 12 races or about 30.0 hours	Refer to page
FUEL LINE	(NOTE 6)	I				R	4-6 6-34
THROTTLE OPERATION		I					4-7
AIR CLEANER	(NOTE 1)	C					4-8
CRANKCASE BREATHER		I					4-10
SPARK PLUG		I					4-10
VALVE CLEARANCE	(NOTE 4)			I			4-12
ENGINE OIL	(NOTE 3)			R			4-15
ENGINE OIL FILTER	(NOTE 3)			R			4-15
ENGINE IDLE SPEED		I					4-17
PISTON AND PISTON RINGS				R			10-7
PISTON PIN						R	10-7
TRANSMISSION OIL	(NOTE 5)			R			4-18
RADIATOR COOLANT	(NOTE 2)	I					4-11
COOLING SYSTEM		I					4-19
DRIVE CHAIN		I, L	R				4-20
DRIVE CHAIN SLIDER		I					4-22
DRIVE CHAIN ROLLER		I					4-23
DRIVE SPROCKET		I					4-23
DRIVEN SPROCKET		I					4-23
BRAKE FLUID	(NOTE 2)	I					4-24
BRAKE PADS WEAR		I					4-25
BRAKE SYSTEM		I					4-25
CLUTCH SYSTEM	(NOTE 5)	I					4-26
CONTROL CABLES		I, L					4-28
EXHAUST PIPE/MUFFLER		I					4-28
SUSPENSION		I					4-31
SWINGARM/SHOCK LINKAGE			L				4-32
FORK OIL EXCEPT DAMPER	(NOTE 3)		R				14-31
FORK OIL DAMPER					R		14-24
NUTS, BOLTS, FASTENERS		I					4-33
WHEELS/TIRES		I					4-33
STEERING HEAD BEARINGS					I		4-34

This maintenance schedule is based upon average riding conditions. Machine subjected to severe use require more frequent servicing.

NOTES:
1. Clean after every moto for dusty riding condition.
2. Replace every 2 years. Replacement requires mechanical skill.
3. Replace after the first break-in ride.
4. Inspect after the first break-in ride.
5. Replace the transmission oil, if the clutch discs and plates are replaced.
6. Replace every year.

ADDITIONAL ITEMS REQUIRING FREQUENT REPLACEMENT

ENGINE

Item	Cause	Remark
Cylinder head gasket	Compression leak	Replace whenever disassembled.
Clutch disc/plate	Wear or discoloration	
Cylinder base gasket	Leakage	Replace whenever disassembled.
Right crankcase cover gasket	Damage	Replace whenever disassembled.

FRAME

Item	Cause	Remark
Front/rear brake pads	Wear	Minimum thickness: 1.0 mm (0.04 in)
Sub-frame mounting bolts	Fatigue or damage	
Chain guide	Wear or damage	
Side cover	Damage	
Number plate	Damage	
Front/rear fender	Damage	
Clutch lever/holder	Freeplay or damage	
Brake lever	Freeplay or damage	
Handlebar	Bends or cracks	
Throttle housing	Damage	
Handlebar/throttle grip	Damage	
Gearshift pedal	Damage	
Brake pedal	Damage	
Drive chain adjusting bolt/adjuster lock nut	Damage	
Air cleaner	Damage	

NOTE:
- These parts and their possible replacement schedule are based upon average riding conditions.
- Machine subjected to severe use require more frequent servicing.

FUEL LINE

FUEL TANK HANGING

Remove the following:

- Seat (page 3-3)
- Radiator shrouds (page 3-4)

Pinch the fuel tank breather hose with the hose clamp. Remove the fuel tank breather hose from the steering stem.

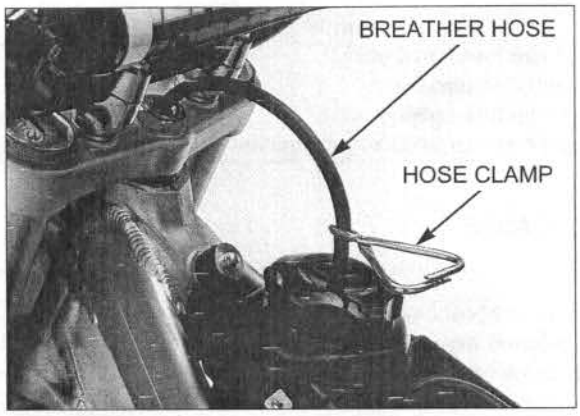

Remove the bolt, collar and fuel tank band.

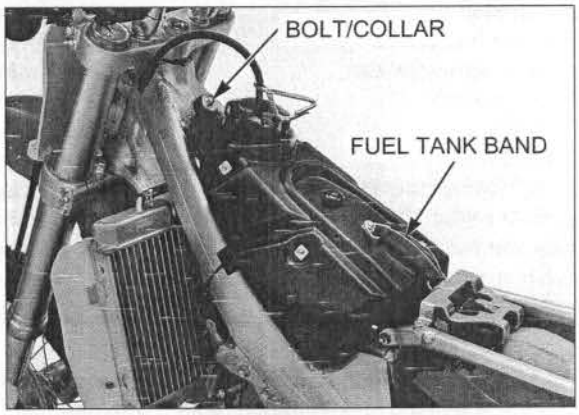

Remove the fuel hose from the hose clamp.

Check the fuel tank stopper cable for proper installation and deterioration, kinks or other damage.

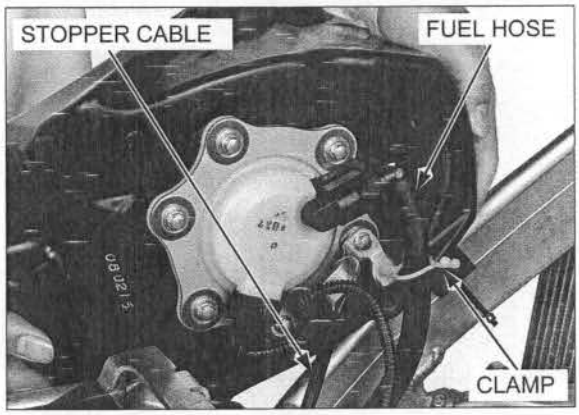

Lift the fuel tank out of the frame and hang it to the left side of the frame.

Route the fuel hose properly (page 1-19).

Installation is in the reverse order of removal.

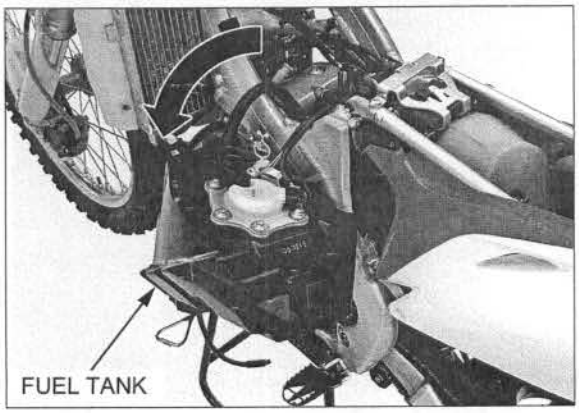

INSPECTION

- Fuel line should be replaced at least every 12 races or about 30 hours of operation to ensure consistent performance.
- For fuel line replacement (page 6-34).

Hang the fuel tank to the left side of the frame (page 4-6).

Check the fuel pump side quick connect fitting cover and rubber cover for proper installation.

Remove the fuel pump side quick connect fitting cover.

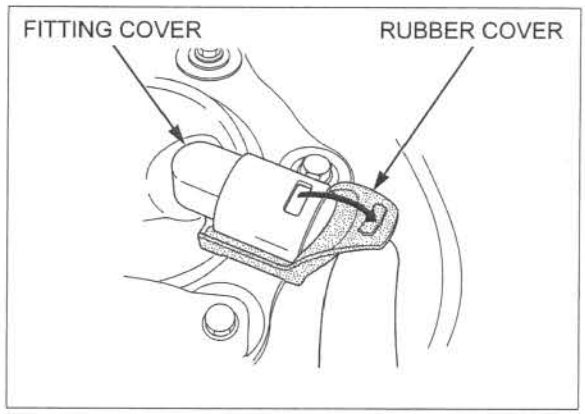

Check the quick connect fitting for looseness.

Check the fuel line for deterioration, damage or leakage.

Check the fuel connect fittings for dirt, and clean if necessary.

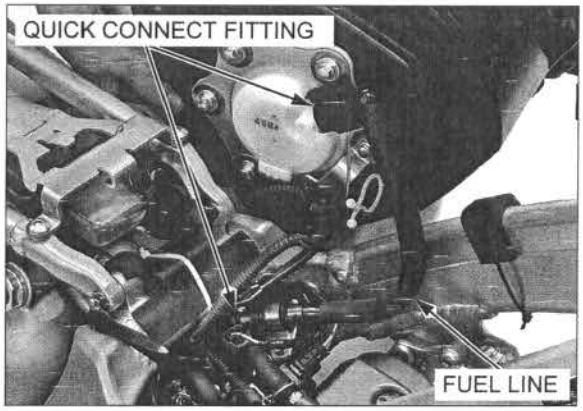

Check the cushion rubbers for proper installation as shown in the illustration.

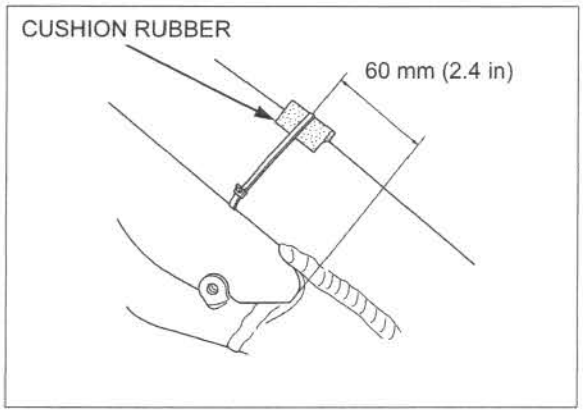

THROTTLE OPERATION

Check for smooth operation of the throttle and that it returns automatically to the fully closed position from any open position and from any steering position.
Check the throttle cables and replace them if they are deteriorated, kinked or damaged.

Lubricate the throttle cables if throttle operation is not smooth.

Measure the freeplay at the throttle grip flange.

FREEPLAY:3 – 5 mm (1/8 – 3/16 in)

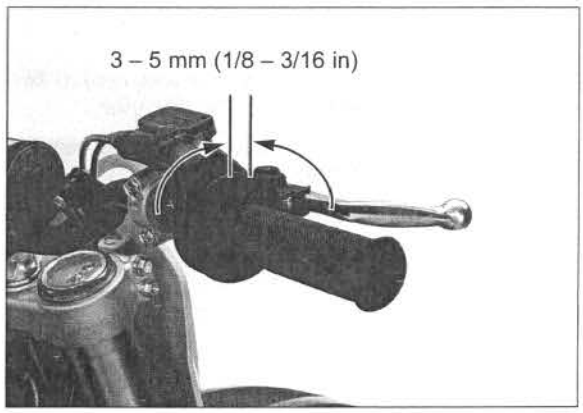

Throttle grip freeplay can be adjusted at either end of the throttle cable.

Minor adjustment is made with the upper adjuster.
Remove the dust cover from the throttle housing.
Adjust the freeplay by loosening the adjuster lock nut, and turning the adjuster.

After adjustment, tighten the adjuster lock nut to the specified torque while holding the adjuster.

TORQUE: 4.0 N·m (0.4 kgf·m, 3.0 lbf·ft)

Reinstall the dust cover to the throttle housing.

Recheck the throttle operation.

If the adjuster cannot be reached the correct freeplay, turn the adjuster all the way in and then turn it out one turn.
Make the major adjustment with the throttle body side of the adjuster.

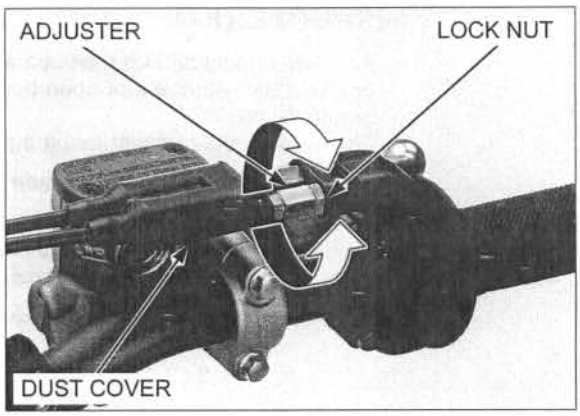

Major adjustment is made with the lower adjuster.

Hang the fuel tank to the left side of the frame (page 4-6).

Adjust the freeplay by loosening the adjuster lock nut, and turning the adjuster.

After adjustment, tighten the adjuster lock nut to the specified torque while holding the adjuster.

TORQUE: 4.0 N·m (0.4 kgf·m, 3.0 lbf·ft)

Recheck the throttle operation.

Install the fuel tank (page 4-6).

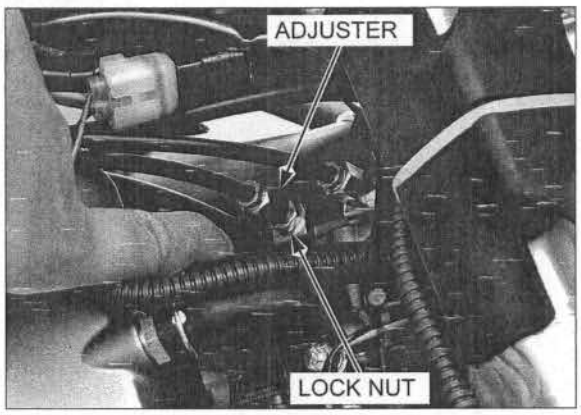

AIR CLEANER

Remove the seat (page 3-3).

Remove the retaining bolt and air cleaner assembly.

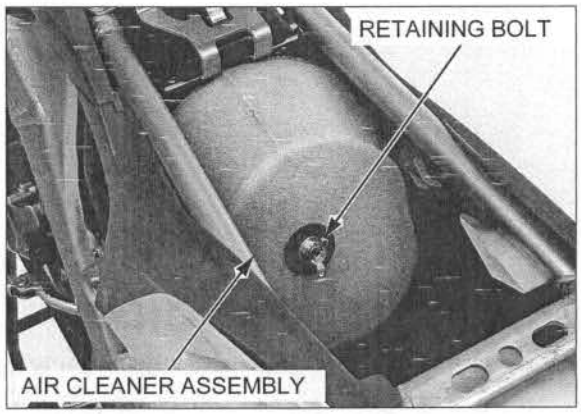

Unhook the element hole (After '09: holes) from the holder tab (After '09: tabs).

Remove the air cleaner element from the element holder.

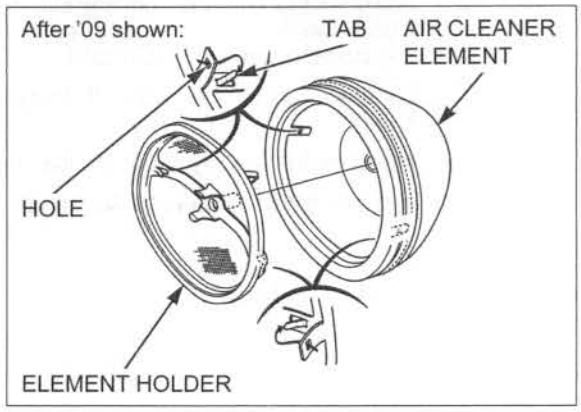

Thoroughly wash the air cleaner element in clean nonflammable or high flash-point cleaning solvent.
Then wash the air cleaner element again in a solution of hot water and dishwashing liquid soap.

After cleaning, be sure there is no dirt or dust trapped between the inner and outer layer of the air cleaner element.
Wash again if necessary.

Allow the air cleaner element to dry thoroughly.

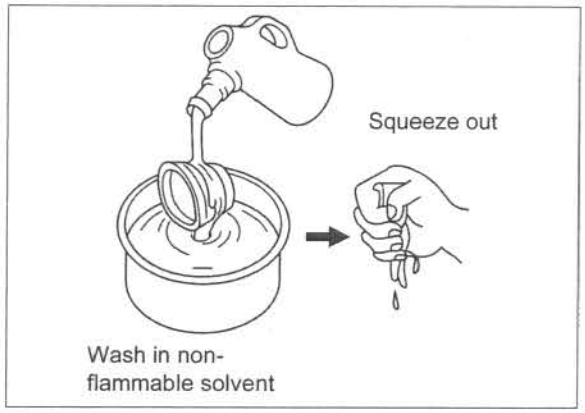

Apply 50 cm^3 of Pro Honda Foam Filter Oil or equivalent oil from the inside of the element.
Place the element into a plastic bag and spread the oil evenly by hand.

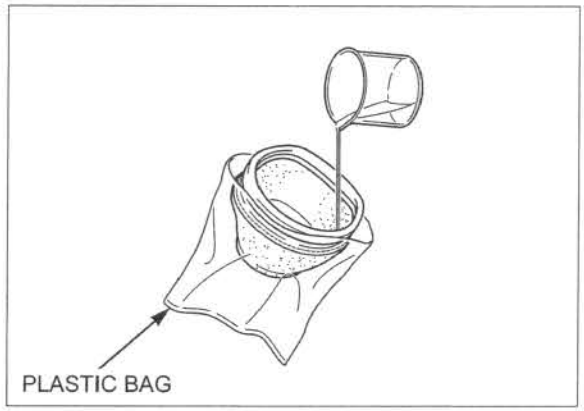

Apply a thin coat of Pro Honda White Lithium Grease or an equivalent to the sealing surface.

'09: Assemble the air cleaner element and element holder.

After '09: Assemble the air cleaner element and element holder while aligning with their flat surfaces.

Hook the element hole (After '09: holes) onto the holder tab (After '09: tabs).

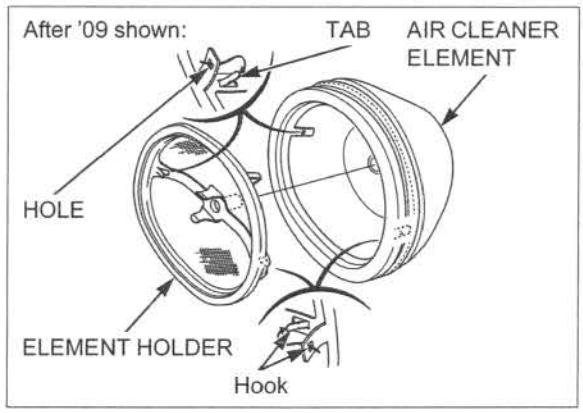

Apply 3 – 5 g (0.1 – 0.2 oz) of grease to the air cleaner assembly contacting area of the air cleaner housing.

'09: Install the air cleaner assembly into the air cleaner housing with the tab of the element holder facing up.

After '09: Install the air cleaner assembly into the air cleaner housing with its flat surface toward the right side.

Install and tighten the retaining bolt.
Install the seat (page 3-3).

NOTE:
If the air cleaner assembly is not installed correctly, dirt and dust may enter the engine resulting in wear of the piston ring and cylinder.

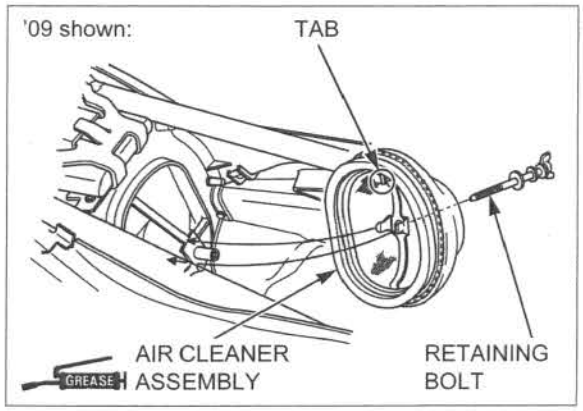

CRANKCASE BREATHER

Remove the crankcase breather hose drain plug, then drain any fluids or dirt from the crankcase breather hose into a proper container.

Reinstall the drain plug.

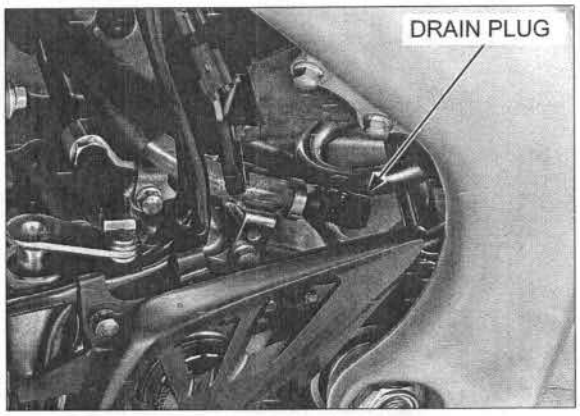

SPARK PLUG

REMOVAL

Hang the fuel tank to the left side of the frame (page 4-6).

Disconnect the spark plug cap.

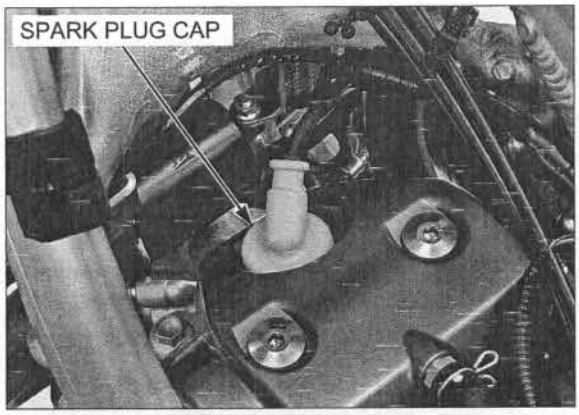

Clean around the spark plug base with compressed air before removing, and be sure that no debris is allowed to enter the combustion chamber.

Remove the spark plug, and inspect it for damage.

Inspect or replace as described in the maintenance schedule (page 4-4).

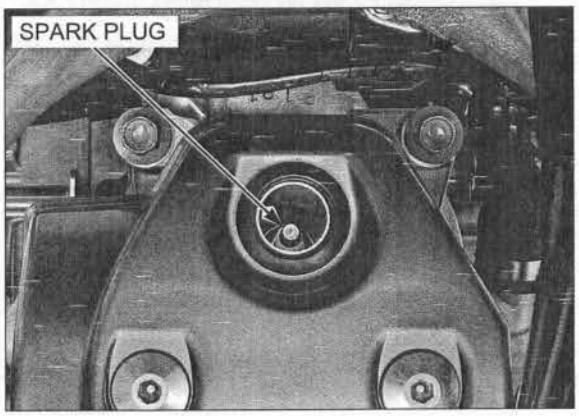

INSPECTION

Check the following and replace if necessary.

- Insulator for damage
- Electrodes for wear
- Burning condition, coloration

This motorcycle's spark plug is equipped with an iridium center electrode. Replace the spark plug if the electrode is contaminated.

If the electrode is contaminated with accumulated objects or dirt, replace the spark plug.

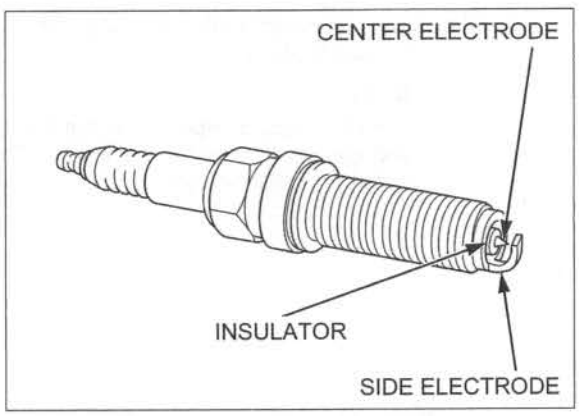

Replace the spark plug if the center electrode is rounded as shown in the illustration.

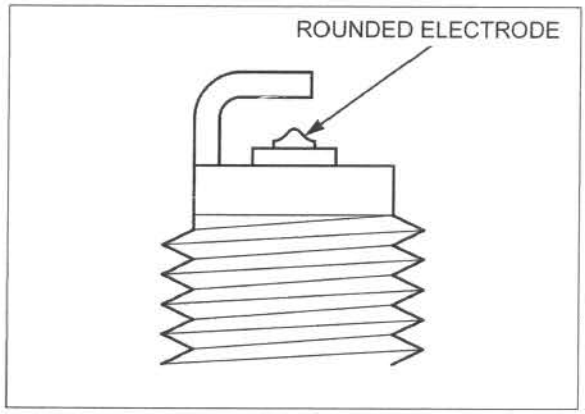

Always use the specified spark plug on this motorcycle.

RECOMMENDED SPARK PLUG (OR EQUIVALENT)
Standard: SILMAR9A-9S (NGK)
Optional: SILMAR10A-9S (NGK)

To prevent damaging the iridium center electrode, use a wire type feeler gauge to check the spark plug gap.

Check the gap between the center and side electrodes with a wire type feeler gauge.

SPARK PLUG GAP: 0.8 - 0.9 mm (0.03 - 0.04 in)

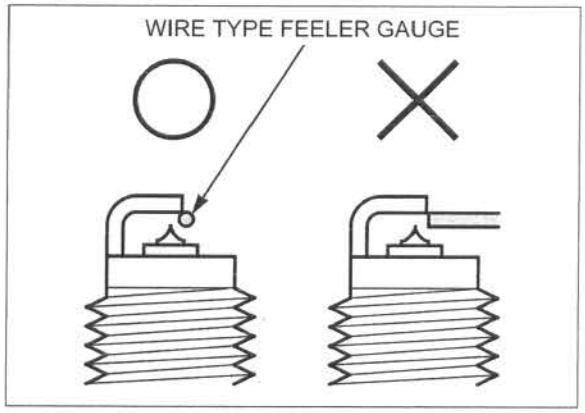

Do not adjust the spark plug gap. If the gap is out of specification, replace with a new one.

Make sure that the 1.0 mm (0.04 in) diameter plug gauge does not insert between the gap.
If the gauge can be inserted into the gap, replace the plug with a new one.

Install and hand tighten the spark plug to the cylinder head, then tighten the spark plug to the specified torque.

TORQUE: 22 N·m (2.2 kgf·m, 16 lbf·ft)

Connect the spark plug cap securely.

Install the fuel tank (page 4-6).

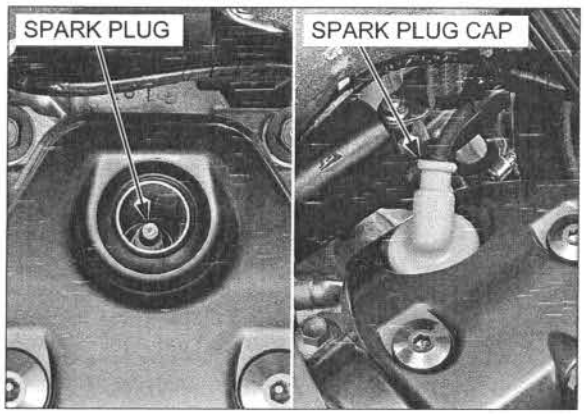

RADIATOR COOLANT

Remove the radiator cap (page 7-6).

Check the coolant level with the engine cold, it should be up to the filler neck.

Add the coolant as required (page 7-7).

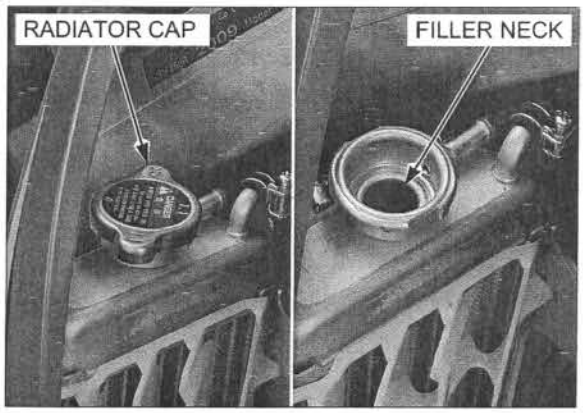

VALVE CLEARANCE

INSPECTION

Inspect and adjust the valve clearance while the engine is cold (below 35°C/ 95°F)

Remove the cylinder head cover (page 9-7).

Remove the crankshaft hole cap and O-ring.

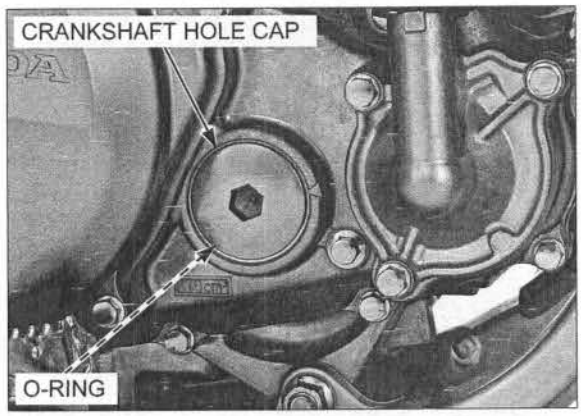

Turn the crankshaft clockwise to align the punch mark on the primary drive gear with the "△" mark on the right crankcase cover.

Check the index line on the cam sprocket aligns with the cut-out of the camshaft holder.

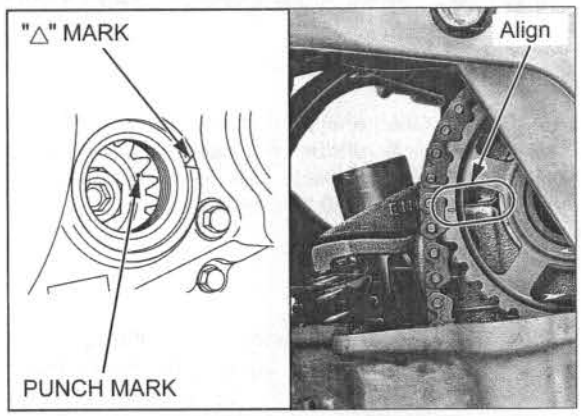

Make sure the piston is at TDC (Top Dead Center) on the compression stroke.
This position can be obtained by confirming that there is slack in the rocker arms.

If there is no slack, it is because the piston is moving through the exhaust stroke to TDC.
Rotate the crankshaft clockwise one full turn, and match up the punch mark on the primary drive gear with the "△" mark on the right crankcase cover again.

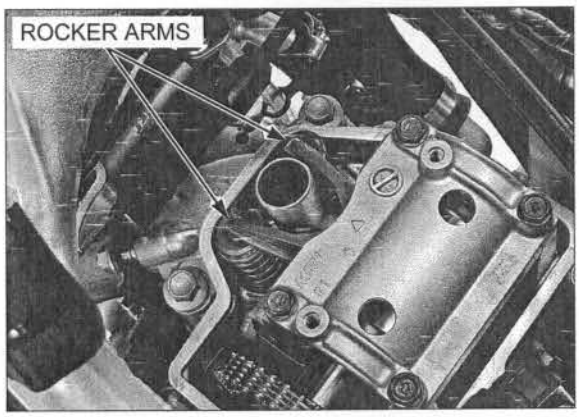

INTAKE SIDE:

Insert the feeler gauge between the valve lifter and cam lobe.

Record the clearance for each valve for reference in shim selection if adjustment is required.

Check the valve clearance for the intake valves using a feeler gauge.

VALVE CLEARANCE:
0.16 ± 0.03 mm (0.006 ± 0.001 in)

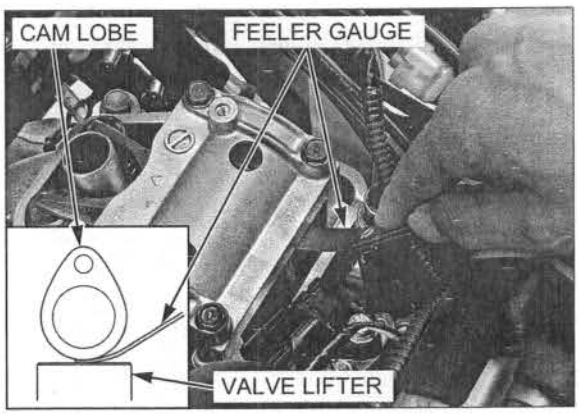

EXHAUST SIDE:

Insert the feeler gauge between the rocker arm and shim.

Record the clearance for each valve for reference in shim selection if adjustment is required.

Check the valve clearance for the exhaust valves using a feeler gauge.

VALVE CLEARANCE:
0.28 ± 0.03 mm (0.011 ± 0.001 in)

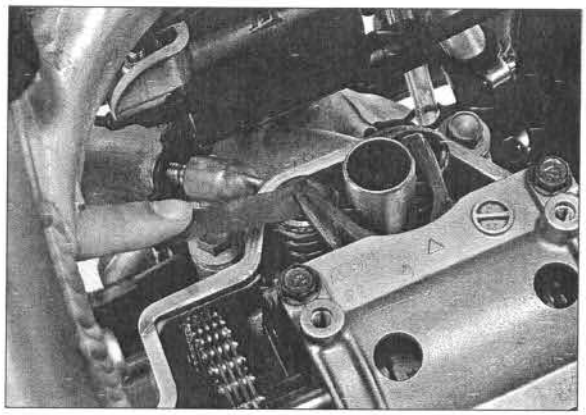

VALVE CLEARANCE ADJUSTMENT

Remove the camshaft (page 9-10).

Remove the valve lifters.

- The shims may stick to the inside of the valve lifter. Do not allow the shims to drop into the crankcase.

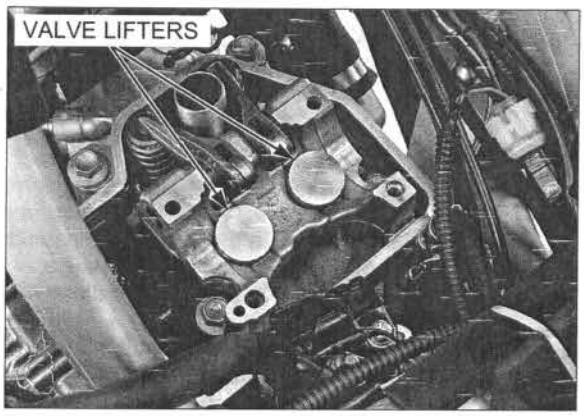

Remove the shims.

- Mark all valve shims to ensure correct reassembly in their original locations.
- The shims can be easily removed with tweezers or a magnet.

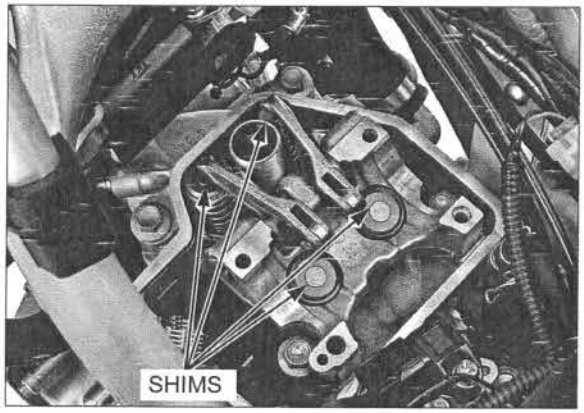

Clean the valve shim contact area in the valve lifter with compressed air.

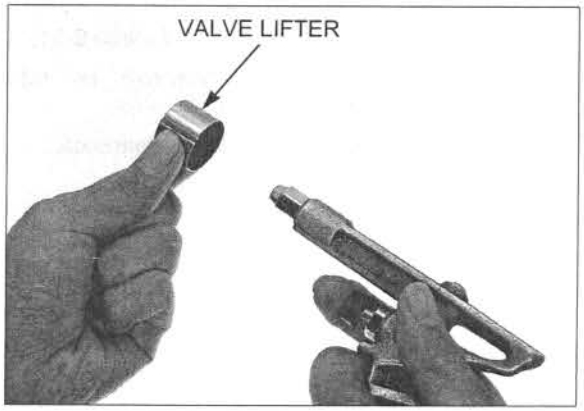

Measure the shim thickness and record it.

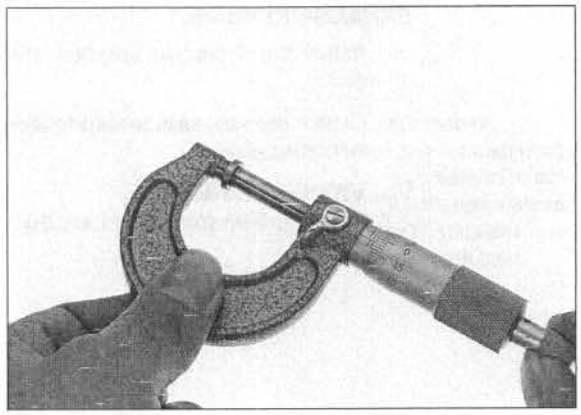

Seventy-three different thickness shims are available from 1.200 mm to 3.000 mm in increments of 0.025 mm.

Calculate the new shim thickness using the equation below.

A = (B – C) + D

A: New shim thickness
B: Recorded valve clearance
C: Specified valve clearance
D: Old shim thickness

- Make sure of the correct shim thickness by measuring the shim using a micrometer.
- Reface the intake valve seat if carbon deposits result in a calculated dimension of over 2.450 mm.
- Reface the exhaust valve seat if carbon deposits result in a calculated dimension of over 3.000 mm.

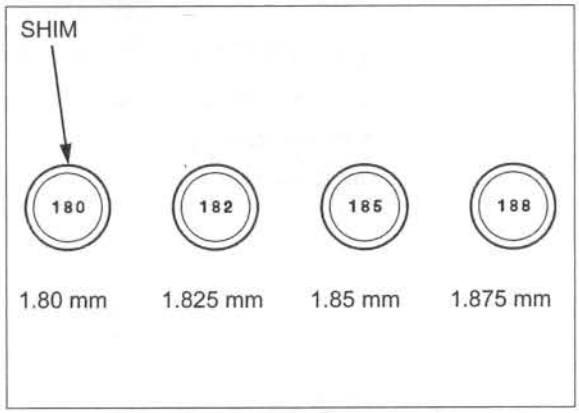

Install the shims in their original locations.

Install the newly selected shims on the valve spring retainers.

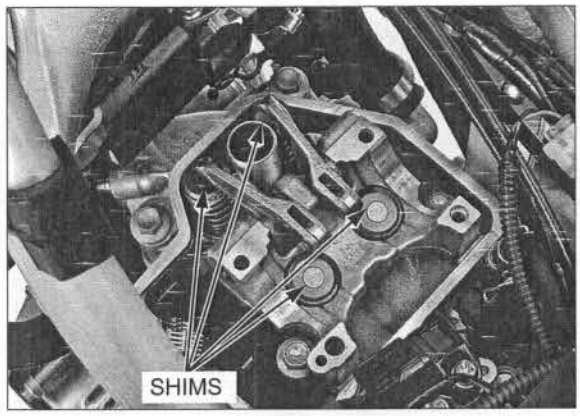

Apply molybdenum oil solution to the valve lifter outer surface.

Install the valve lifters in their original locations.

Install the valve lifters.

Install the camshaft (page 9-31).

Rotate the camshaft by rotating the crankshaft clockwise several times.

Recheck the valve clearance.

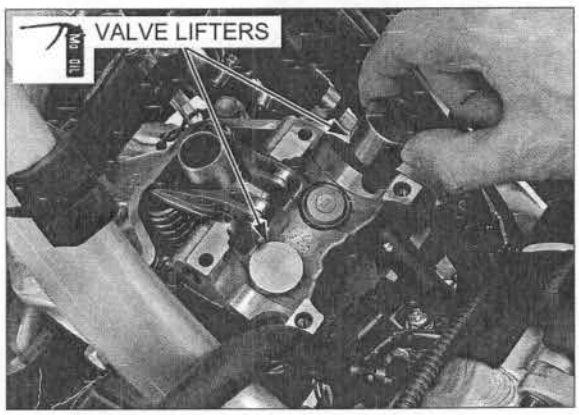

Apply engine oil to a new O-ring, and install it to the crankshaft hole cap.
Apply grease to the crankshaft hole cap threads.

Install and tighten the crankshaft hole cap to the specified torque.

TORQUE: 15 N·m (1.5 kgf·m, 11 lbf·ft)

Install the cylinder head cover (page 9-8).

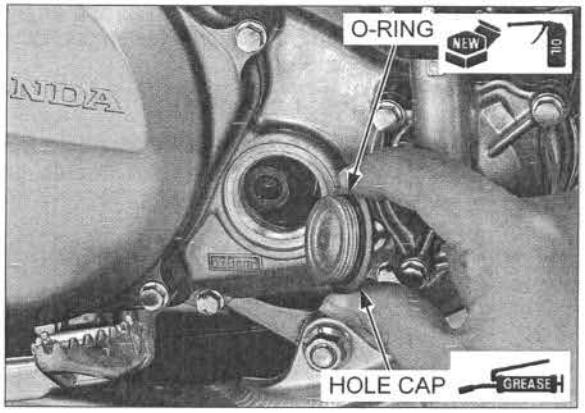

ENGINE OIL/OIL FILTER

OIL LEVEL INSPECTION

Start the engine and let it idle for 3 minutes.
Stop the engine and wait 3 minutes.
Support the motorcycle upright on a level surface.

Remove the oil filler cap/dipstick and wipe the oil with a clean cloth.
Insert the oil filler cap/dipstick without screwing it in, remove it and check the oil level.

If the oil level is below or near the lower level line on the oil filler cap/dipstick, and add the recommended engine oil to the upper level line through the oil filler hole.

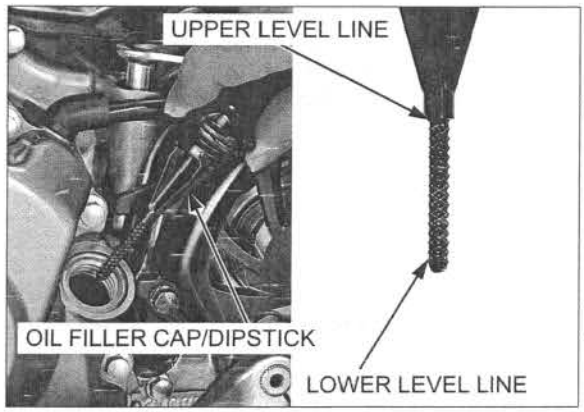

RECOMMENDED ENGINE OIL:
Pro Honda GN4 4-stroke oil (U.S.A. and Canada) or equivalent motor oil
API service classification: SG or Higher
JASO T 903 standard: MA
Viscosity: SAE 10W-30

Check the O-ring is in good condition, replace it if necessary.

Reinstall the oil filler cap/dipstick.

NOTE:
Other viscosities of oil may be used depending upon the average temperature in your riding area. Use the chart as a guide.

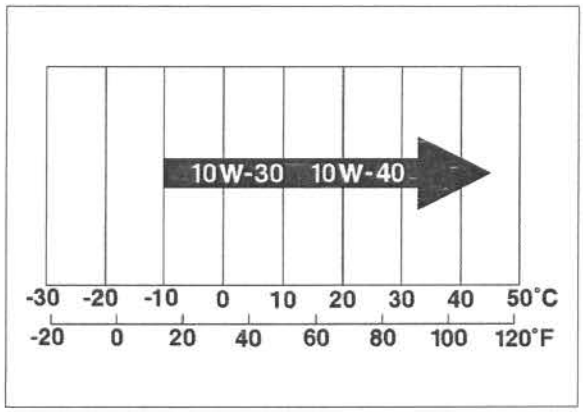

ENGINE OIL & FILTER CHANGE

Change the engine oil with the engine warm and the motorcycle on level ground to assure complete draining.

- Engine oil should be changed at least every 6 races or 15 hours of operation to ensure consistent performance.

Support the motorcycle upright on a level surface.

Remove the oil filler cap/dipstick from the left crankcase cover.

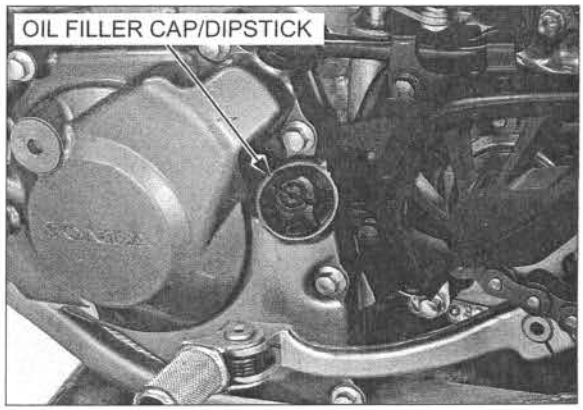

Place an oil pan under the engine to catch the engine oil, then remove the engine oil drain bolt and sealing washer.

Drain the engine oil.

- Operate the kickstarter pedal five times or more while opening the throttle fully, so the engine oil completely drains.

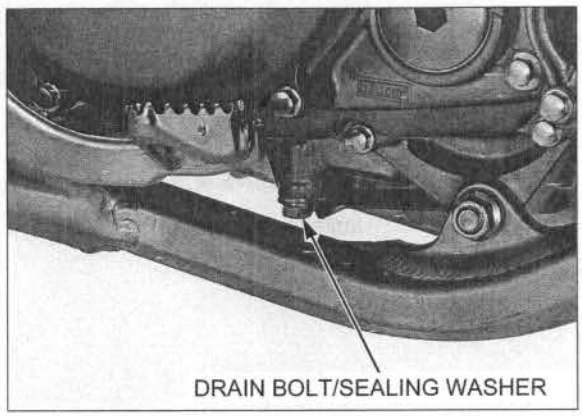

Oil filter change: Remove the engine guard (page 3-5).

Remove the following:

- Bolts
- Oil filter cover
- O-ring
- Oil filter
- Spring

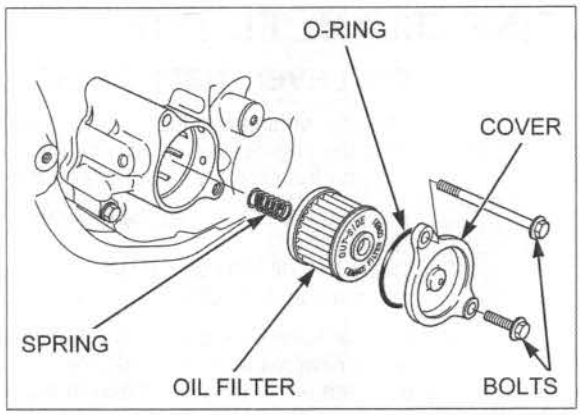

Apply grease to the oil filter spring of the oil filter contact area.

Install the oil filter spring into a new oil filter.

Install the oil filter with the "OUT-SIDE" mark facing out.

NOTE:
Installing the oil filter backwards will result in severe engine damage.

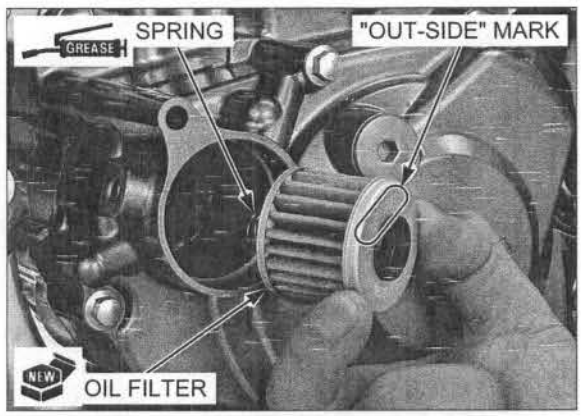

Apply engine oil to a new O-ring, and install it to the oil filter cover.

Install the oil filter cover and bolts.
Tighten the bolts securely.

Install the engine guard (page 3-5).

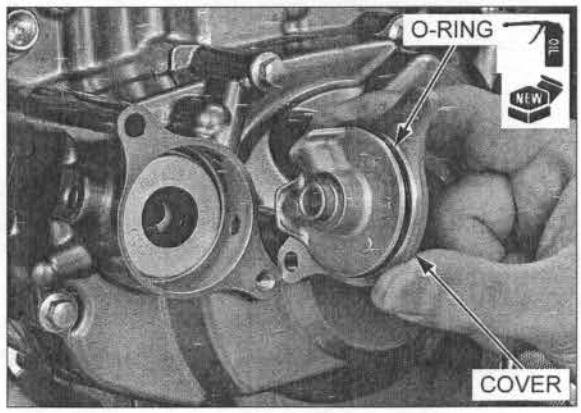

Apply engine oil to the engine oil drain bolt threads and seating surface.

Install a new sealing washer to the engine oil drain bolt, and install them to the left crankcase cover.

Tighten the engine oil drain bolt to the specified torque.

TORQUE: 16 N·m (1.6 kgf·m, 12 lbf·ft)

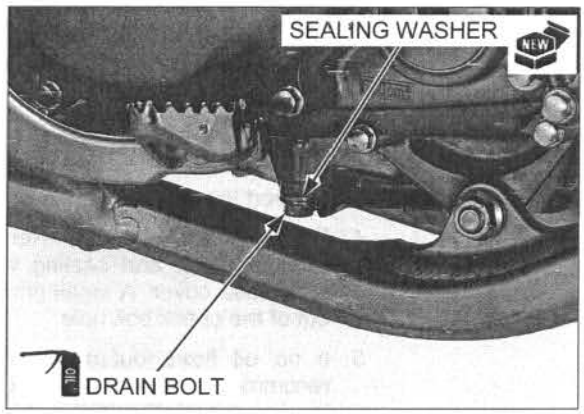

Fill the engine with the recommended engine oil (page 4-15).

ENGINE OIL CAPACITY:
0.58 liter (0.61 US qt, 0.51 Imp qt) at draining
0.62 liter (0.66 US qt, 0.55 Imp qt) at oil filter change
0.77 liter (0.81 US qt, 0.68 Imp qt) at disassembly

Install the oil filler cap/dipstick.

Recheck the oil level (page 4-15).

Make sure there are no oil leaks.

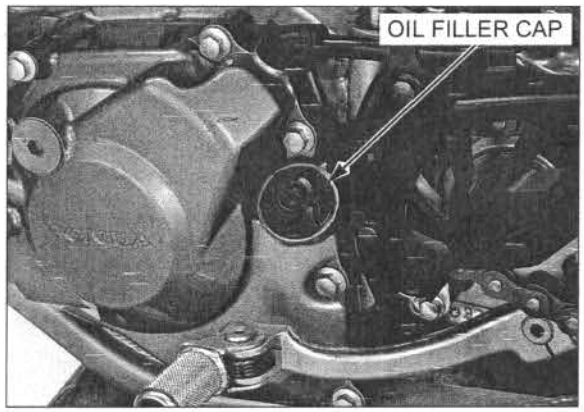

ENGINE IDLE SPEED

- Inspect and adjust the idle speed after all other engine maintenance items have been performed and are within specifications.
- Before checking the idle speed, inspect the following items.
  - No DTC and MIL blinking
  - Spark plug condition (page 4-10)
  - Air cleaner condition (page 4-8)
- The engine must be warm for accurate idle speed inspection.
- Use a tachometer with graduations of 50 rpm or smaller that will accurately indicate a 50 rpm change.

Start the engine and warm it up to coolant temperature 80°C (176°F).
Stop the engine and connect a tachometer according to the tachometer manufacturer's operating instructions.

Start the engine and let it idle. Turn the fast idle knob to obtain the specified idle speed.

IDLE SPEED:
'09: 1,750 ± 100 rpm
After '09: 1,800 ± 100 rpm

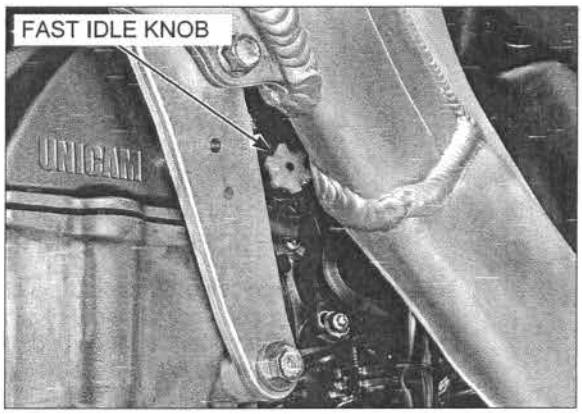

TRANSMISSION OIL

OIL LEVEL INSPECTION

1. Start the engine and let it idle for 3 minutes.
2. Stop the engine and wait 3 minutes.
3. Support the motorcycle upright on a level surface.
4. Remove the oil filler cap. Remove the transmission oil check bolt and sealing washer from the right crankcase cover. A small amount of oil should flow out of the check bolt hole.
5. If no oil flows out of the check bolt hole, add recommended transmission oil (page 4-19) slowly through the oil filler hole until oil starts to flow out of the check bolt hole. Install and tighten the transmission oil check bolt and filler cap.
6. Repeat steps 1 – 5.

   After checking the oil level or adding transmission oil, and tighten the transmission oil check bolt to the specified torque with a new sealing washer.

   TORQUE: 12 N·m (1.2 kgf·m, 9 lbf·ft)

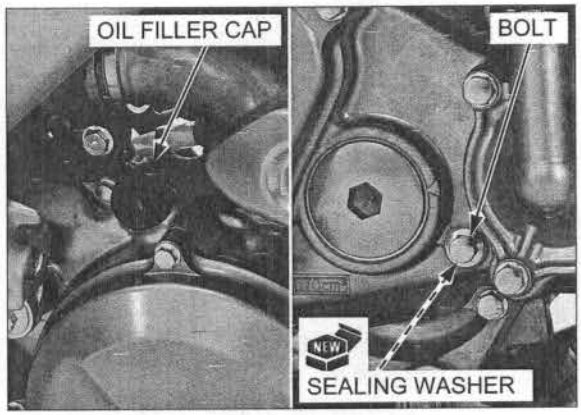

Check the O-ring is in good condition, replace it if necessary.

Install the oil filler cap.

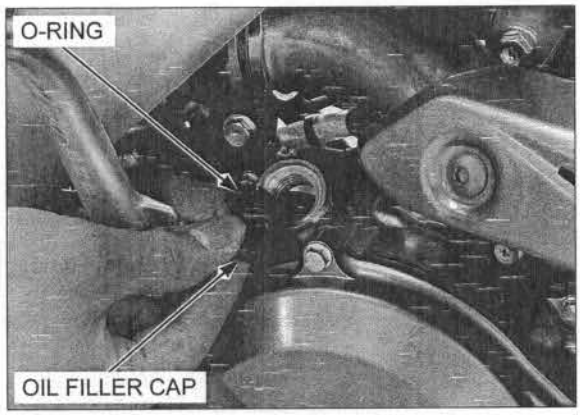

TRANSMISSION OIL CHANGE

- Transmission oil should be changed at least every six races or 15 hours of operation to ensure consistent performance and maximum service life of both transmission and clutch components.

Support the motorcycle upright on a level surface.

Remove the oil filler cap from the right crankcase cover. Place an oil pan under the engine to catch the transmission oil, then remove the transmission oil drain bolt and sealing washer.

After the transmission oil has drained completely.
Apply engine oil to the transmission oil drain bolt threads and seating surface.
Install a new sealing washer to the transmission oil drain bolt, and install them to the left crankcase.

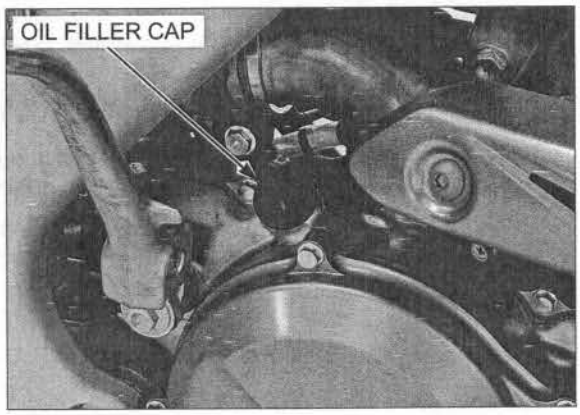

Tighten the transmission oil drain bolt to the specified torque.

TORQUE: 16 N·m (1.6 kgf·m, 12 lbf·ft)

Fill the engine with the recommended transmission oil.

RECOMMENDED TRANSMISSION OIL:
Pro Honda GN4 4-stroke oil (U.S.A. and Canada) or equivalent motor oil
API service classification: SG or Higher
JASO T 903 standard: MA
Viscosity: SAE 10W-30

TRANSMISSION OIL CAPACITY:
0.59 liter (0.62 US qt, 0.52 Imp qt) at draining
0.67 liter (0.71 US qt, 0.59 Imp qt) at disassembly

Check the oil level by following steps 1 – 6 in the oil level check procedure (page 4-18).

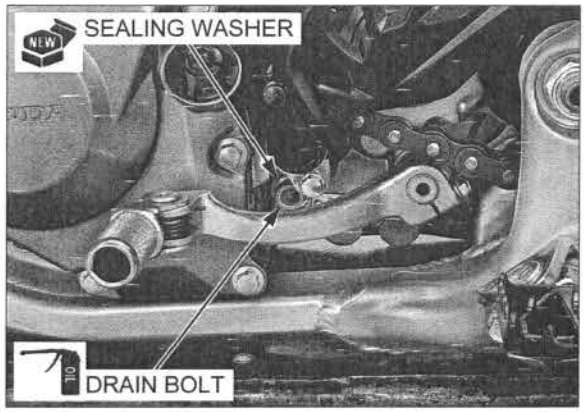

COOLING SYSTEM

Remove the following:

- Radiator shrouds (page 3-4)
- Radiator grills (page 7-8)

Check the radiator air passages for clogging or damage.
Straighten bent fins, and remove insects, mud or other obstructions with compressed air or low water pressure. Replace the radiator if the air flow is restricted over more than 20% of the radiating surface.

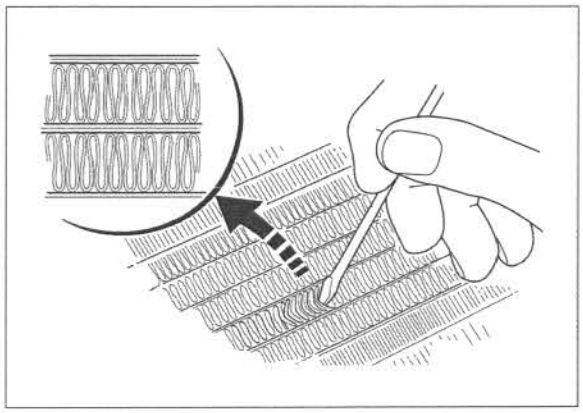

Inspect the radiator hoses for cracks and deterioration. Check the tightness of all hose band screws (page 7-11).

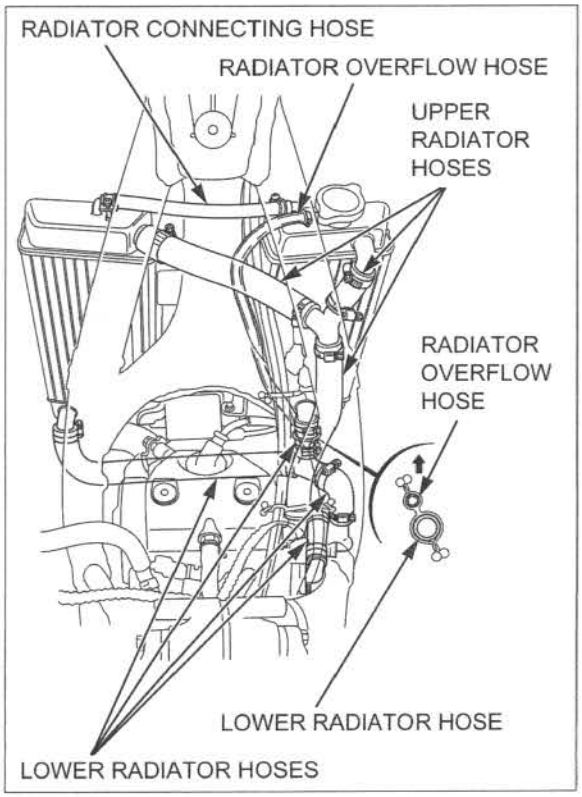

DRIVE CHAIN

CLEANING AND LUBRICATION

- For maximum service life, the drive chain should be cleaned and lubricated after every ride.

Perform the following service with the engine stopped and shift the transmission into neutral.

Place a workstand or equivalent under the engine.

Be careful not to damage the harness guide of the drive sprocket cover.

Remove the bolts, drive sprocket cover and drive chain guide.

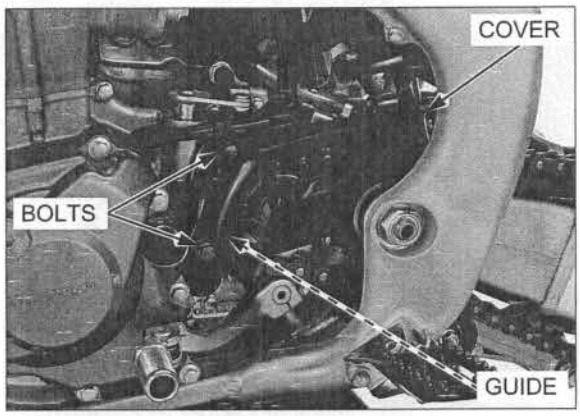

Carefully remove the master link clip with pliers.

Remove the master link, link plate and disconnect the drive chain.
Remove the drive chain.

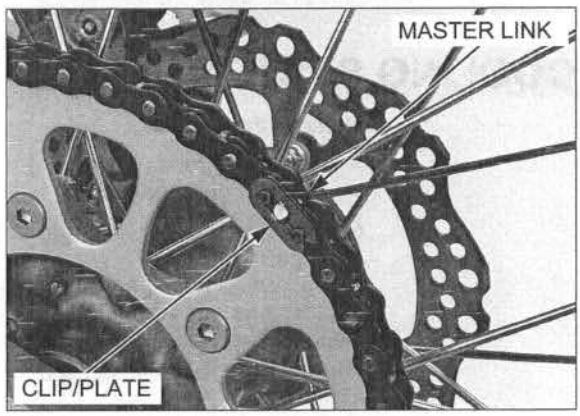

Clean the chain with non-flammable or high flash point solvent and wipe it dry.
Be sure the chain has dried completely before lubricating.
Inspect the drive chain for possible damage or wear.

Replace any chain that has damaged rollers, loose fitting links, or otherwise appears unserviceable.

Installing a new chain on badly worn sprockets will cause a new chain to wear quickly.
Inspect and replace sprocket as necessary.

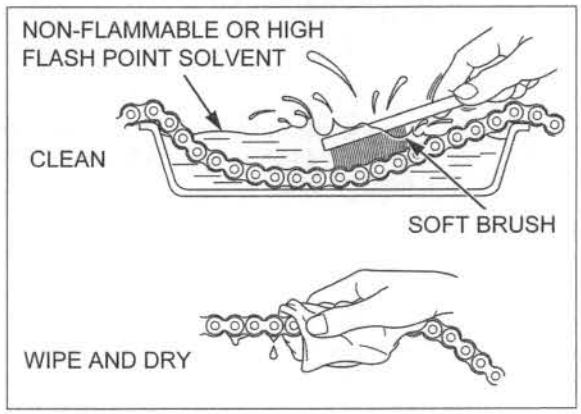

Measure the distance between a span of 17 pins (16 pitches) from pin center to pin center with the chain held taut and any kinked joint straightened.

SERVICE LIMIT: 259 mm (10.2 in)

If the measurement exceeds the service limit, replace the chain.

REPLACEMENT CHAIN:
DID 520DMA4/116RB
RK 520TXZ-116RJ

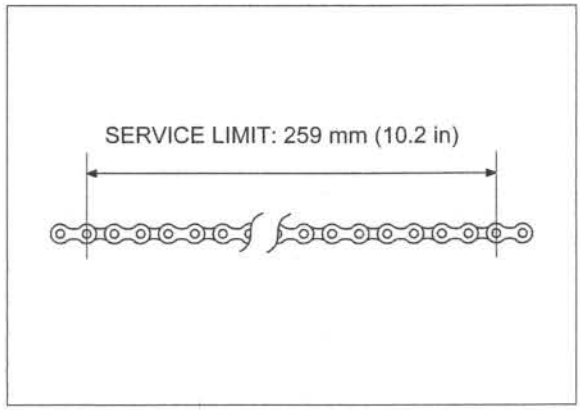

Lubricate the drive chain with #80 – 90 gear oil or drive chain lubricant.
Wipe off any excess oil or chain lubricant.

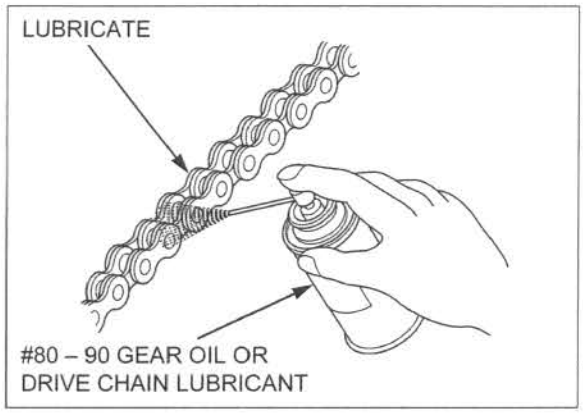

Check the master link clip is in good condition, and replace it if necessary.

Install the drive chain onto the sprockets.
Install the master link and link plate.

Install the open end of the master link clip opposite the direction of chain travel.

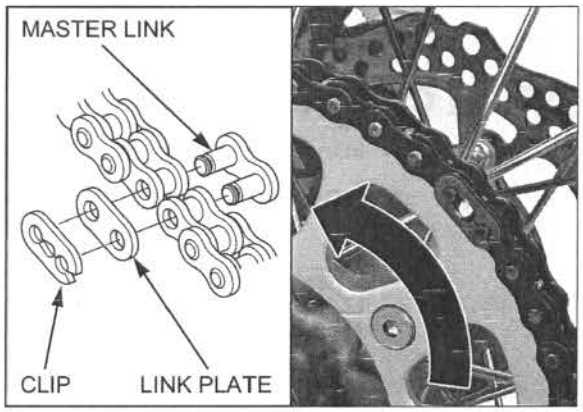

Route the wires properly (page 1-19).

Install the drive chain guide, drive sprocket cover and bolts.
Tighten the bolts securely.

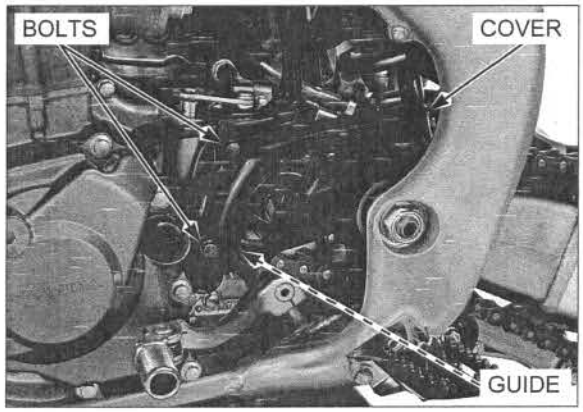

DRIVE CHAIN SLACK INSPECTION

Raise the rear wheel off the ground by placing a workstand under the engine.

⚠WARNING

Amputation hazard. Never inspect or adjust the drive chain while the engine is running.

Measure the chain slack, on the upper chain run, midway between the sprockets.

CHAIN SLACK:30 – 40 mm (1.2 – 1.6 in)

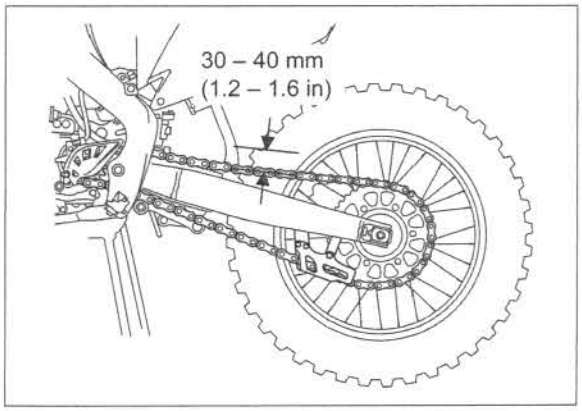

NOTICE

Excessive chain slack, 55 mm (2.2 in) or more, may damage the frame.

ADJUSTMENT

If the chain needs adjustment, loosen the rear axle nut and drive chain adjuster lock nuts, and turn the adjusting bolts.

Check that the adjusting block index marks are in the same position on each side, then tighten the rear axle nut to the specified torque.

TORQUE: 128 N·m (13.1 kgf·m, 94 lbf·ft)

After torquing the axle nut, seat the adjusting bolts snugly against the adjusting block, and tighten the drive chain adjuster lock nut to the specified torque while holding the adjusting bolt.

TORQUE: 27 N·m (2.8 kgf·m, 20 lbf·ft)

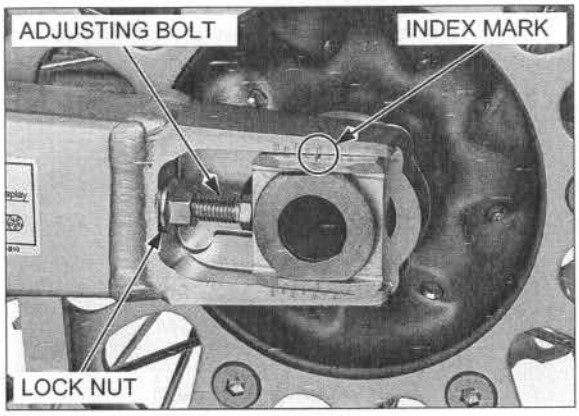

DRIVE CHAIN SLIDER

Inspect the drive chain slider for excessive wear.

SERVICE LIMITS: Upper side: 5 mm (0.2 in)
Lower side: 2.5 mm (0.10 in)

NOTICE

If the chain slider becomes worn through to the swingarm, the chain will wear against the swingarm, damaging the chain and swingarm.

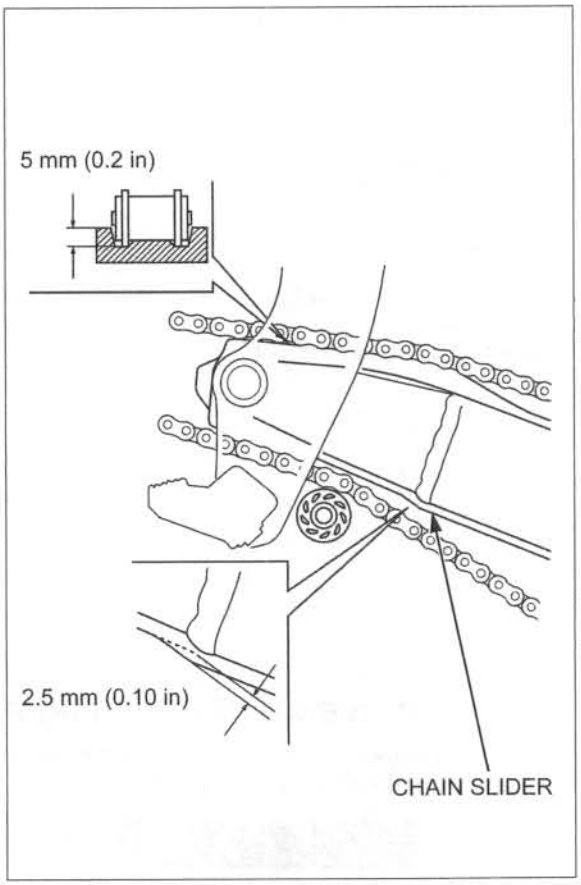

Check the chain guide and chain guide slider for alignment, wear or damage.

Replace the chain guide if it is damaged or worn.

Replace the chain guide slider if the slider is worn to the bottom of the wear limit indicator.

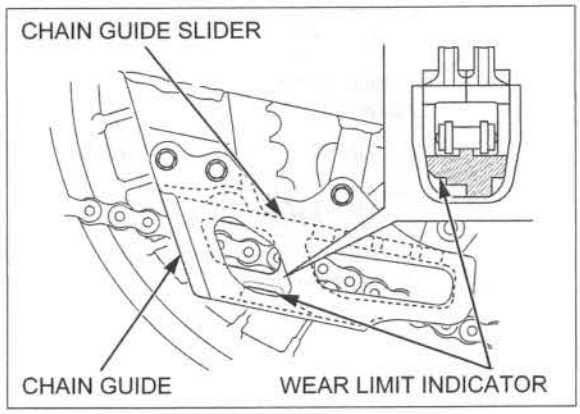

DRIVE CHAIN ROLLER

Inspect the drive chain rollers for excessive wear or binding.

Measure the upper and lower drive chain rollers O.D.

SERVICE LIMIT: 35 mm (1.4 in)

Replace the drive chain roller if necessary.

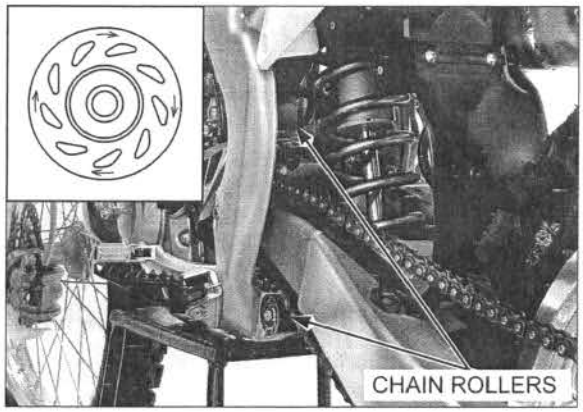

Upper: Green
Lower: Black

Install the drive chain rollers with the "↑"mark facing the opposite side of the frame.

Install and tighten the drive chain roller bolt and nut to the specified torque.

TORQUE:
Drive chain upper roller bolt:
12 N·m (1.2 kgf·m, 9 lbf·ft)
Drive chain lower roller nut:
12 N·m (1.2 kgf·m, 9 lbf·ft)

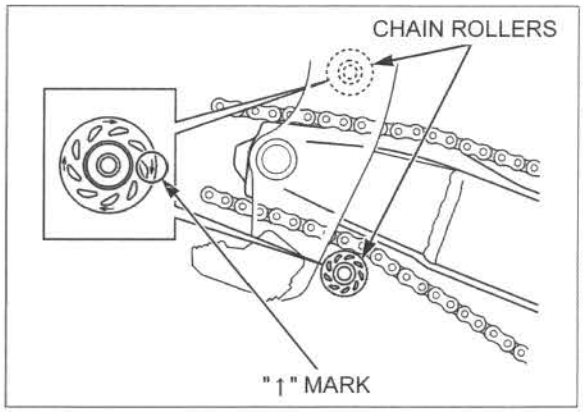

DRIVE/DRIVEN SPROCKET

Inspect the drive and driven sprocket teeth for wear or damage, replace them if necessary.

Never use a new drive chain on worn sprockets.
Both chain and sprockets must be in good condition, or the new replacement chain will wear rapidly.

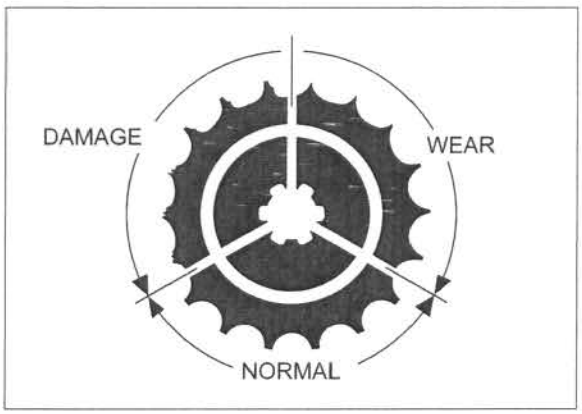

Check the bolts and nuts on the drive and driven sprockets.
If any are loose, torque them.

TORQUE:
Drive sprocket bolt: 31 N·m (3.2 kgf·m, 23 lbf·ft)
Driven sprocket nut: 32 N·m (3.3 kgf·m, 24 lbf·ft)

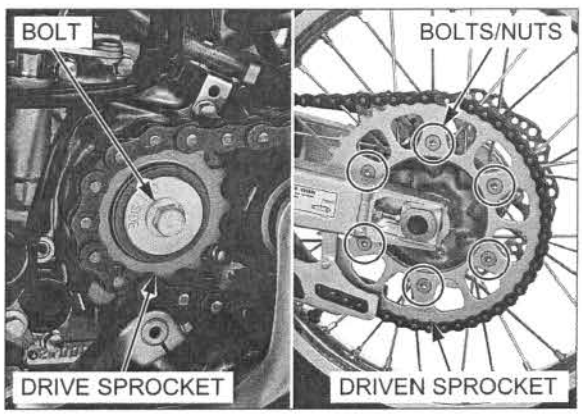

BRAKE FLUID

NOTICE

Spilled fluid can damage painted, plastic or rubber parts. Place a rag over these parts whenever the system is serviced.

- Do not mix different types of fluid, as they are not compatible with each other.
- Do not allow foreign material to enter the system when filling the reservoir.

FLUID LEVEL INSPECTION

When the fluid level is low, check the brake pads for wear (page 4-25).
A low fluid level may be due to wear of the brake pads. If the brake pads are worn, the caliper piston is pushed out, and this accounts for a low reservoir level.
If the brake pads are not worn and the fluid level is low, check the entire system for leaks (page 4-24).

FRONT:

Turn the handlebar so that the reservoir is level and check the brake fluid level.
If the level is near the lower level line, check the brake pad wear (page 4-25).

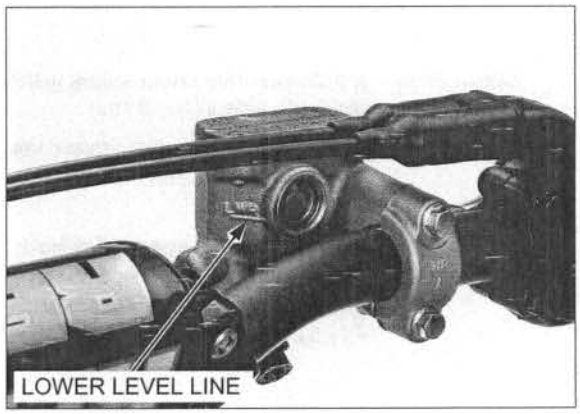

REAR:

Support the motorcycle upright on a level surface.
If the level is near the lower level line, check the brake pad wear (page 4-25).

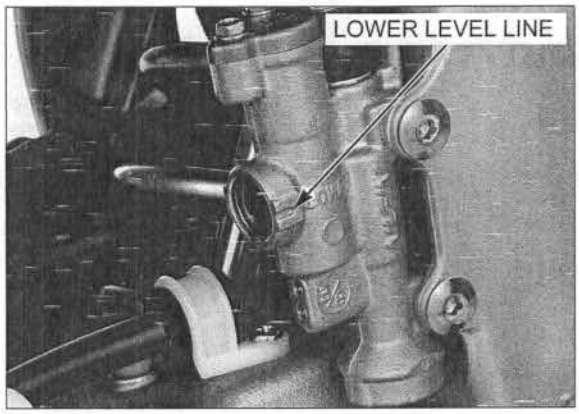

FLUID FILLING

FRONT:

Remove the screws, reservoir cover and diaphragm and fill the reservoir with DOT 4 brake fluid to the upper level line.

Install the diaphragm and reservoir cover.
Install and tighten the screws to the specified torque.

TORQUE: 1.0 N·m (0.1 kgf·m, 0.7 lbf·ft)

Check the entire system for leaks.

Inspect the brake hose and fittings for deterioration, cracks or signs of leakage. Tighten any loose fittings.

Replace the hose and fittings as required.

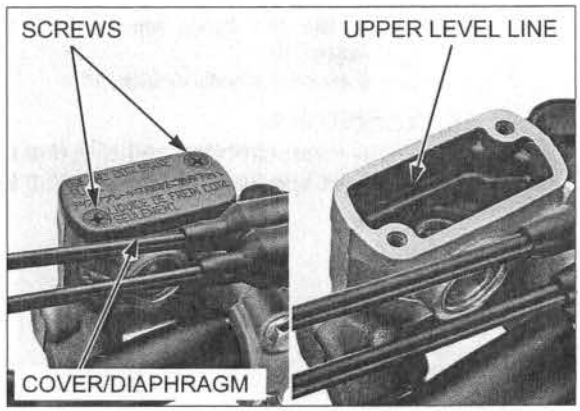

REAR:

Remove the bolts, reservoir cover, plate and diaphragm and fill the reservoir with DOT 4 brake fluid to the upper level line.

Do not bend the diaphragm during installation.

Install the diaphragm, plate and cover.
Install and tighten the bolts to the specified torque.

TORQUE: 1.0 N·m (0.1 kgf·m, 0.7 lbf·ft)

Check the entire system for leaks.

Inspect the brake hose and fittings for deterioration, cracks or signs of leakage. Tighten any loose fittings.

Replace the hose and fittings as required.

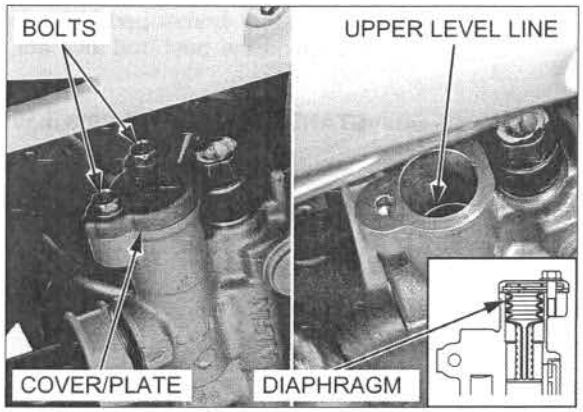

BRAKE PAD WEAR

Inspect the pads. If either pad is worn anywhere to a thickness of 1.0 mm (0.04 in), both pads must be replaced.

For brake pad replacement

- Front (page 16-11)
- Rear (page 16-13)

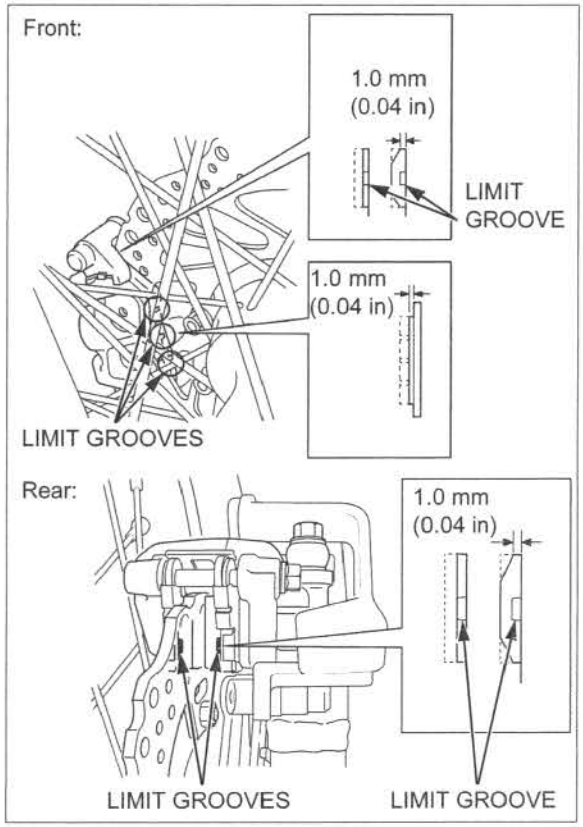

BRAKE SYSTEM

BRAKE LEVER POSITION

The brake lever position can be adjusted by loosening the adjuster lock nut, and turning the adjusting bolt.

Turning the adjusting bolt clockwise moves the brake lever farther away from the grip; turning the adjusting bolt counterclockwise moves the brake lever closer to the grip.

Apply silicone grease to the adjusting bolt tip.

After adjustment, tighten the adjuster lock nut to the specified torque while holding the adjusting bolt.

TORQUE: 5.9 N·m (0.6 kgf·m, 4.4 lbf·ft)

If the brake lever freeplay exceeds 20 mm (13/16 in), there is air in the system that must be bled.
For brake system air bleeding (page 16-7).

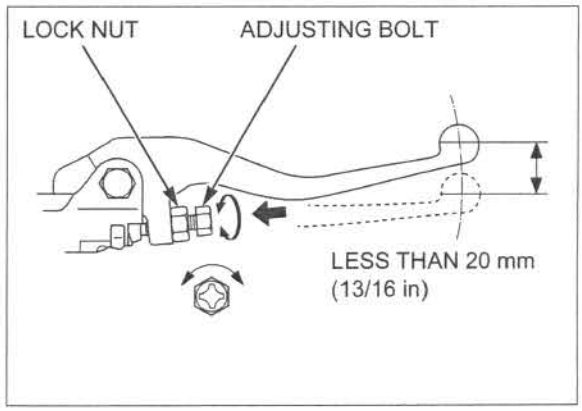

BRAKE PEDAL HEIGHT

Adjust the brake pedal to the desired height by loosening the push rod lock nut, and turning the push rod.

STANDARD LENGTH: 79.6 mm (3.13 in)

Tighten the push rod lock nut to the specified torque.

TORQUE: 5.9 N·m (0.6 kgf·m, 4.4 lbf·ft)

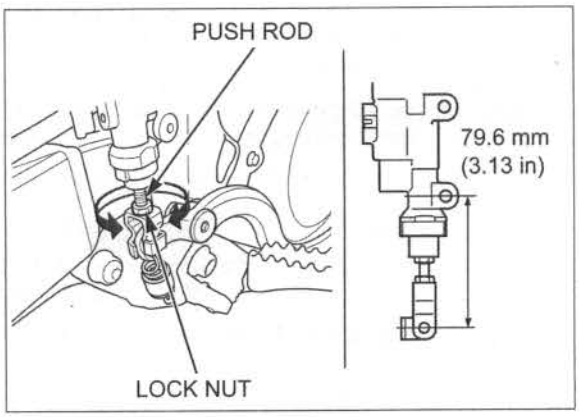

CLUTCH SYSTEM

CLUTCH LEVER POSITION

Make sure to adjust the clutch lever freeplay after the clutch lever position adjustment or when the clutch cable is disconnected.

The clutch lever position can be adjusted by loosening the adjuster lock nut, and turning the adjusting bolt.

Turning the adjusting bolt counterclockwise moves the clutch lever farther away from the grip; turning the adjusting bolt clockwise moves the clutch lever closer to the grip.

After adjustment, tighten the adjuster lock nut securely while holding the adjusting bolt.

Check the clutch lever freeplay (page 4-27).

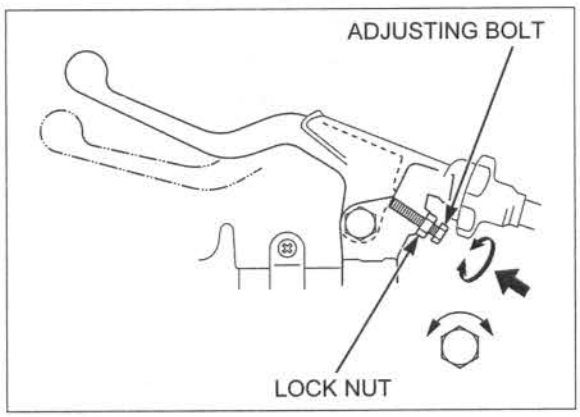

NOTICE

Failure to check the clutch lever freeplay may result in damaged clutch plates.

Turn the cable end adjuster in direction A until it seats lightly and then turn it out 5 turns in direction B.

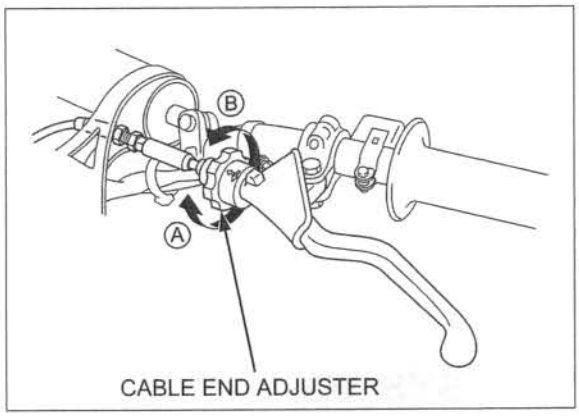

Loosen the adjuster lock nut, and turn the in-line cable adjuster to adjust the clutch lever freeplay 10 – 20 mm (3/8 – 13/16 in) at the tip of lever.

After adjustment, tighten the adjuster lock nut securely while holding the adjuster.

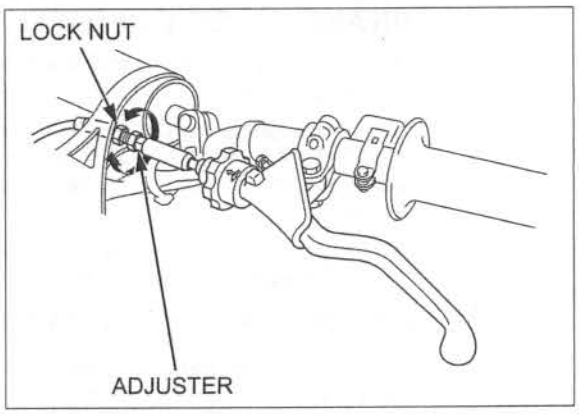

Adjust the clutch cable end adjuster for minor adjustment.

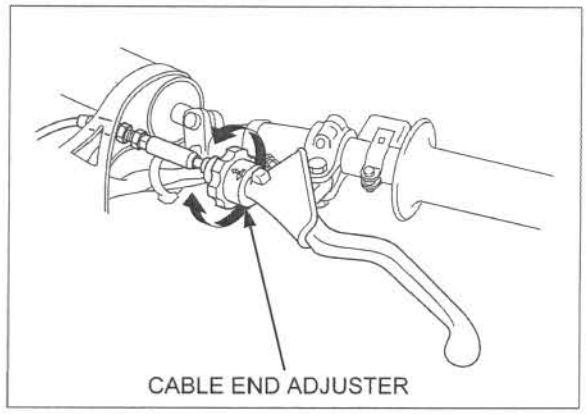

CLUTCH LEVER FREEPLAY

Measure the clutch lever freeplay at the lever end.

FREEPLAY:10 – 20 mm (3/8 – 13/16 in)

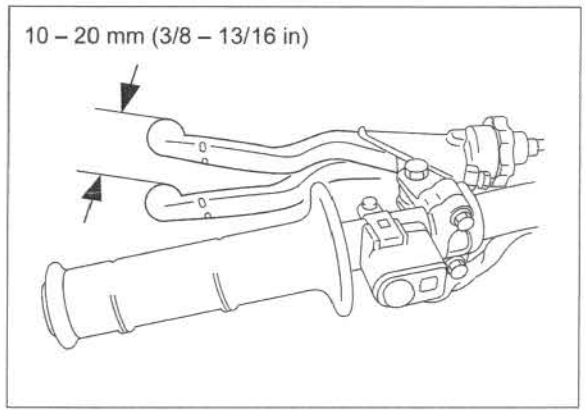

Minor adjustments can be made at the cable end adjuster.

Turning the cable end adjuster in direction A will increase freeplay and turning it in direction B will decrease freeplay.

If the adjuster is threaded out near its limit and the correct freeplay cannot be reached, turn the adjuster in direction A until it seats lightly and then turn it out one turn in direction B.
Make the adjustment with the in-line cable adjuster.

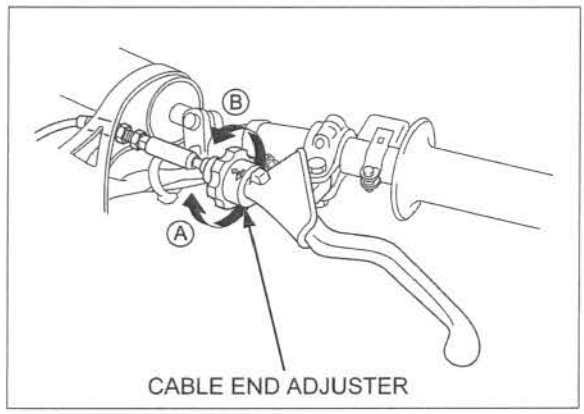

Major adjustments can be made with the in-line cable adjuster located behind the number plate.

Loosen the adjuster lock nut and turn the adjuster.
Turning the adjuster in direction C will decrease freeplay and turning it in direction D will increase freeplay.

After adjustment, tighten the adjuster lock nut securely while holding the adjuster.

Test ride to be sure the clutch operates properly without slipping or dragging.

If proper freeplay cannot be obtained using both procedures or the clutch slips during the test ride, disassemble and inspect the clutch (page 11-9).

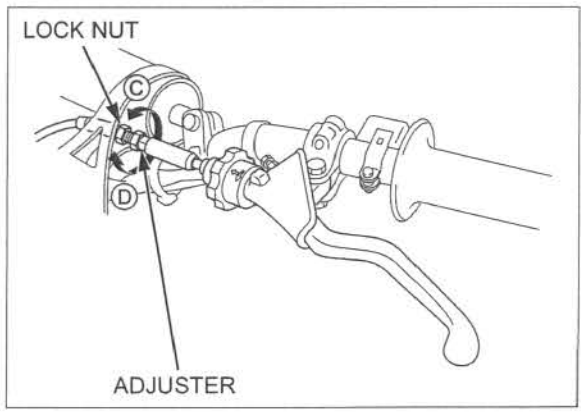

CONTROL CABLES

Remove the dust cover.
Remove the throttle housing bolts.

Disconnect the throttle cables from the throttle pipe, and remove the throttle housing.

It is not necessary to lubricate the entire cable.

Thoroughly lubricate the cable ends with a commercially available cable lubricant.

If the throttle operation is not smooth, replace the cable.

Be sure the throttle returns freely from fully open to fully closed automatically, in all steering positions.

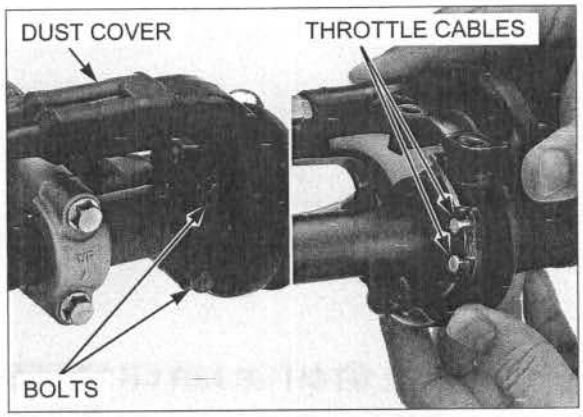

Release the clutch lever cover.
Turn the adjuster, and remove the clutch cable.

Disconnect the clutch cable and hot start cable from the levers.

It is not necessary to lubricate the entire cable.

Thoroughly lubricate the cable ends with a commercially available cable lubricant.

If the clutch lever and hot start lever operation is not smooth, replace the cable.

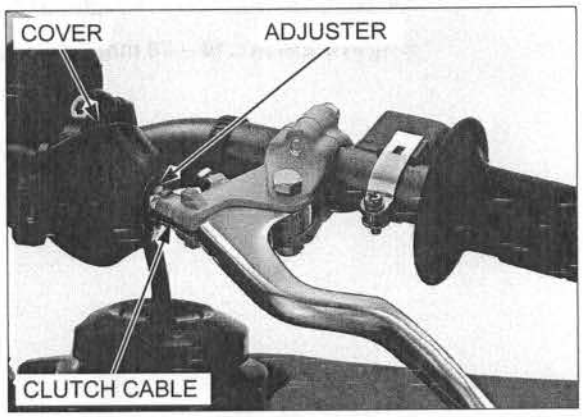

Remove the clutch cable end adjuster.

Apply grease to the clutch cable end adjuster inside surface.

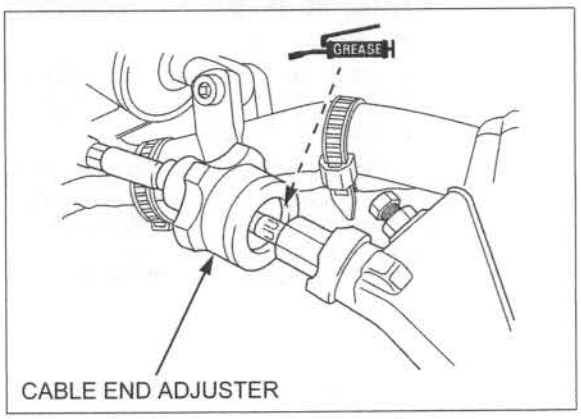

EXHAUST PIPE/MUFFLER

EXHAUST SYSTEM INSPECTION

Check the joint band bolt and joint nut for looseness and exhaust gas leaks.

Tighten each bolt and nut of the exhaust system to the specified torque.

TORQUE:
Exhaust pipe joint nut: 21 N·m (2.1 kgf·m, 15 lbf·ft)
Muffler joint band bolt: 21 N·m (2.1 kgf·m, 15 lbf·ft)

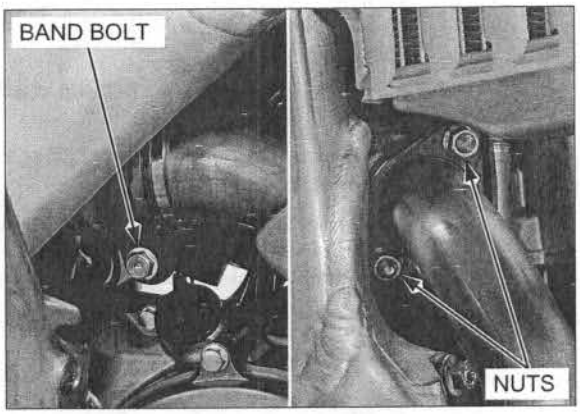

GLASS WOOL REPLACEMENT

Remove the muffler (page 3-8).

Do not overtighten the vise and distort the muffler mount stay.

Set the muffler in a vise with pieces of wood or soft jaws to avoid damage.

Remove the rivets with a 4.0 mm and 10 mm drills using the following procedures:

1. Drill the rivet head with a 4.0 mm drill to the specified depth as shown.
2. Drill the rivet head with a 10 mm drill so that the rivet can be removed into the muffler body, then remove the rivet.

NOTE:
Be careful not to damage the muffler body.

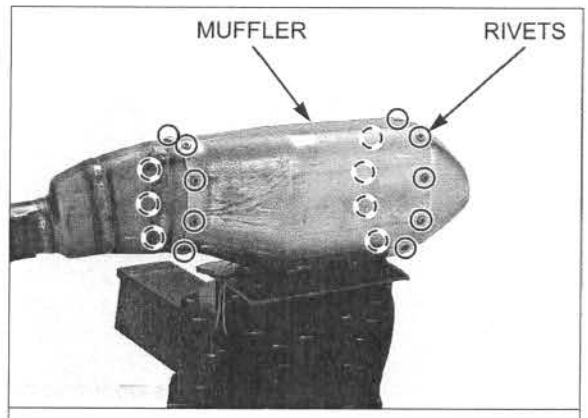

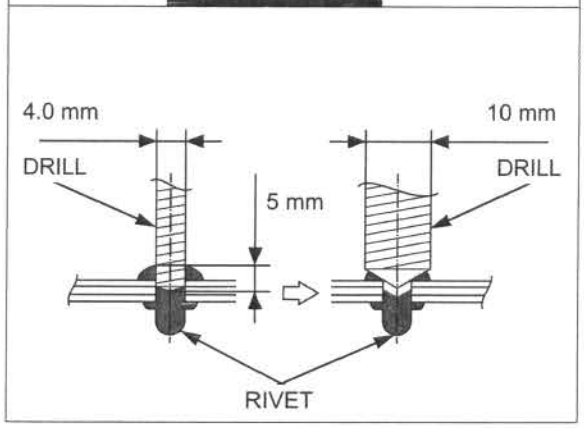

Remove the following:

- Front pipe
- Glass wool B
- Muffler body
- End cover
- Tail glass wool
- Center glass wool
- Stainless wool
- Inner pipe

Clean off the sealant from the muffler body, front pipe, end cover and inner pipe.

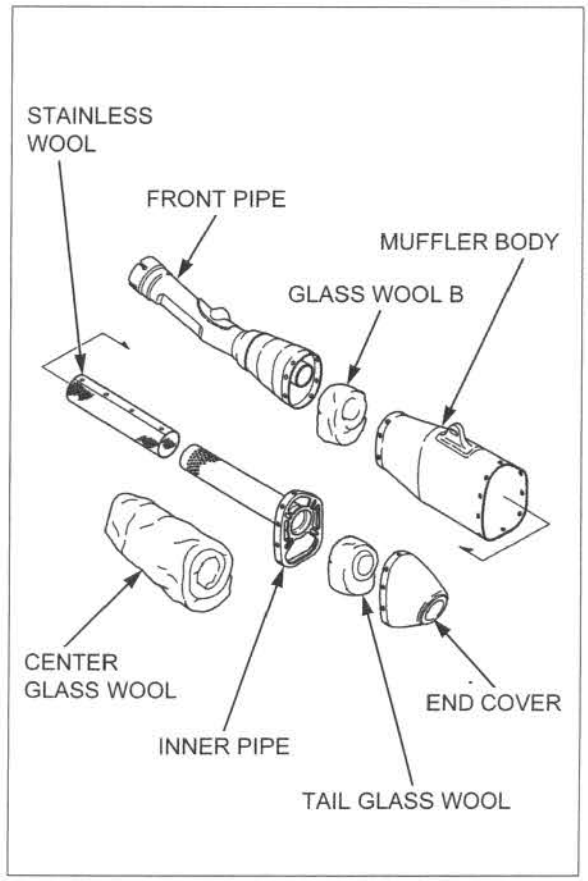

Install new glass wool B into the front pipe as shown.

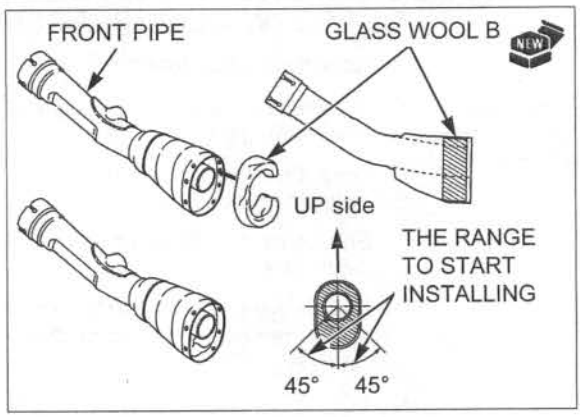

Install new stainless wool onto the inner pipe.

Install new center glass wool to the inner pipe assembly.

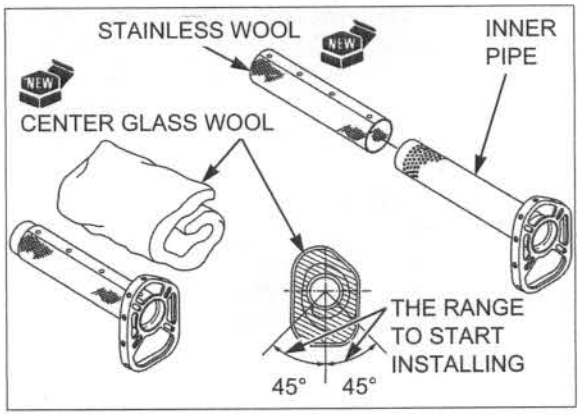

Apply 5.0 g (0.18 oz) of muffler sealant (high-temperature silicone) to the front pipe as shown.

Install the muffler body onto the front pipe.

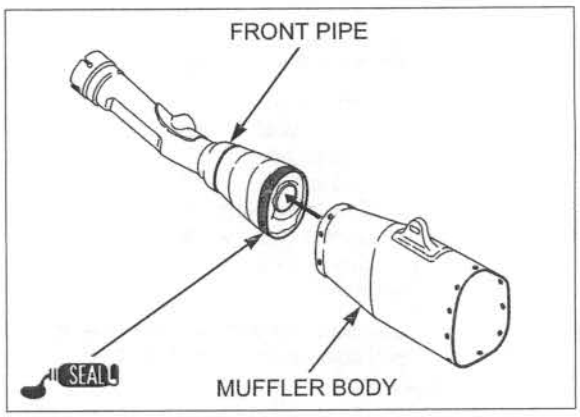

Apply 5.0 g (0.18 oz) of muffler sealant (high-temperature silicone) to the inner pipe assembly as shown.

Install the inner pipe assembly into the muffler body assembly by inserting the inner pipe end into the front pipe end.

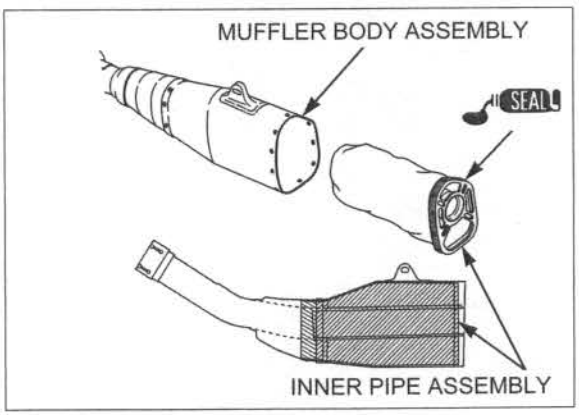

Install new tail glass wool into the end cover as shown.

Apply 5.0 g (0.18 oz) of muffler sealant (high-temperature silicone) to the end cover as shown.

Install the end cover between the inner pipe assembly and muffler body assembly.
Align each rivet hole and install new rivets.

Install the muffler (page 3-8).

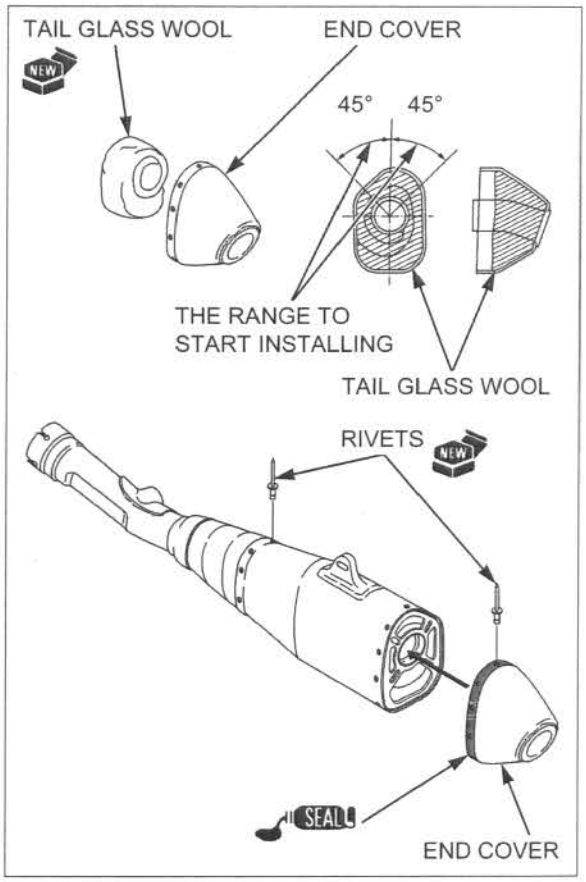

SUSPENSION

FRONT SUSPENSION INSPECTION

Check the action of the forks by operating the front brake, and compressing it several times.
Check the entire assembly for signs of leaks, damage or loose fasteners.

Make sure the fork protectors and dust seals are clean and not packed with mud and dirt.
Remove any dirt that has accumulated on the bottom of the fork seals.

Replace damaged components which cannot be repaired.
Tighten all nuts and bolts.

For fork service (page 14-14).

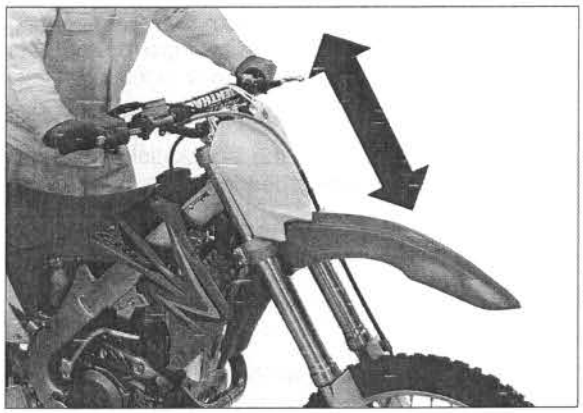

Air pressure acts as a progressive spring and affects the entire range of fork travel.

Air is an unstable gas; it increases in pressure as it is worked (such as in a fork), so the fork action on this motorcycle will get stiffer as the race progresses.

Release built-up air pressure from the fork legs after practice and between motos.
Be sure the fork is fully extended with the front tire off the ground.
Loosen the plug bolts fully, then tighten them to the specified to torque.

TORQUE: 1.2 N·m (0.1 kgf·m, 0.9 lbf·ft)

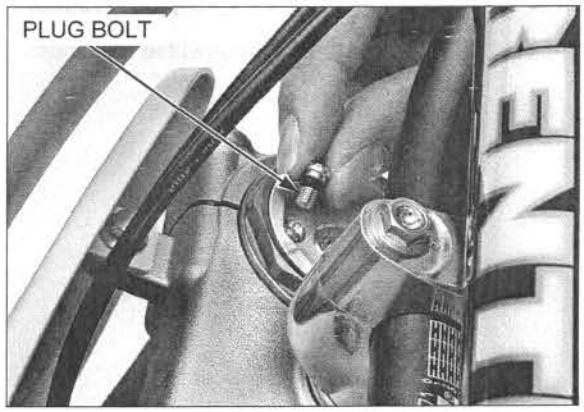

REAR SUSPENSION INSPECTION

Check the action of the shock absorber by compressing it several times.

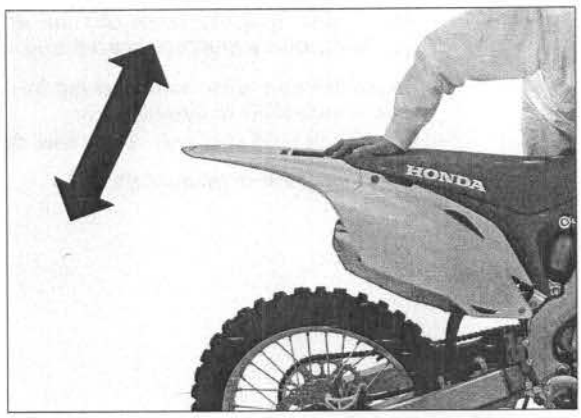

Remove the sub-frame (page 3-6).

Check the entire shock absorber assembly for signs of leaks, damage or loose fasteners.

Replace damaged components which cannot be repaired.
Tighten all nuts and bolts.

For shock absorber service (page 15-14).

Install the sub-frame (page 3-7).

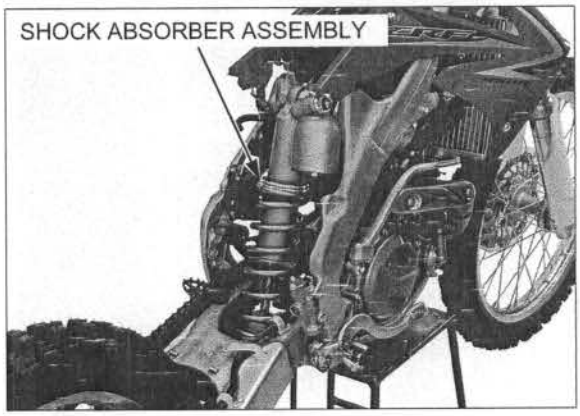

SWINGARM/SHOCK LINKAGE

Raise the rear wheel off the ground by placing a workstand or equivalent under the engine.

Check for worn swingarm bearings by grabbing the rear end of the swingarm and attempting to move the swingarm side-to-side.

Replace the bearings if excessively worn (page 15-39).

Check the shock linkage and replace any damaged needle bearings.

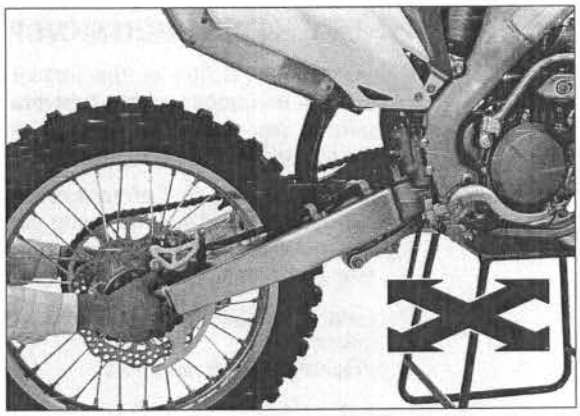

Disassemble, clean, inspect the swingarm and shock linkage pivot bearings and related seals every three races or about 7.5 hours of operation (page 15-32).

Lubricate and reassemble them.

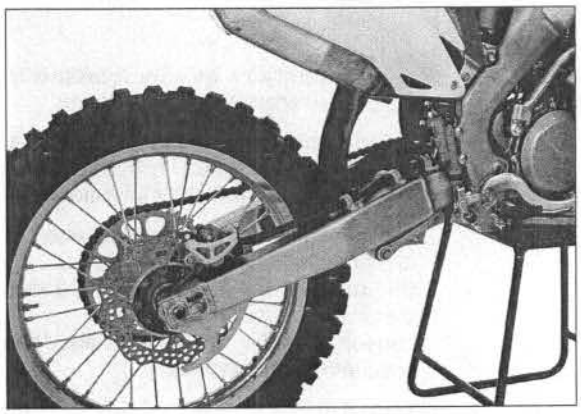

NUTS, BOLTS, FASTENERS

Check that all chassis nuts and bolts are tightened to their correct torque values (page 1-11).

Check that all safety clips, hose clamps and cable stays are in place and properly secured.

WHEELS/TIRES

Raise the front wheel off the ground by placing a workstand or equivalent under the engine.

Hold the front fork leg and move the front wheel sideways with force to see if the wheel bearings are worn.

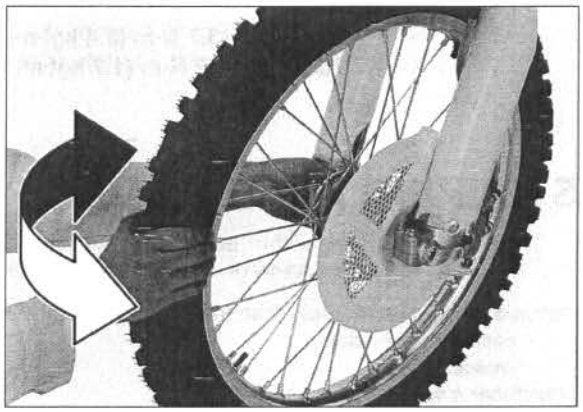

Raise the rear wheel off the ground by placing a workstand or equivalent under the engine.

Hold the swingarm, and move the rear wheel sideways with force to see if the wheel bearings are worn.

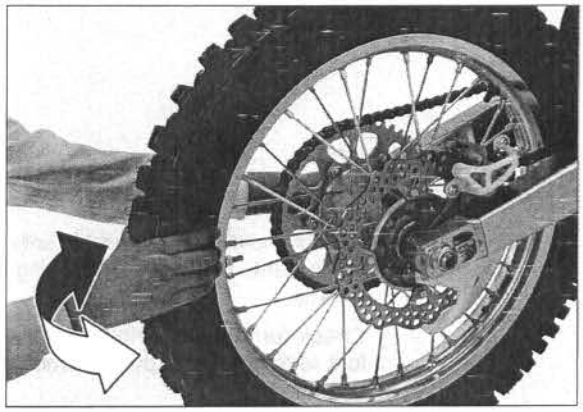

Check the tires for cuts, embedded nails, or other damage.
Check the front wheel (page 14-8) and rear wheel (page 15-8) for trueness.

Tire pressure should be checked when the tires are cold.

Check the cold tire pressure.

TIRE PRESSURE:
FRONT: 100 kPa (1.0 kgf/cm^2, 15 psi)
REAR: 100 kPa (1.0 kgf/cm^2, 15 psi)

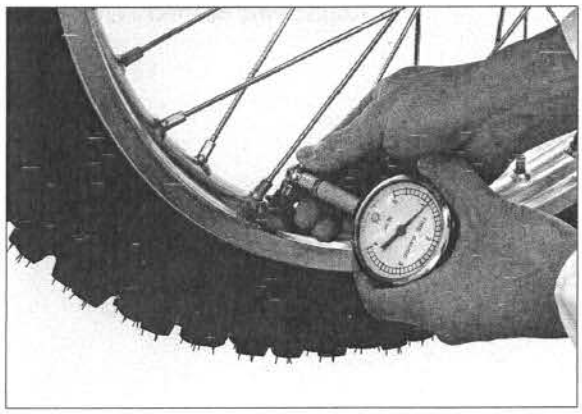

Inspect the wheel rims and spokes for damage.

Tighten any loose spokes and rim locks to the specified torque using the special tool.

TOOLS:

FRONT:

Spoke wrench, 6.1 mm	**07JMA-MR60100**

REAR:

Spoke wrench, 6.6 mm	**070MA-KZ30100**

TORQUE:

Spoke: 3.7 N·m (0.4 kgf·m, 2.7 lbf·ft)
Rim lock: 12 N·m (1.2 kgf·m, 9 lbf·ft)

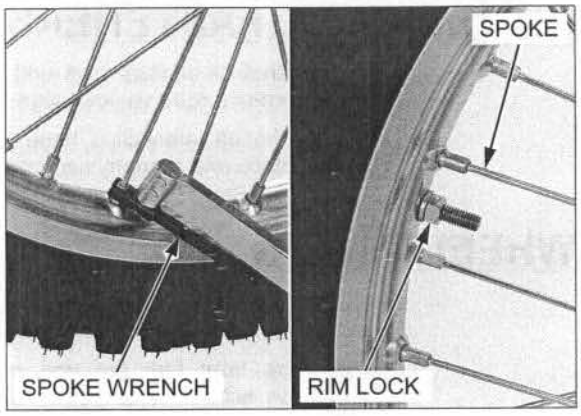

STEERING HEAD BEARINGS

Raise the front wheel off the ground by placing a workstand or equivalent under the engine.

Be sure the control cables do not interfere with handlebar rotation.

Check that the handlebar moves freely from side-to-side.

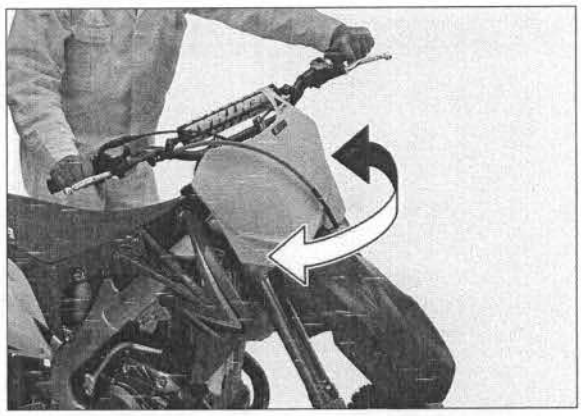

If the handlebar moves unevenly, binds, or has vertical movement, inspect the steering head bearings (page 14-48).

Check for worn steering head bearing by grabbing the fork legs and attempting to move the front fork forward to backward.

Replace the bearing if any looseness is noted.

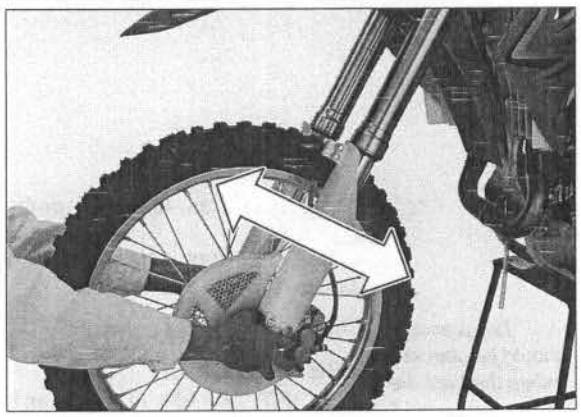

5. LUBRICATION SYSTEM

5

LUBRICATION SYSTEM DIAGRAM

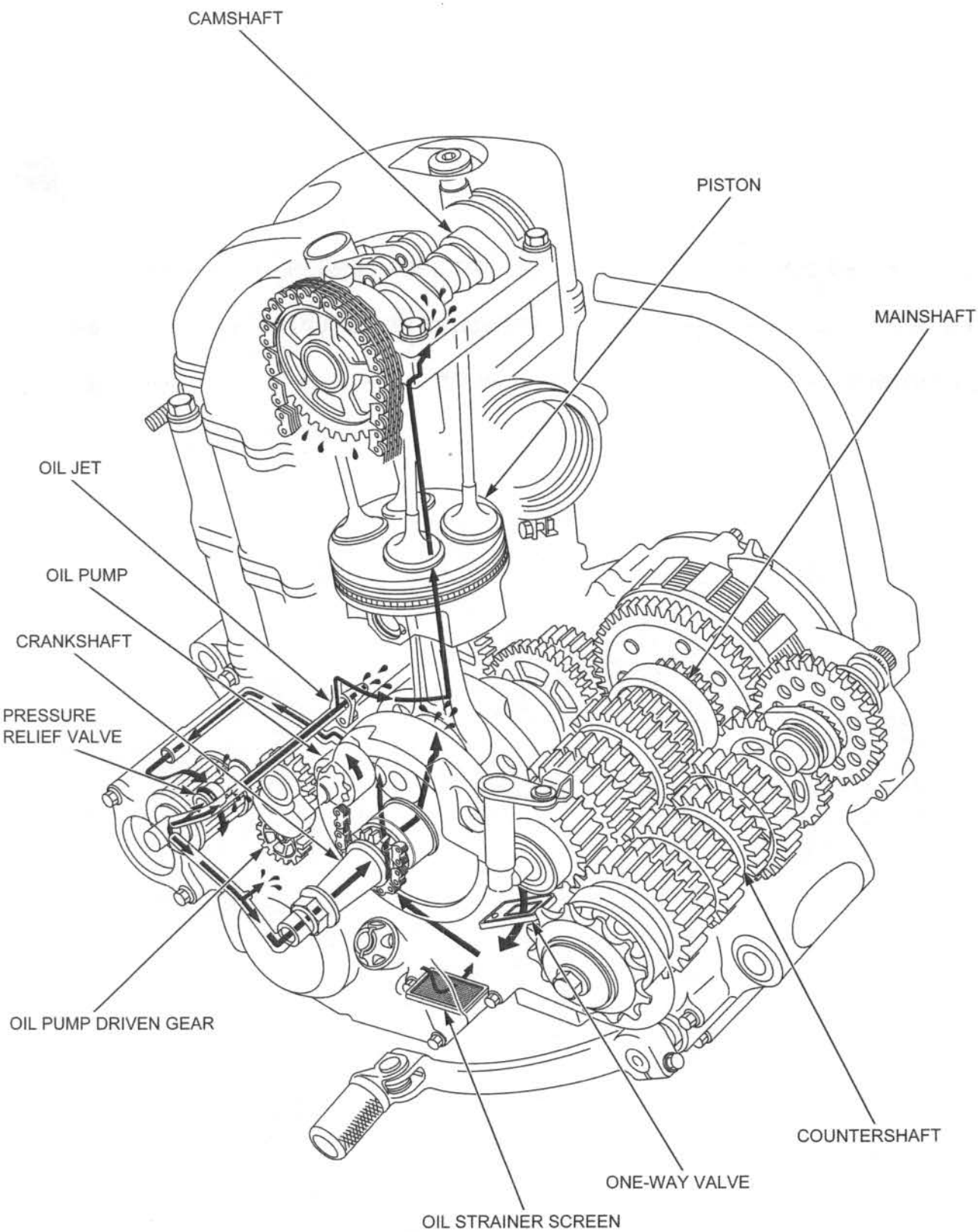

SERVICE INFORMATION

GENERAL

⚠ CAUTION

Used engine oil may cause skin cancer if repeatedly left in contact with the skin for prolonged periods. Although this is unlikely unless you handle used oil on a daily basis, it is still advisable to thoroughly wash your hands with soap and water as soon as possible after handling used oil.

- The oil pump and one-way valve service requires crankcase separation.
- The service procedures in this section must be preformed with the engine oil and transmission oil drained.
- When servicing the oil pump, use care not to allow dust or dirt to enter the engine.
- If any portion of the oil pump is worn beyond the specified service limits, replace the oil pump as an assembly.
- The pressure relief valve and oil strainer screen can be serviced with the engine installed in the frame.

SPECIFICATIONS

Unit: mm (in)

ITEM		STANDARD	SERVICE LIMIT
Engine oil capacity	At draining	0.58 liter (0.61 US qt, 0.51 Imp qt)	–
	At oil filter change	0.62 liter (0.66 US qt, 0.55 Imp qt)	–
	At disassembly	0.77 liter (0.81 US qt, 0.68 Imp qt)	–
Transmission oil capacity	At draining	0.59 liter (0.62 US qt, 0.52 Imp qt)	–
	At disassembly	0.67 liter (0.71 US qt, 0.59 Imp qt)	–
Recommended engine oil		Pro Honda GN4 4-stroke oil (U.S.A. and Canada) or equivalent motor oil API service classification: SG or Higher JASO T 903 standard: MA Viscosity: SAE 10W-30	–
Recommended transmission oil		Pro Honda GN4 4-stroke oil (U.S.A. and Canada) or equivalent motor oil API service classification: SG or Higher JASO T 903 standard: MA Viscosity: SAE 10W-30	–
Oil pump	Tip clearance	0.15 (0.006)	0.20 (0.008)
	Body clearance	0.15 – 0.21 (0.006 – 0.008)	–
	Side clearance	0.15 – 0.23 (0.006 – 0.010)	–

TROUBLESHOOTING

Engine oil level too low, high oil consumption
- Engine oil not changed often enough
- External oil leaks
- Worn piston rings or incorrect piston ring installation
- Worn valve guide or stem seal

Engine oil contamination
- Engine oil or filter not changed often enough
- Worn piston rings or incorrect piston ring installation
- Worn valve guide or stem seal
- From coolant mixing with oil
  - Faulty head gasket
  - Water leak in crankcase

OIL STRAINER SCREEN

REMOVAL/INSPECTION

Remove the left crankcase cover (page 12-4).

Remove the oil strainer screen.

Clean the oil strainer screen with non-flammable or high flash point solvent and wipe it dry.

Check the oil strainer screen for damage or clogs.

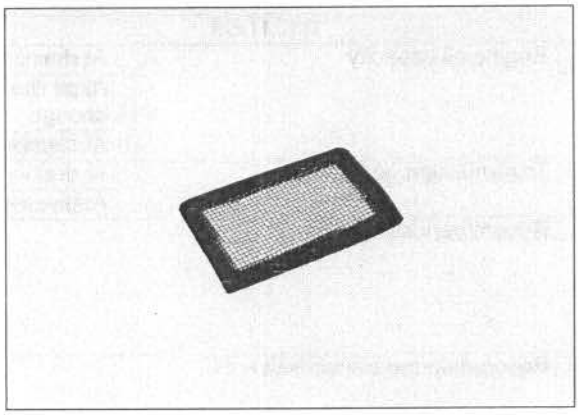

INSTALLATION

Install the oil strainer screen to the crankcase as shown.

Install the left crankcase cover (page 12-8).

Fill the engine with the recommended oil (page 4-15).

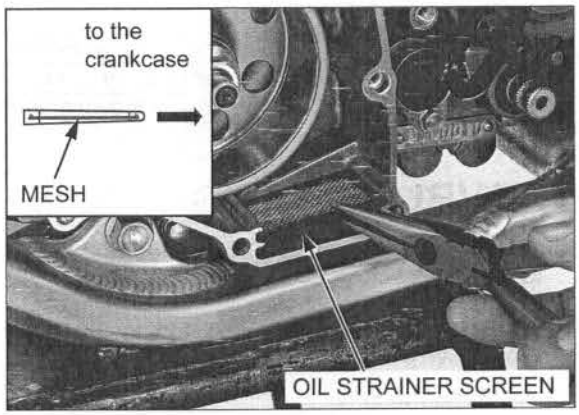

PRESSURE RELIEF VALVE

REMOVAL/INSPECTION

Remove the left crankcase cover (page 12-4).

Remove the snap ring and pressure relief valve from the left crankcase cover.

Remove the O-ring.
Check the pressure relief valve for damage or clogs.

Replace the pressure relief valve if necessary.

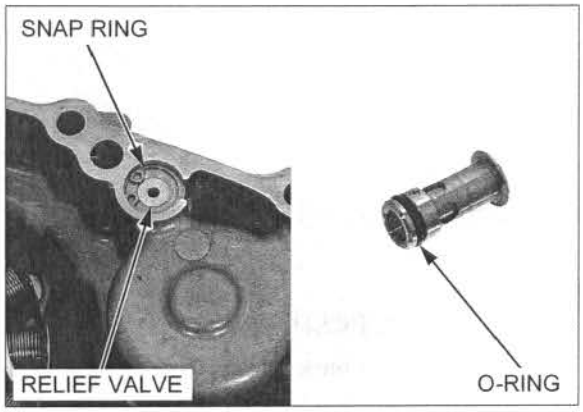

INSTALLATION

Apply engine oil to a new O-ring, and install it to the pressure relief valve.

Install the pressure relief valve into the left crankcase cover.
Install the snap ring securely.

Install the left crankcase cover (page 12-8).

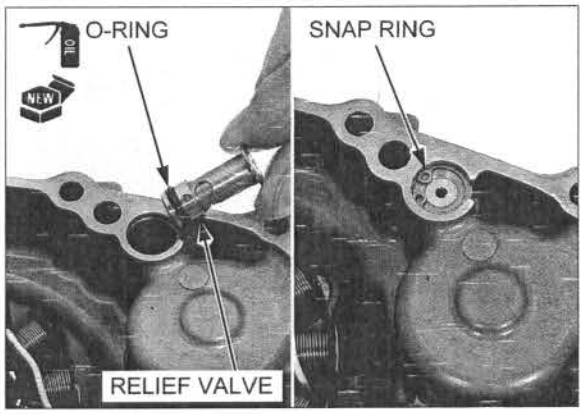

OIL PUMP

DISASSEMBLY

Remove the engine from the frame (page 8-4).

Separate the crankcase halves (page 13-10).

Remove the dowel pins and gasket.
Remove the oil pump inner/outer rotors and oil pump shaft from the left crankcase.

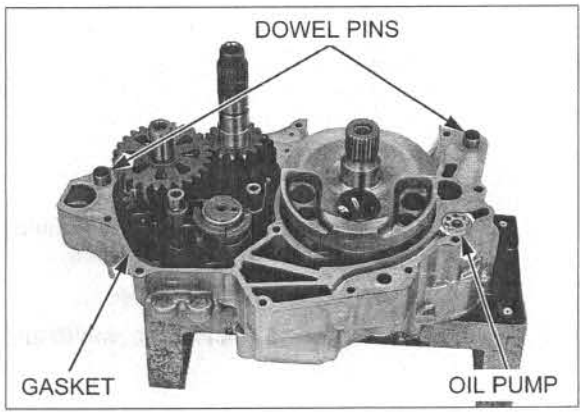

Remove the one-way valve from the right crankcase.

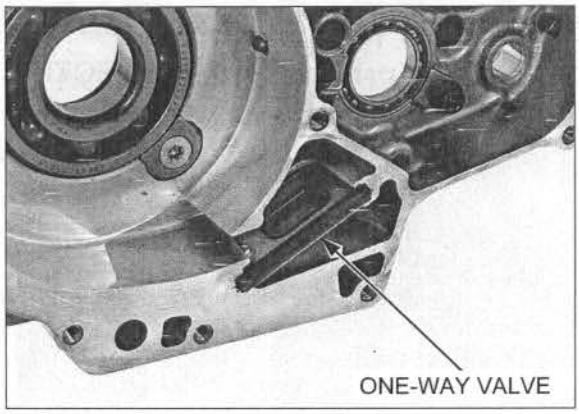

INSPECTION

Check the one-way valve for wear or damage.

Check the oil pump shaft for wear or damage.

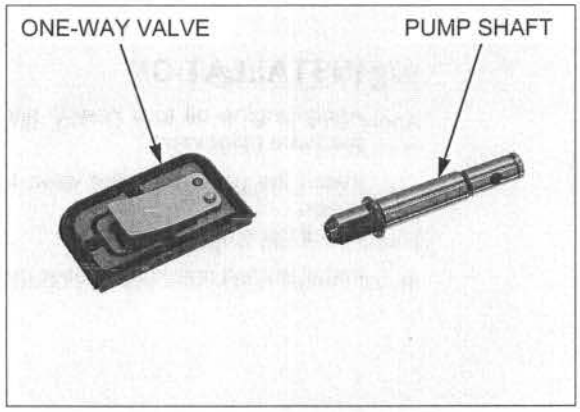

Check the oil seal for damage or deterioration, replace it if necessary.

After installing a snap ring, always rotate it in its groove to be sure it is fully seated.

Check that the washer and snap ring are installed in the left crankcase cover securely.

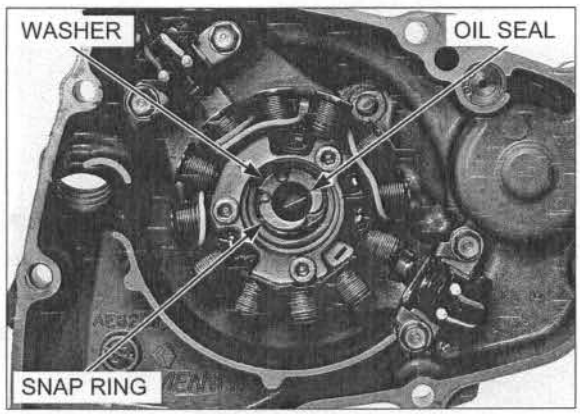

Temporarily install the oil pump shaft and inner/outer rotors into the left crankcase.

Measure the tip clearance.

SERVICE LIMIT: 0.20 mm (0.008 in)

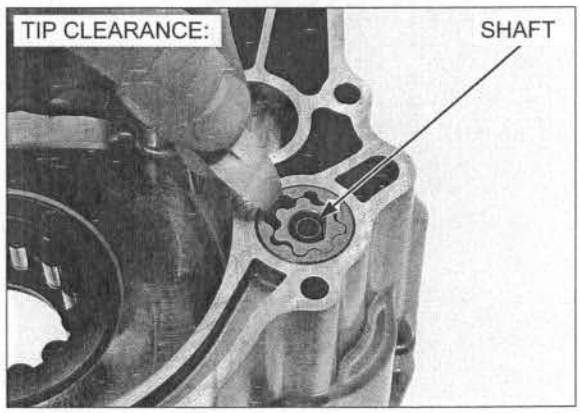

Measure the body clearance.

STANDARD: 0.15 – 0.21 mm (0.006 – 0.008 in)

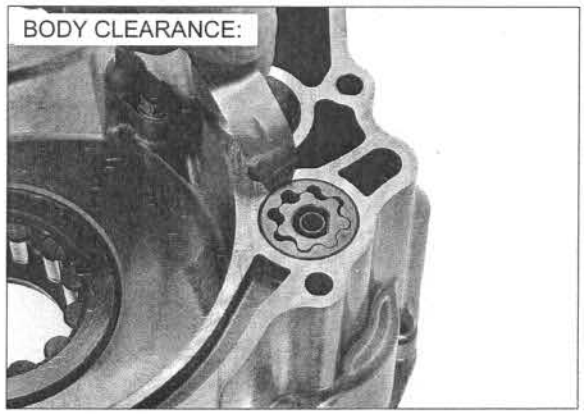

Measure the side clearance with the gasket installed.

Measure the side clearance using a straight edge and feeler gauge.

STANDARD: 0.15 – 0.23 mm (0.006 – 0.010 in)

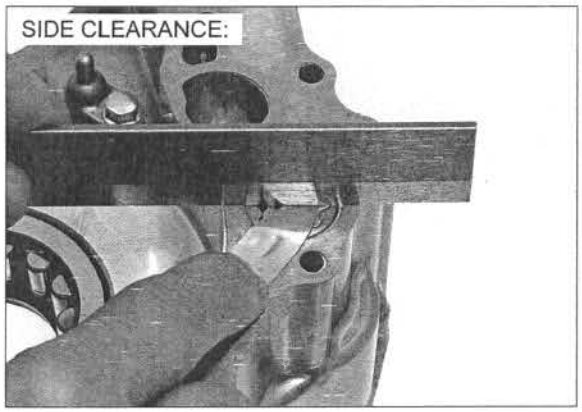

ASSEMBLY

Install the one-way valve onto the right crankcase as shown.

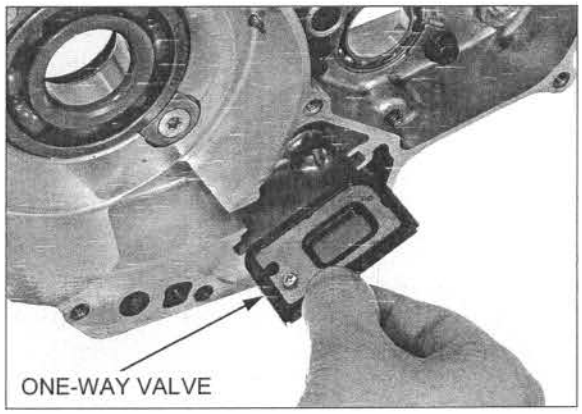

Install the oil pump shaft into the left crankcase.

Apply engine oil to the oil pump rotors sliding area.
Install the oil pump inner rotor while aligning its cut-out with the cut-out of the oil pump shaft.
Install the oil pump outer rotor.

Install the dowel pins and new gasket.

Assemble the crankcase halves (page 13-12).

Install the engine to the frame (page 8-7).

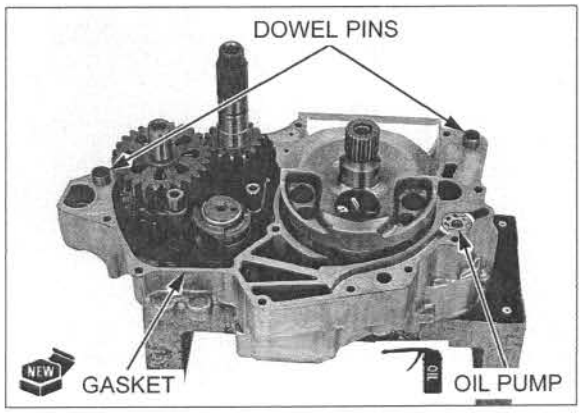

MEMO

6. FUEL SYSTEM (PGM-FI)

6

COMPONENT LOCATION

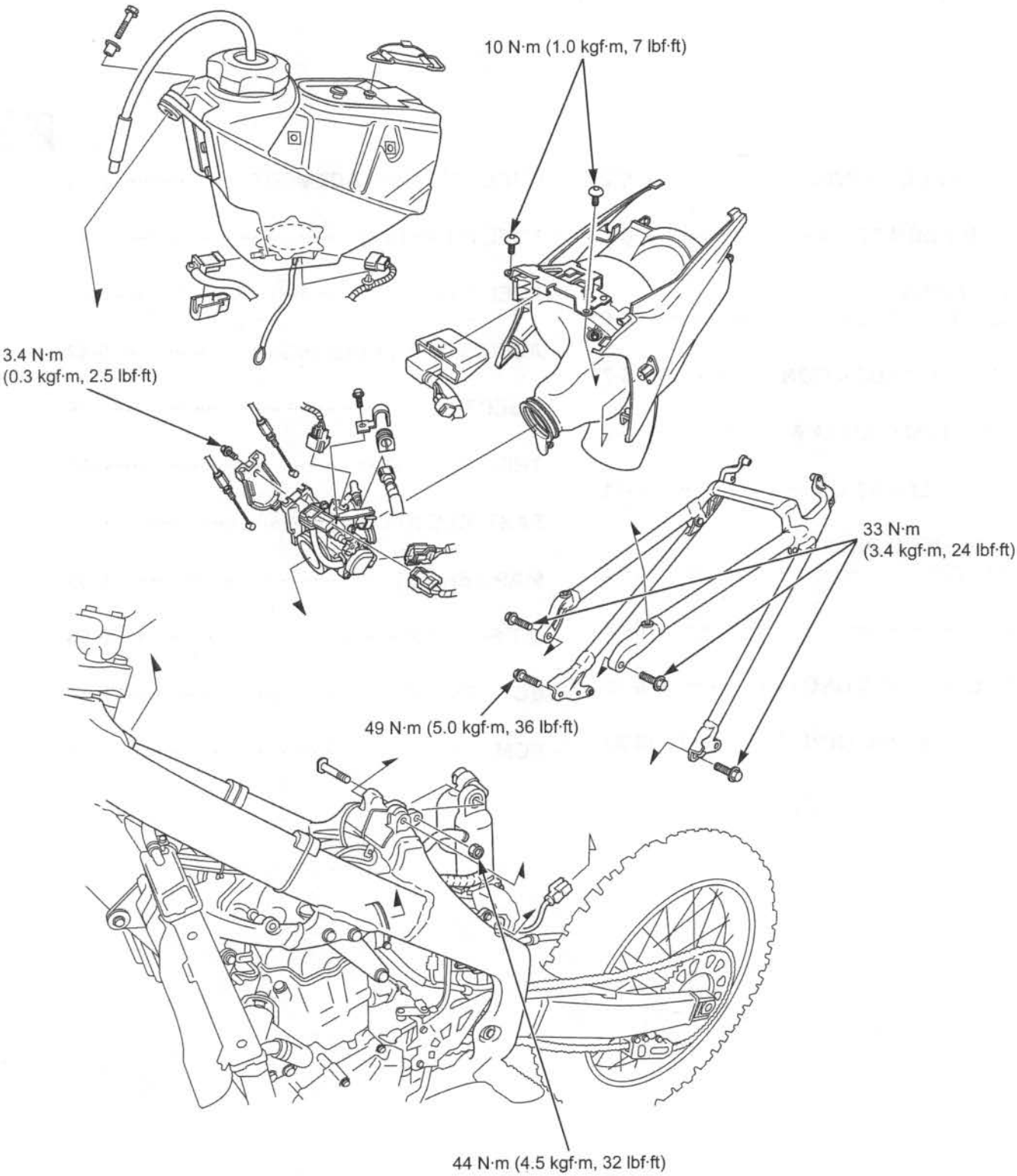

SERVICE INFORMATION

GENERAL

- Be sure to relieve the fuel pressure while the engine is OFF.
- Bending or twisting the control cables will impair smooth operation and could cause the cables to stick or bind, resulting in loss of vehicle control.
- Work in a well ventilated area. Smoking or allowing flames or sparks in the work area or where gasoline is stored can cause a fire or explosion.
- Do not snap the throttle valve from fully opened to fully closed after the throttle cable has been removed. It may cause incorrect idle operation.
- Seal the cylinder head intake ports with tape or a clean cloth to keep dirt and debris from entering the intake ports after the throttle body has been removed.
- Do not damage the throttle body. It may cause incorrect throttle valve operation.
- Prevent dirt and debris from entering the engine, clean the throttle bore and fuel hose with compressed air.
- A faulty PGM-FI system is often related to poorly connected or corroded connectors. Check those connections before proceeding.
- Before disconnecting the fuel hose, relieve fuel pressure from the system by disconnecting the quick connect fitting (page 6-34).
- Do not loosen or tighten the white painted bolts and screws of the throttle body. Loosening or tightening them can cause throttle valve and idle control failure.

SPECIFICATIONS

ITEM		SPECIFICATIONS
Throttle body identification number	'09	GQD0A
	After '09	GQD3A
Idle speed	'09	1,750 ± 100 rpm
	After '09	1,800 ± 100 rpm
Throttle grip freeplay		3 – 5 mm (1/8 – 3/16 in)
ECT sensor resistance (at 20°C/68°F)		2.3 – 2.6 kΩ
Fuel injector resistance (at 20°C/68°F)		11.6 – 12.4 Ω
Fuel pressure		333 – 353 kPa (3.4 – 3.6 kgf/cm^2, 48 – 51 psi)
Fuel pump flow (at 12 V)		50 cm^3 (1.7 US oz, 1.8 Imp oz) minimum/10 seconds

TORQUE VALUES

ECT sensor	12 N·m (1.2 kgf·m, 9 lbf·ft)	
Air cleaner housing mounting bolt	10 N·m (1.0 kgf·m, 7 lbf·ft)	
Air cleaner connecting boot band screw (air cleaner side)	0.7 N·m (0.1 kgf·m, 0.5 lbf·ft)	
Insulator band screw (throttle body side)	See page 6-53	
Fuel pump mounting bolt	11 N·m (1.1 kgf·m, 8 lbf·ft)	For tightening sequence (page 6-44)
Fast idle knob lock nut	2.3 N·m (0.2 kgf·m, 1.7 lbf·ft)	
Mud guard mounting screw	1.1 N·m (0.1 kgf·m, 0.8 lbf·ft)	
Throttle drum cover bolt	3.4 N·m (0.3 kgf·m, 2.5 lbf·ft)	
IAT sensor screw	1.1 N·m (0.1 kgf·m, 0.8 lbf·ft)	
MAP sensor screw	4.9 N·m (0.5 kgf·m, 3.6 lbf·ft)	
Injector joint bolt	5.1 N·m (0.5 kgf·m, 3.8 lbf·ft)	
Clamper stay screw	3.4 N·m (0.3 kgf·m, 2.5 lbf·ft)	
Throttle cable adjuster lock nut	4.0 N·m (0.4 kgf·m, 3.0 lbf·ft)	
Throttle cable bolt	4.0 N·m (0.4 kgf·m, 3.0 lbf·ft)	
Shock absorber upper mounting nut	44 N·m (4.5 kgf·m, 32 lbf·ft)	
Air cleaner housing cover screw	1.1 N·m (0.1 kgf·m, 0.8 lbf·ft)	

TOOLS

Peak voltage adaptor 07HGJ-0020100 (Not available in U.S.A.) 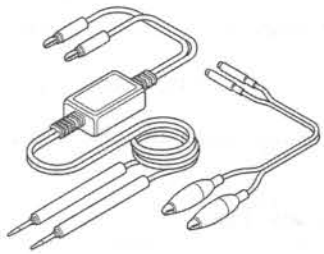 with commercially available digital multimeter (impedance 10 MΩ/DCV minimum)	IgnitionMate peak voltage tester MTP07-0286 (U.S.A. only) 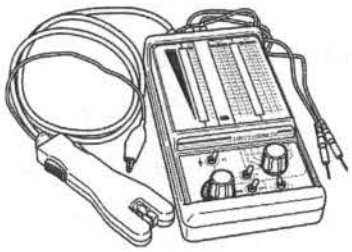	SCS connector 070PZ-ZY30100 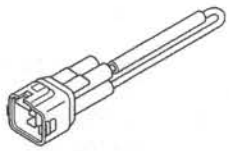
Test probe 07ZAJ-RDJA110 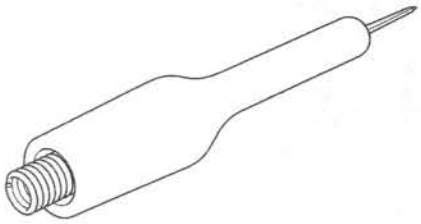	Fuel pressure gauge (0 – 100 psi) 07406-0040004 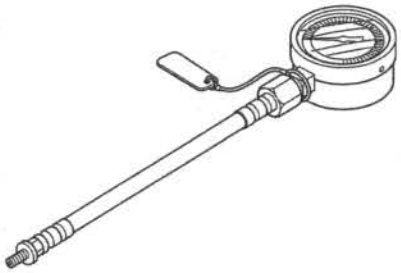 or 07406-004000B (U.S.A. only)	Pressure gauge manifold 07ZAJ-S5A0111 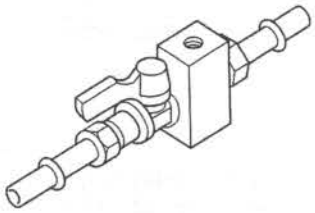 (Not available in U.S.A.)
Hose attachment, 8 mm/9 mm 07ZAJ-S7C0100 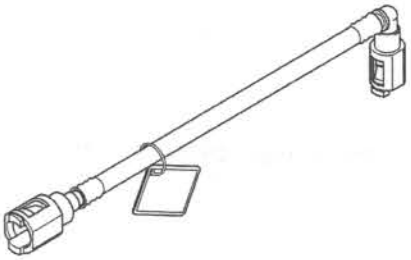 (Not available in U.S.A.)	Hose attachment, 9 mm/9 mm 07ZAJ-S5A0120 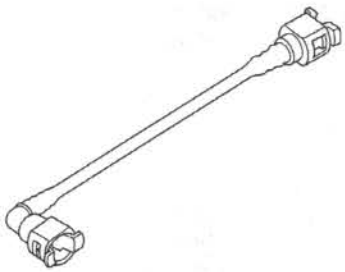 (Not available in U.S.A.)	Attachment joint, 8 mm/9 mm 07ZAJ-S7C0200  (Not available in U.S.A.)
HDS pocket tester TDS3557-0112-01 (U.S.A. only) 	Pressure manifold hose 07AMJ-HW3A100 (U.S.A. only) 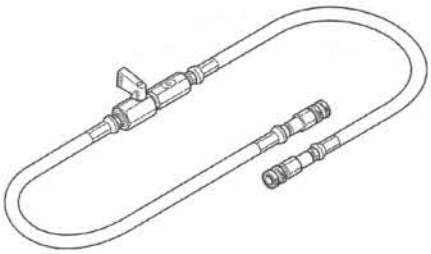	Adaptor, male 07AAJ-S6MA300 (U.S.A. only) 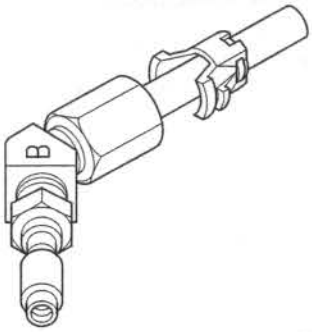

Adaptor, female 07AAJ-S6MA500 (U.S.A. only) 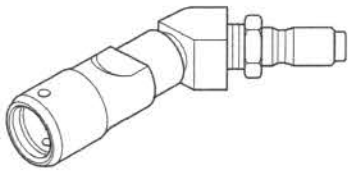	Battery harness 070MZ-MEN0100 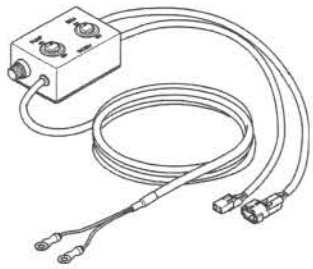 or 070MZ-MENA100 (U.S.A. only)	Battery harness adaptor (After '09) 070MZ-KRN0100 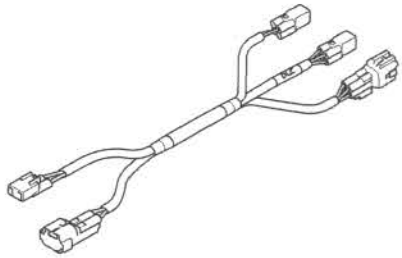 or 070MZ-KRNA100 (U.S.A. only)

PGM-FI SYMPTOM TROUBLESHOOTING

When the motorcycle has one of these symptoms, check the DTC or MIL blinking, refer to the DTC index (page 6-19) and begin the appropriate troubleshooting procedure. If there are no DTC/MIL blinking stored in the ECM memory, do the diagnostic procedure for the symptom, in sequence listed below, until you find the cause.

Symptom	Diagnosis procedure	Also check for
Engine cranks but won't start (No DTC and MIL blinking)	1. Crank the engine for more than 10 seconds and check the DTC (page 6-16) and execute the troubleshooting according to the DTC. 2. Inspect the fuel line (page 4-6). 3. Inspect the ignition system (page 17-6).	• No fuel to injector – Clogged fuel strainer screen – Restricted fuel hose – Restricted fuel tank breather hose – Faulty fuel pump – Faulty fuel pump circuits • Intake air leak • Contaminated/deteriorated fuel • Faulty injector
Engine cranks but won't start (No fuel pump operation sound when the engine is cranking)	1. ECM power/ground circuits malfunction (page 6-58) 2. Inspect the fuel supply system (page 6-34).	Faulty engine stop switch or related circuit
Engine stalls, hard to start, rough idling	1. Inspect the idle speed. 2. Inspect the fast idle knob. 3. Inspect the fuel line (page 4-6). 4. Inspect the regulator/rectifier (page 17-11). 5. Inspect the condenser (page 17-18). 6. Inspect the ignition system (page 17-6).	• Restricted fuel hose • Contaminated/deteriorated fuel • Intake air leak • Restricted fuel tank breather hose
Afterburn when engine braking is used	Inspect the ignition system (page 17-6).	
Backfiring or misfiring during acceleration	Inspect the ignition system (page 17-6).	
Poor performance (driveability) and poor fuel economy	1. Inspect the fuel line (page 4-6). 2. Inspect the air cleaner element (page 4-8). 3. Inspect the ignition system (page 17-6).	• Restricted fuel hose • Restricted fuel tank breather hose • Faulty pressure regulator in the fuel pump • Faulty injector • Faulty MAP sensor • Restricted MAP sensor hose
Idle speed is below specifications or fast idle too low (No DTC and MIL blinking)	1. Inspect the idle speed. 2. Inspect the fuel line (page 4-6). 3. Inspect the ignition system (page 17-6).	• Restricted fuel hose • Restricted fuel tank breather hose • Restricted fast idle knob circuit
Idle speed is above specifications or fast idle too high (No DTC and MIL blinking)	1. Inspect the idle speed. 2. Inspect the throttle operation and freeplay 3. Inspect the air cleaner element (page 4-8). 4. Inspect the fast idle knob (page 6-55).	• Intake air leak • Engine top end problem
MIL never comes ON at all	Inspect the MIL circuit (page 6-33).	
MIL stays ON at all (No DTC set)	1. Inspect the DLC circuit (page 6-33). 2. Inspect the MIL circuit (page 6-33).	

PGM-FI SYSTEM LOCATION

'09:

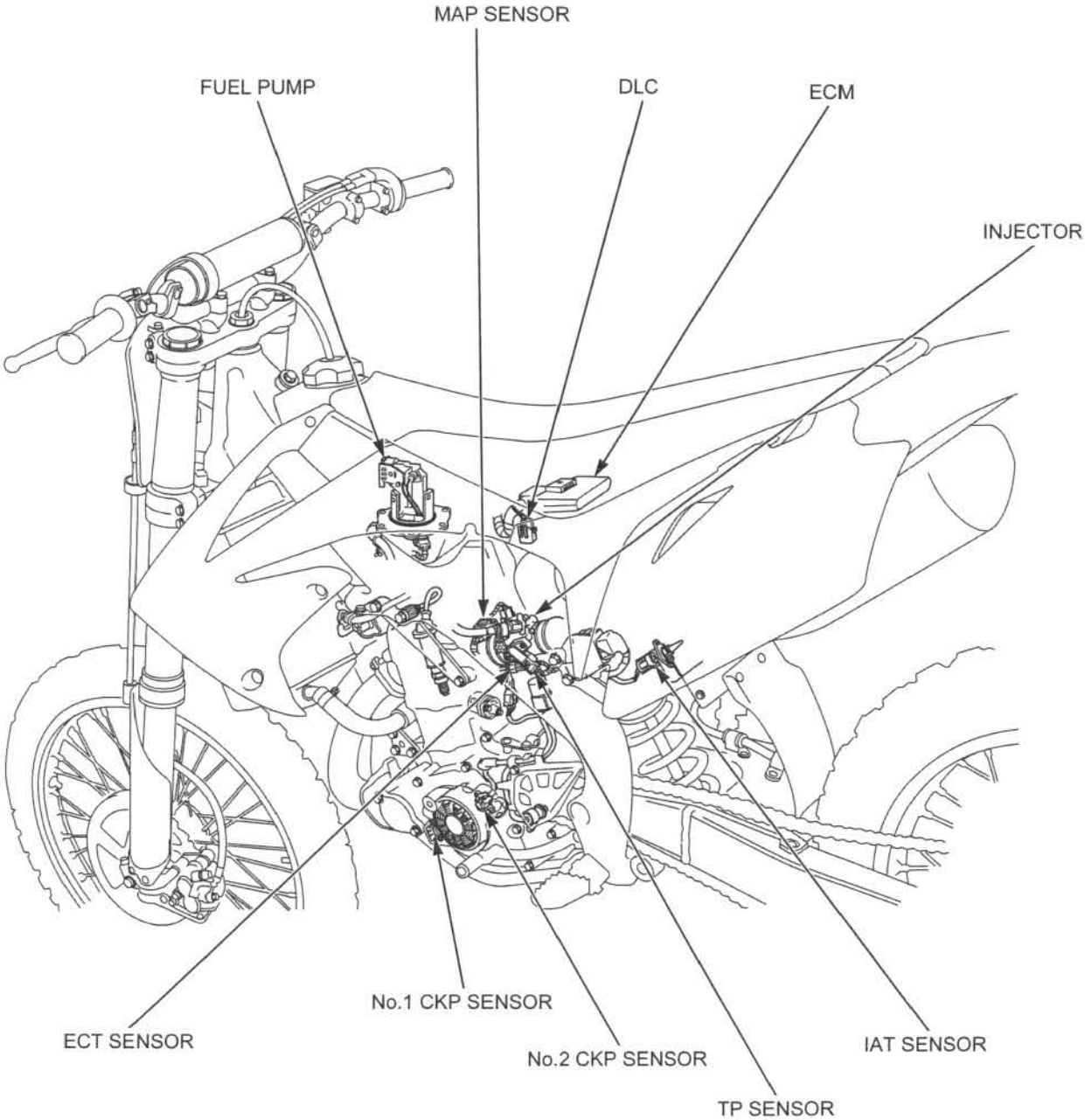

After '09:

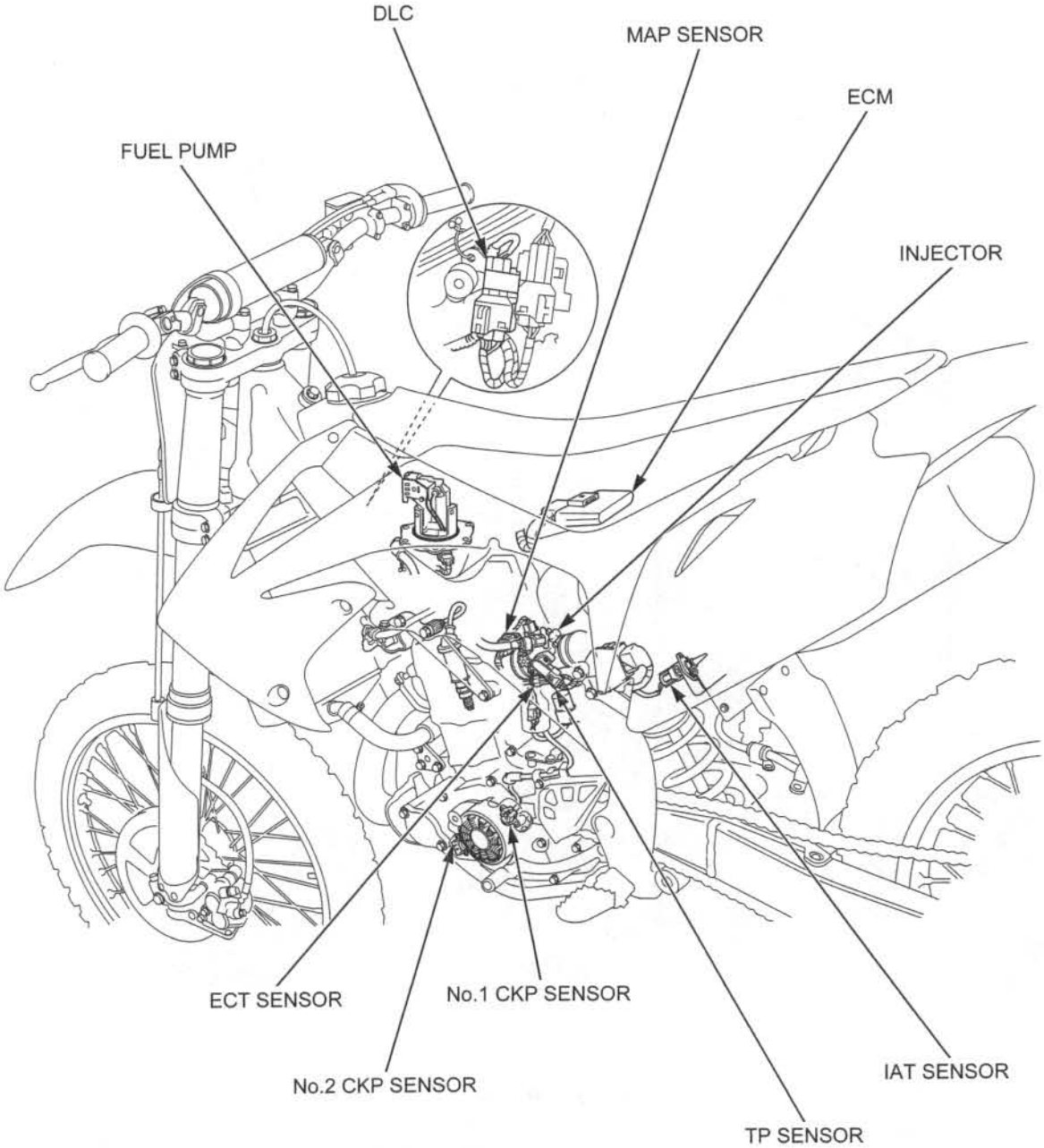
DLC
MAP SENSOR
ECM
FUEL PUMP
INJECTOR
ECT SENSOR
No.1 CKP SENSOR
No.2 CKP SENSOR
IAT SENSOR
TP SENSOR

PGM-FI SYSTEM DIAGRAM

'09:

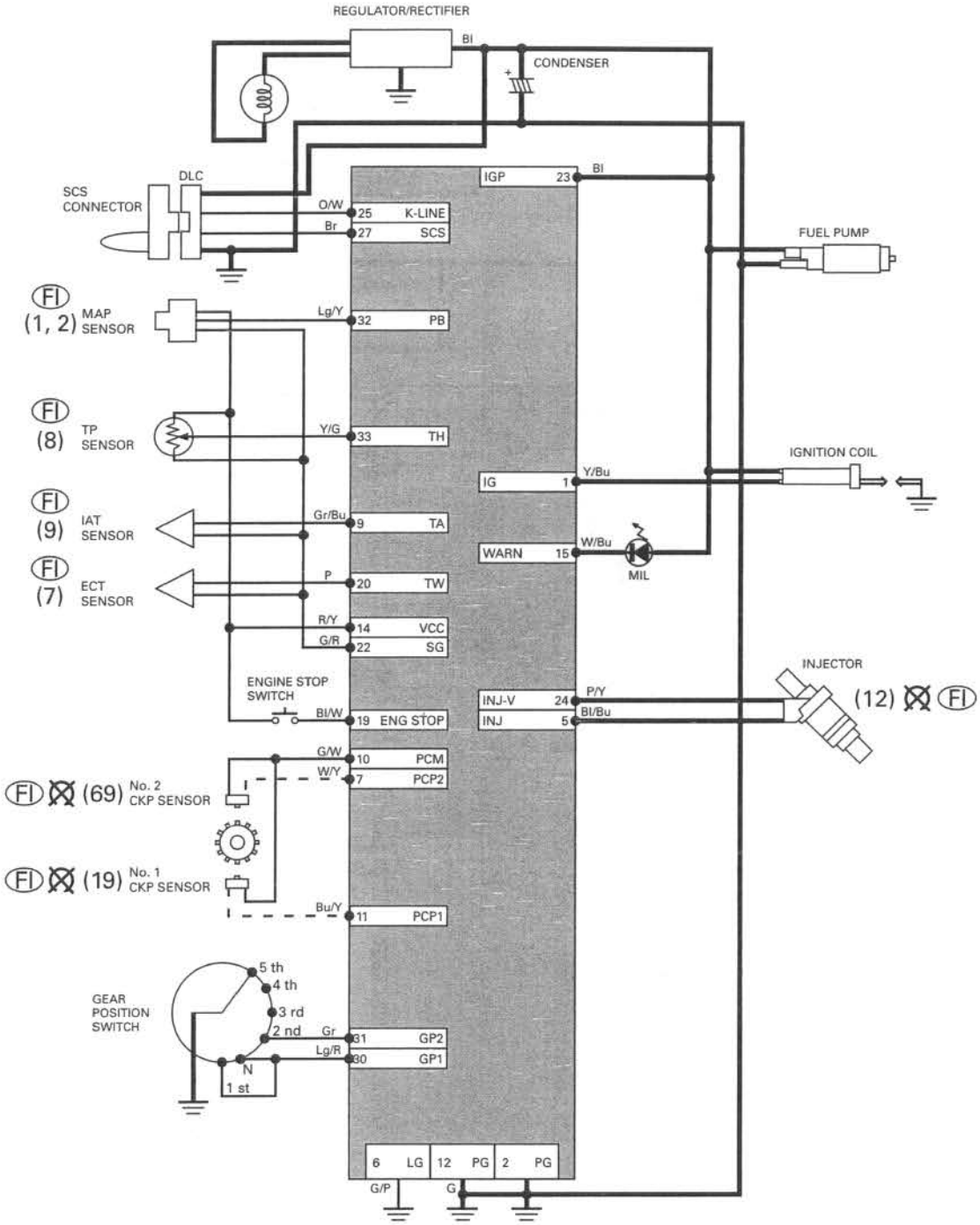

FI ( ):DTC/MIL number

:Engine does not start when detecting DTC / MIL

:Short terminals for reading DTC / MIL

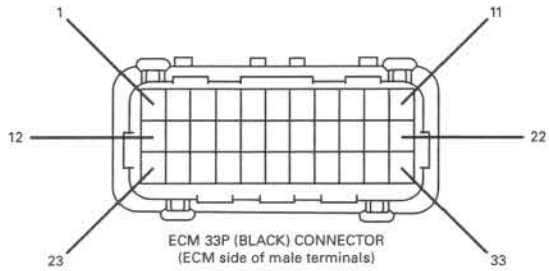

Bl .... Black
Y .... Yellow
Bu .... Blue
G .... Green
R .... Red
W .... White
Br .... Brown
O .... Orange
Lg .... Light green
P .... Pink
Gr .... Gray

After '09:

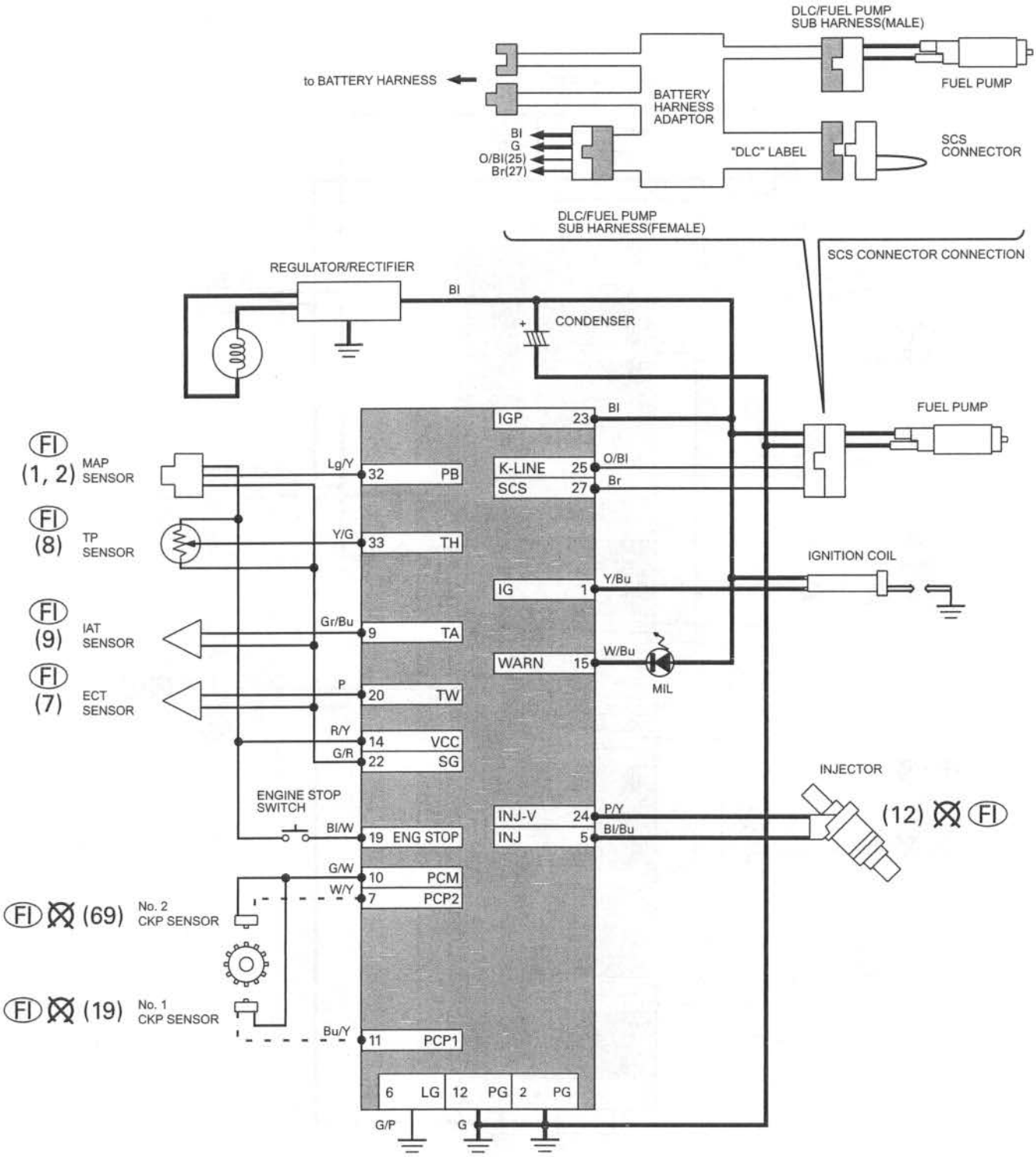

FI ( ):DTC/MIL number

:Engine does not start when detecting DTC / MIL

:Short terminals for reading DTC / MIL

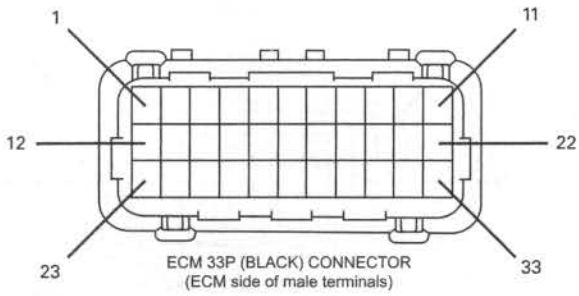

Bl .... Black	Br .... Brown
Y .... Yellow	O .... Orange
Bu .... Blue	Lg .... Light green
G .... Green	P .... Pink
R .... Red	Gr .... Gray
W .... White	

CONNECTOR LOCATION

'09:

NOTE 1: Remove the seat (page 3-3).

NOTE 2: Remove the left radiator shroud (page 3-4).

NOTE 3: Remove the left side cover (page 3-3).

NOTE 4: Remove the sub-frame (page 3-6).

NOTE 5: Hang the fuel tank to the left side of the frame (page 4-6).

NOTE 6: Remove the right radiator shroud (page 3-4).

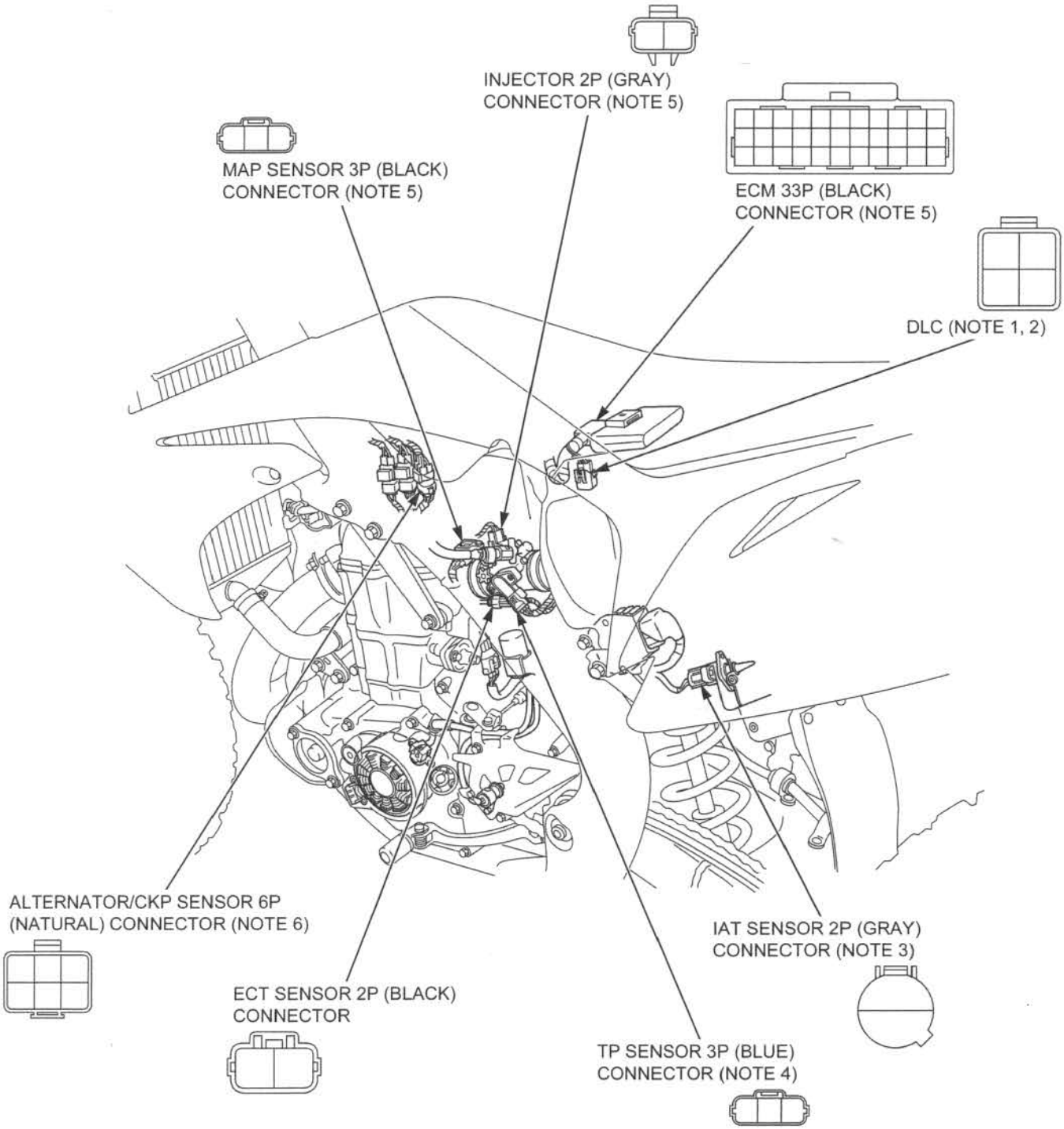

After '09:

NOTE 1: Remove the left side cover (page 3-3).

NOTE 2: Remove the sub-frame (page 3-6).

NOTE 3: Hang the fuel tank to the left side of the frame (page 4-6).

NOTE 4: Remove the right radiator shroud (page 3-4).

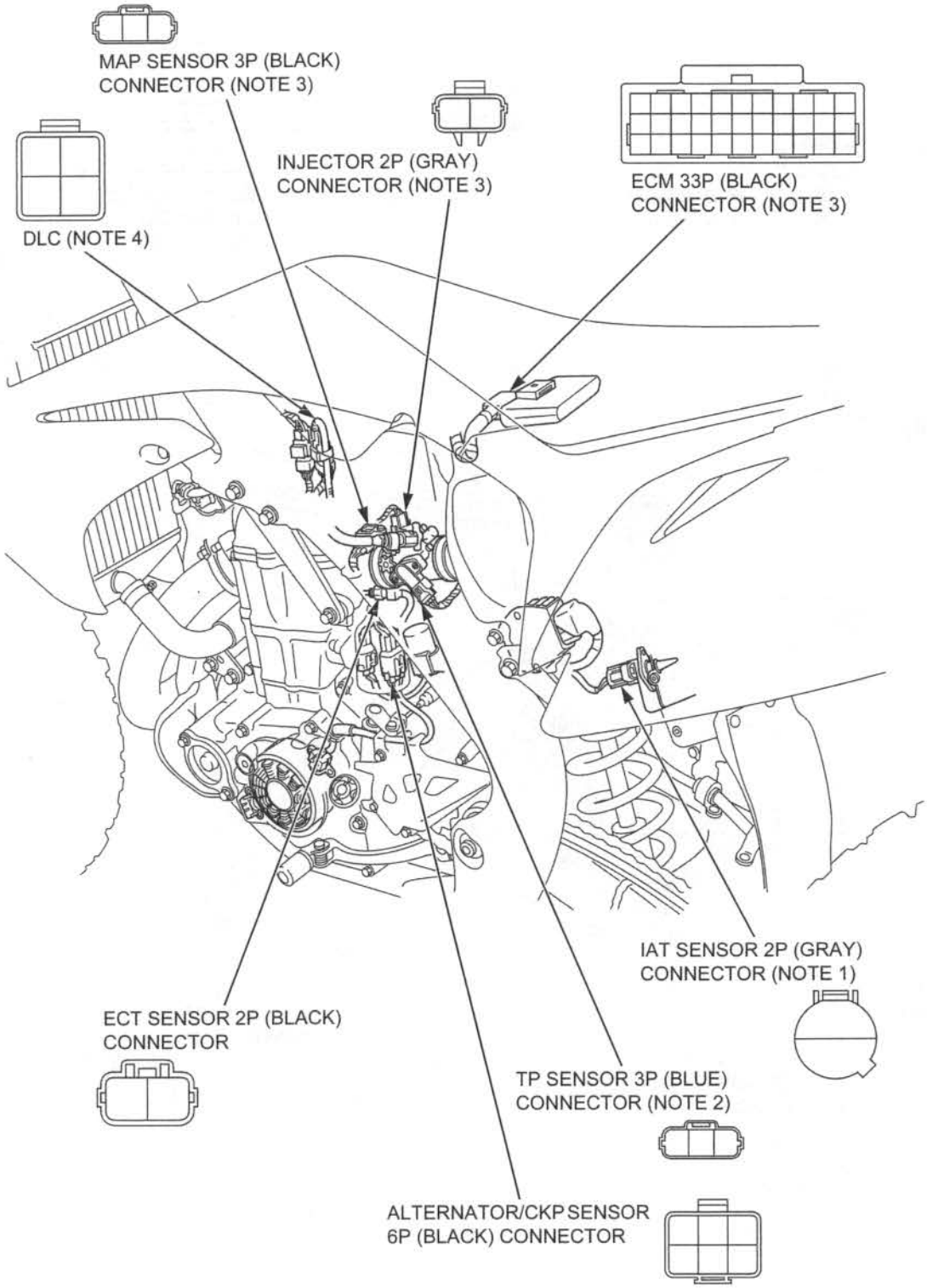

PGM-FI TROUBLESHOOTING INFORMATION

GENERAL TROUBLESHOOTING

Intermittent Failure

The term "intermittent failure" means a system may have had a failure, but it checks OK now. If the MIL does not come on, check for poor contact or loose pins at all connectors related to the circuit that of the troubleshooting. If the MIL was on, but then went out, the original problem may be intermittent.

Opens and Shorts

"Opens" and "Shorts" are common electrical terms. An open is a break in a wire or at a connection. A short is an accidental connection of a wire to ground or to another wire. In simple electronics, this usually means something will not work at all. With ECMs this can mean something may work, but not the way it's supposed to.

If the MIL has come on

Refer to DTC READOUT ('09: page 6-16, After '09: page 6-17).

If the MIL did not stay on

If the MIL did not stay on, but there is a driveability problem, do the SYMPTOM TROUBLESHOOTING (page 6-6).

SYSTEM DESCRIPTION

SELF-DIAGNOSIS SYSTEM

The PGM-FI system is equipped with the self-diagnostic system. When any abnormality occurs in the system, the ECM turns on the MIL and stores a DTC in its erasable memory.

FAIL-SAFE FUNCTION

The PGM-FI system is provided with a fail-safe function to secure a minimum running capability even when there is trouble in the system. When any abnormality is detected by the self-diagnosis function, running capability is maintained by pre-programmed values in the simulated program map. When any abnormality is detected in the injector and/or CKP sensor, the fail-safe function stops the engine to protect it from damage.

DTC (Diagnostic Trouble Code)

- The DTC is composed of a main code and a sub code and it is displayed as a hyphenated number when retrieved from the ECM with the HDS pocket tester.
  The digits in front of the hyphen are the main code, they indicate the component of function failure.
  The digits behind the hyphen are the sub code, they detail the specific symptom of the component or function failure.
  For example, in the case of the TP sensor:
  – DTC 08 – 1 = (TP sensor voltage) – (lower than the specified value).
  – DTC 08 – 2 = (TP sensor voltage) – (higher than the specified value).
- The MAP, ECT, TP and IAT sensor diagnosis will be made according to the voltage output of the affected sensor.
  If a failure occurs, the ECM determines the Function Failure, compares the sensor voltage output to the standard value, and then outputs the corresponding DTC to the HDS Pocket Tester.
  For example:
  – If the output voltage line (A) on the MAP sensor is opened, the ECM detects the output voltage is about 5 V, then the DTC 1-2 (MAP sensor circuit high voltage) will be displayed.
  – If the input voltage line (B) on the TP sensor is opened, the ECM detects the output voltage is 0 V, then the DTC 8-1 (TP sensor circuit low voltage) will be displayed.

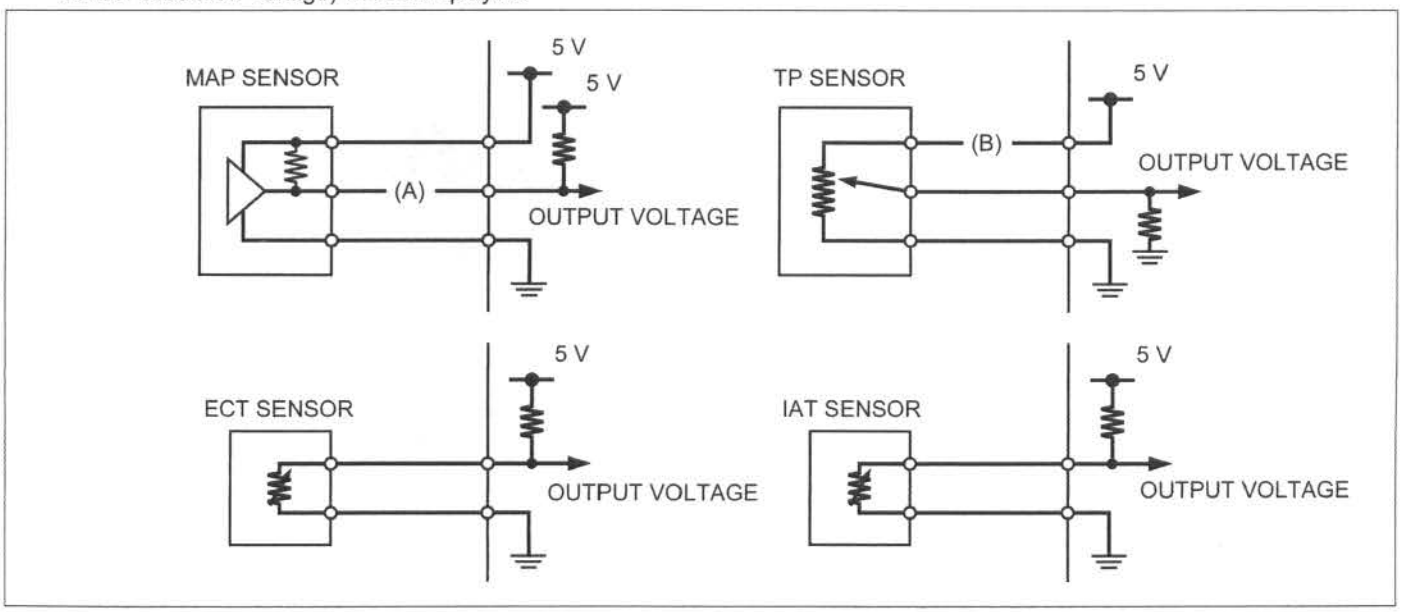

BATTERY HARNESS CONNECTING/OPERATION ('09)

Hang the fuel tank to the left side of the frame (page 4-6).

Disconnect the fuel pump sub harness 2P (Natural) connector.

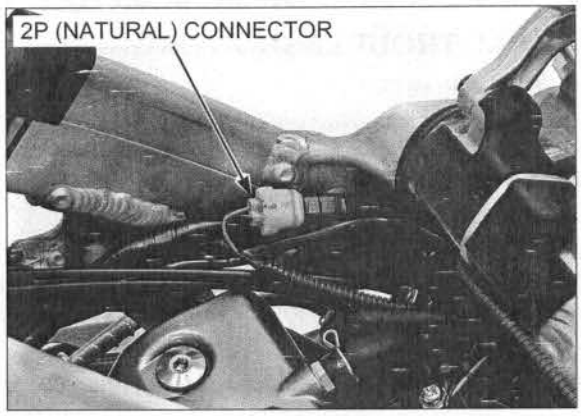

Connect the battery harness to the fuel pump sub harness 2P (Natural) connectors.

TOOL:

Battery harness	**070MZ-MEN0100 or 070MZ-MENA100 (U.S.A. only)**

Connect the battery harness positive (+) cable and battery harness (–) cable to the 12 V battery.

NOTE:

Before connecting the battery harness cables to the 12 V battery, make sure the battery harness selector switches are OFF.

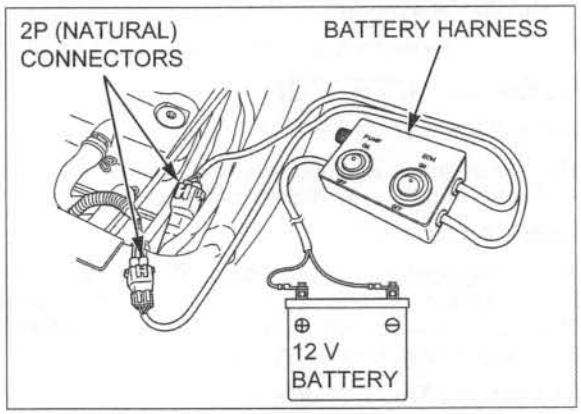

Select the power delivery by operating the selector switches as follows:

- "ECM" selector switch ON: Power to ECM only
- "PUMP" selector switch ON: Power to fuel pump only
- Both selector switches ON: Power to ECM and fuel pump

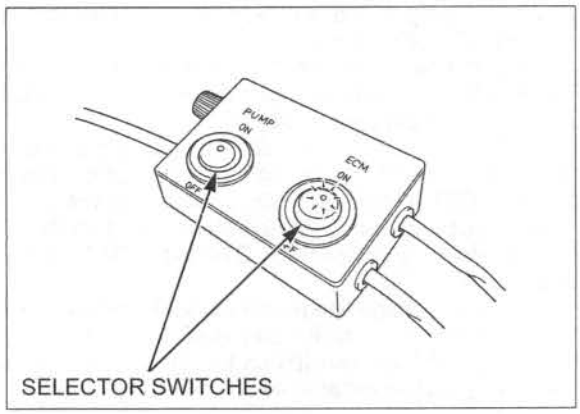

BATTERY HARNESS CONNECTING/OPERATION (After '09)

Remove the right radiator shroud (page 3-4).

Disconnect the DLC/fuel pump sub harness 4P (Red) connector.

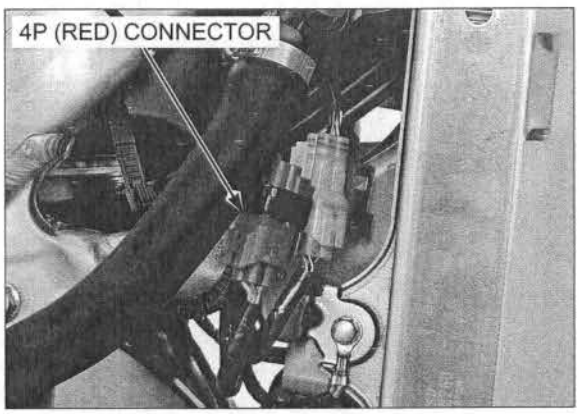

Connect the battery harness adaptor to the DLC/fuel pump sub harness 4P (Red) connector as shown.

TOOL:

Battery harness adaptor	**070MZ-KRN0100 or 070MZ-KRNA100**

Connect the battery harness to the battery harness adaptor as shown.

TOOL:

Battery harness	**070MZ-MEN0100 or 070MZ-MENA100 (U.S.A. only)**

Connect the battery harness positive (+) cable and battery harness (–) cable to the 12 V battery.

NOTE:

Before connecting the battery harness cables to the 12 V battery, make sure the battery harness selector switches are OFF.

Select the power delivery by operating the selector switches as follows:

- "ECM" selector switch ON: Power to ECM only
- "PUMP" selector switch ON: Power to fuel pump only
- Both selector switches ON: Power to ECM and fuel pump

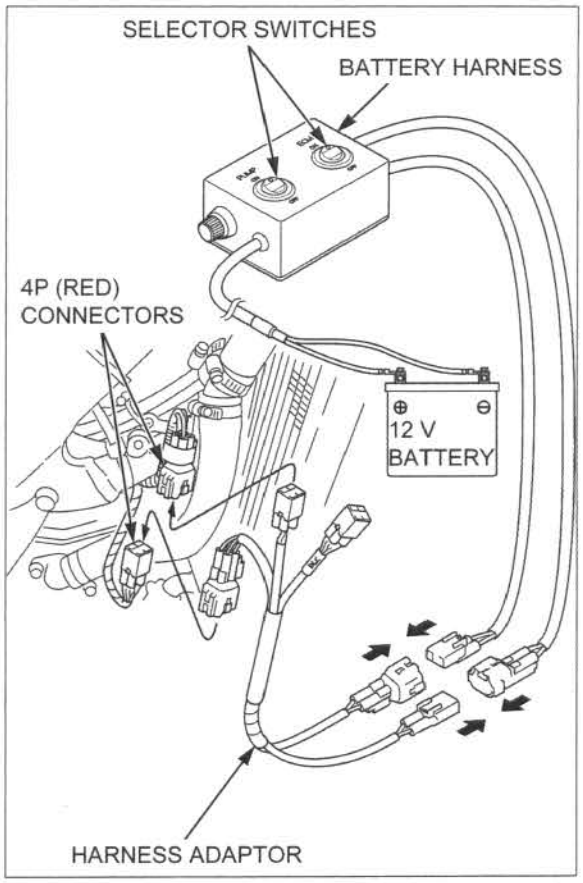

MIL Blink Pattern

- If the HDS pocket tester is not available, DTC can be read from the ECM memory by the MIL blink pattern.
- The number of MIL blinks is the equivalent to the main code of the DTC (the sub code cannot be displayed by the MIL).
- The MIL will blink the current DTC, in case the ECM detects the problem at present, when running the engine or connecting the 12 V battery to the fuel pump sub harness ("ECM" selector switch is ON) (page 6-14). The MIL will stay ON when the engine speed is over 4,000 rpm.
- The MIL has two types of blinks, a long blink and short blink. The long blinking lasts for 1.2 seconds, the short blinking lasts for 0.4 seconds. One long blink is the equivalent of ten short blinks. For example, when two long blinks are followed by five short blinks, the MIL is 25 (two long blinks = 20 blinks, plus five short blinks).
- When the ECM stores more than one DTC, the MIL will indicate them by blinking in the order from the lowest number to highest number.

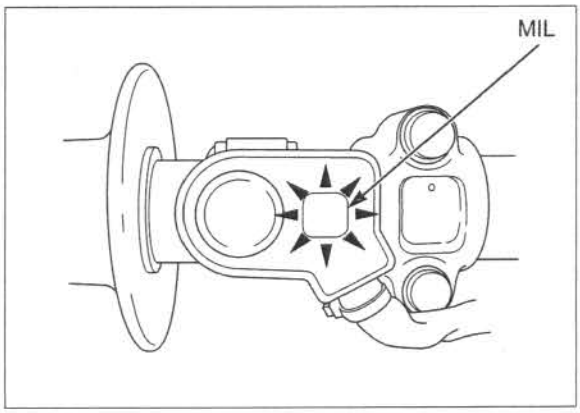

MIL Check

When starting the engine, the MIL will stay on for 2 seconds, then go off. If the MIL does not come on, inspect the MIL circuit (page 6-33).

CURRENT DTC/FREEZE DTC

The DTC is indicated in two ways according to the failure status.

- In the case that the ECM detects a problem at present, the MIL will come on and will start to blink the DTC when running the engine or connecting the 12 V battery to the fuel pump sub harness ("ECM" selector switch is ON) (page 6-14).
- In the case that the ECM does not detect any problem at present but has a problem stored in its memory, the MIL will not light and blink. To retrieve the past problem code, readout the freeze DTC by following the DTC readout procedure.

HDS POCKET TESTER INFORMATION ('09)

- The HDS Pocket Tester can read the DTC, freeze data, current data and other ECM conditions.

How to connect the HDS Pocket Tester

Remove the following:

– Seat (page 3-3)
– Left radiator shroud (page 3-4)

Stop the engine.

Disconnect the DLC and connect the 12 V battery to the fuel pump sub harness ("ECM" selector switch is ON) (page 6-14).

Connect the HDS pocket tester to the DLC.

Check the DTC and freeze data.

NOTE:
Freeze data indicates the engine conditions when the first malfunction was detected.

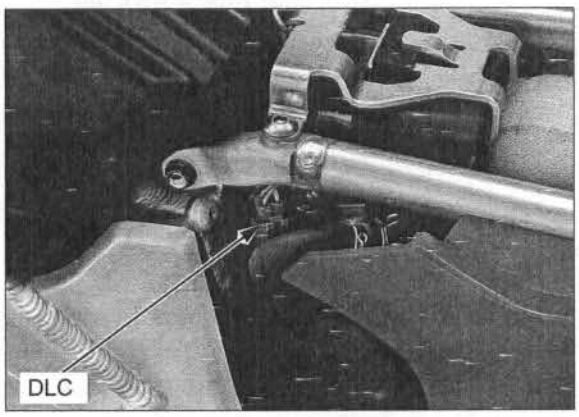

ECM reset

The HDS can reset the ECM data including the DTC, freeze data and some learning memory.

HDS POCKET TESTER INFORMATION (After '09)

- The HDS Pocket Tester can read the DTC, freeze data, current data and other ECM conditions.

How to connect the HDS Pocket Tester

Remove the right radiator shroud (page 3-4).

Stop the engine.

Disconnect the DLC/fuel pump sub harness 4P (Red) connector and connect the 12 V battery ("ECM" selector switch is ON) (page 6-14).

Connect the HDS pocket tester to the battery harness adaptor ("DLC" labeled connector).

Check the DTC and freeze data.

NOTE:
Freeze data indicates the engine conditions when the first malfunction was detected.

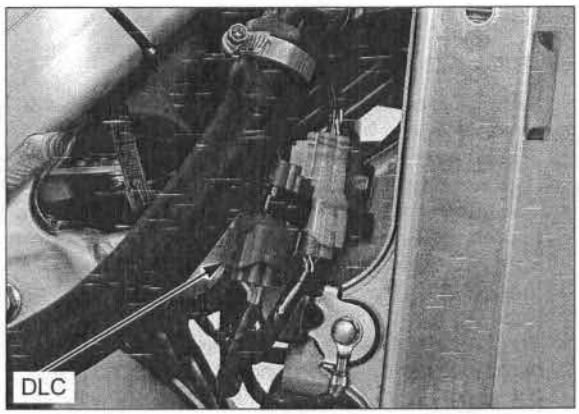

ECM reset

The HDS can reset the ECM data including the DTC, freeze data and some learning memory.

DTC READOUT ('09)

Start the engine and check the MIL.

NOTE:
- When starting the engine, the MIL will stay on for 2 seconds, then go off.
- If the engine can not be started, connect the 12 V battery to the fuel pump sub harness ("ECM" selector switch is ON) (page 6-14).

If the MIL stays on or blinks, connect the HDS Pocket Tester to the DLC (page 6-16), read the DTC, freeze data and follow the troubleshooting index (page 6-19).

To read the DTC with the MIL blinking, refer to "Reading DTC with the MIL" (page 6-17).

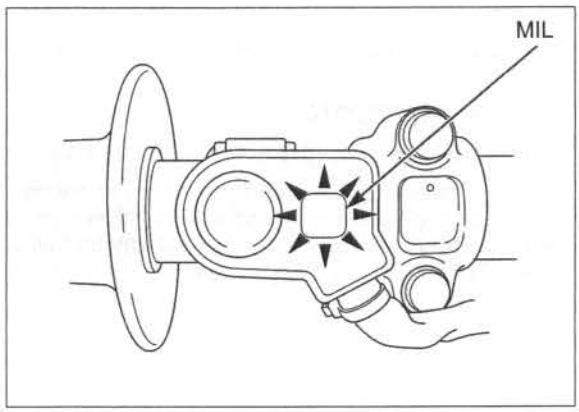

Reading DTC with the MIL

Stop the engine.

Remove the following:

- Seat (page 3-3)
- Left radiator shroud (page 3-4)

Disconnect the DLC connector and short the DLC terminals using the special tool.

TOOL:
SCS connector **070PZ-ZY30100**

Connection: Brown – Green

Connect the 12 V battery to the fuel pump sub harness ("ECM" selector switch is ON) (page 6-14), and note the MIL blinks, and refer to the troubleshooting index (page 6-19).

NOTE:
If the ECM has any DTC in its memory, the MIL will start blinking.

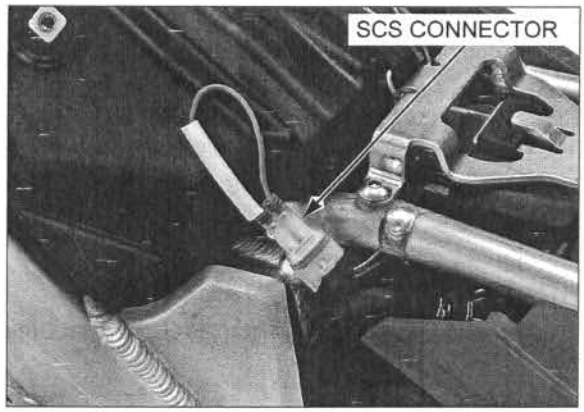

DTC READOUT (After '09)

Start the engine and check the MIL.

NOTE:
- When starting the engine, the MIL will stay on for 2 seconds, then go off.
- If the engine can not be started, connect the 12 V battery ("ECM" selector switch is ON) (page 6-14).

If the MIL stays on or blinks, connect the HDS Pocket Tester to the DLC (page 6-16), read the DTC, freeze data and follow the troubleshooting index (page 6-19).

To read the DTC with the MIL blinking, refer to "Reading DTC with the MIL" (page 6-17).

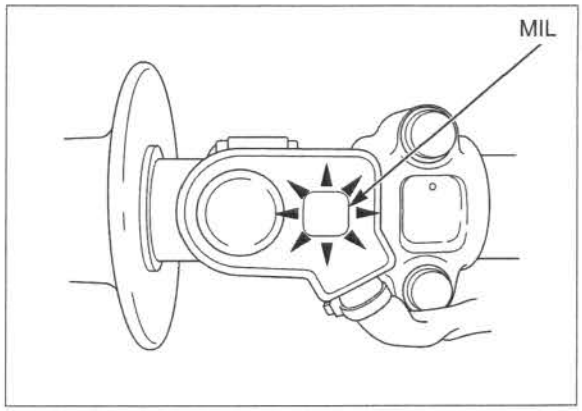

Reading DTC with the MIL

Stop the engine.

Remove the right radiator shroud (page 3-4).

Disconnect the DLC/fuel pump sub harness 4P (Red) connector and connect the 12 V battery (page 6-14).

Short the DLC terminals of the battery harness adaptor ("DLC" labeled connector) using the special tool.

TOOL:
SCS connector **070PZ-ZY30100**

Connection: Brown – Green

"ECM" selector switch is ON, and note the MIL blinks, and refer to the troubleshooting index (page 6-19).

NOTE:
If the ECM has any DTC in its memory, the MIL will start blinking.

ERASING DTC ('09)

NOTE:
Start the erasing procedure with the engine stopped.

Connect the HDS Pocket Tester to the DLC (page 6-16).
Erase the DTC with the HDS.
To erase the DTC without HDS, use to the following procedure.

How to clear the DTC with SCS connector

1. Remove the following:

- Seat (page 3-3)
- Left radiator shroud (page 3-4)

2. Disconnect the DLC and short the Brown and Green wire terminals using the special tool.

   TOOL:
   SCS connector **070PZ-ZY30100**

   Connection: Brown – Green

3. Connect the 12 V battery to the fuel pump sub harness ("ECM" selector switch is ON) (page 6-14).
4. Remove the special tool from the DLC.
5. The MIL will light for approximately 5 seconds. While the MIL lights, short the DLC terminals again with the special tool. The self-diagnostic memory is erased if the MIL goes off and starts blinking.

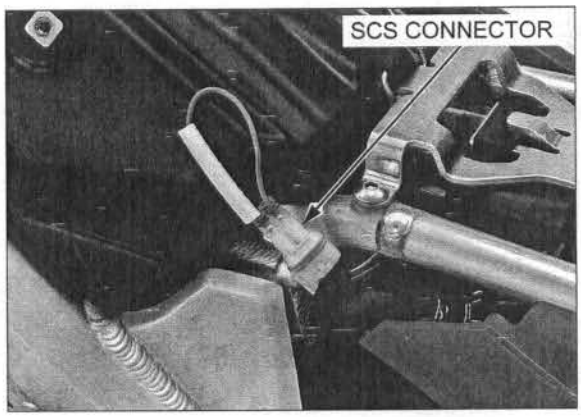

NOTE:
- The DLC must be jumped while the MIL is illuminated. If not, the MIL will not start blinking.
- Note that the self-diagnostic memory cannot be erased if the engine stop switch is pushed or 12 V battery is disconnected before the MIL starts blinking.

ERASING DTC (After '09)

NOTE:
Start the erasing procedure with the engine stopped.

Connect the HDS Pocket Tester to the battery harness adaptor ("DLC" labeled connector).
Erase the DTC with the HDS.
To erase the DTC without HDS, use to the following procedure.

How to clear the DTC with SCS connector

1. Remove the right radiator shroud (page 3-4).
2. Disconnect the DLC/fuel pump sub harness 4P (Red) connector and connect the 12 V battery (page 6-14).

   Short the DLC terminals of the battery harness adaptor ("DLC" labeled connector) using the special tool.

   Connection: Brown – Green

   TOOL:
   SCS connector **070PZ-ZY30100**

3. "ECM" selector switch is on.
4. Remove the special tool from the "DLC" labeled connector.
5. The MIL will light for approximately 5 seconds. While the MIL lights, short the DLC terminals again with the special tool. The self-diagnostic memory is erased if the MIL goes off and starts blinking.

NOTE:
- The DLC must be jumped while the MIL is illuminated. If not, the MIL will not start blinking.
- Note that the self-diagnostic memory cannot be erased if the engine stop switch is pushed or 12 V battery is disconnected before the MIL starts blinking.

CIRCUIT INSPECTION

INSPECTION AT ECM CONNECTOR

- Always clean around and keep any foreign material away from the ECM connector before disconnecting it.
- A faulty PGM-FI system is often related to poorly connected or corroded connections. Check all related connections before proceeding.
- In testing at ECM connector (wire harness side) terminal, always use the test probe. Insert the test probe into the connector terminal, then attach the digital multimeter probe to the test probe.

TOOL:
Test probe **07ZAJ-RDJA110**

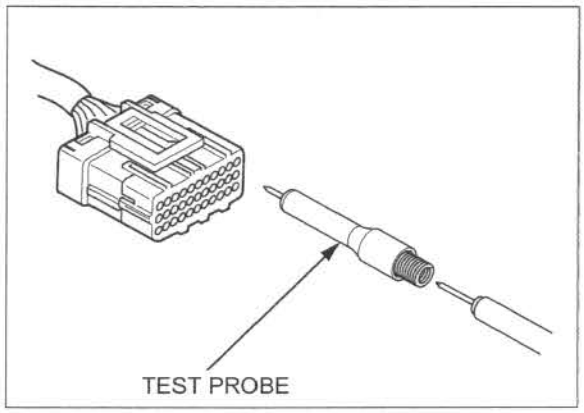

DTC INDEX

DTC (MIL blinks)	Function Failure	Symptom/Fail-safe function	Refer to (DTC)
1-1 (1)	MAP sensor circuit low voltage (less than 0.2 V) • MAP sensor or its circuit malfunction	• Poor performance (driveability) • Pre-programmed value: 68.04 kPa (510.73 mmHg)	6-20
1-2 (1)	MAP sensor circuit high voltage (more than 3.9 V) • Loose or poor contact of the MAP sensor connector • MAP sensor or its circuit malfunction	• Poor performance (driveability) • Pre-programmed value: 68.04 kPa (510.73 mmHg)	6-21
2-1 (2)	MAP sensor performance problem • Loose or poor connection of the MAP sensor vacuum hose • MAP sensor malfunction	• Poor performance (driveability)	6-22
7-1 (7)	ECT sensor circuit low voltage (less than 0.07 V) • ECT sensor or its circuit malfunction	• Hard start at a low temperature • Pre-programmed value: '09: 90°C/194°F After '09: 120°C/248°F • Cooling fan turns on	6-23
7-2 (7)	ECT sensor circuit high voltage (more than 4.93 V) • Loose or poor contact of the ECT sensor connector • ECT sensor or its circuit malfunction	• Hard start at a low temperature • Pre-programmed value: '09: 90°C/194°F After '09: 120°C/248°F • Cooling fan turns on	6-24
8-1 (8)	TP sensor circuit low voltage (less than 0.3 V) • Loose or poor contact of the TP sensor connector • TP sensor or its circuit malfunction	• Poor engine acceleration • Pre-programmed value: 0°	6-25
8-2 (8)	TP sensor circuit high voltage (more than 4.93 V) • TP sensor or its circuit malfunction	• Poor engine acceleration • Pre-programmed value: 0°	6-26
9-1 (9)	IAT sensor circuit low voltage (less than 0.07 V) • IAT sensor or its circuit malfunction	• Engine operates normally • Pre-programmed value: '09: 34.8°C/95°F After '09: –5°C/23°F	6-27
9-2 (9)	IAT sensor circuit high voltage (more than 4.93 V) • Loose or poor contact of the IAT sensor connector • IAT sensor or its circuit malfunction	• Engine operates normally • Pre-programmed value: '09: 34.8°C/95°F After '09: –5°C/23°F	6-28
12-1 (12)	Injector circuit malfunction • Loose or poor contact of the injector connector • Injector or its circuit malfunction	• Engine does not start • Injectors, fuel pump and ignition shut down	6-29
19-1 (19)	No.1 CKP sensor no signal • Loose or poor contact of the CKP sensor connector • CKP sensor or its circuit malfunction	• Engine does not start • Injectors, fuel pump and ignition shut down	6-31
33-2 (–)	ECM EEPROM malfunction	• Engine operates normally	6-32
69-1 (69)	No. 2 CKP sensor no signal • Loose or poor contact of the CKP sensor connector • CKP sensor or its circuit malfunction	• Engine does not start • Injectors, fuel pump and ignition shut down	6-32

DTC TROUBLESHOOTING

DTC 1-1 (MAP SENSOR LOW VOLTAGE)

1. **MAP Sensor System Inspection**

   Connect the 12 V battery ("ECM" selector switch is ON).

   – '09: page 6-14
   – After '09: page 6-14

   Check the MAP sensor with the HDS.

   Is about 0 V indicated?

   YES – GO TO STEP 2.

   NO – Intermittent failure

2. **MAP Sensor Input Voltage Inspection**

   Turn the "ECM" selector switch OFF.
   Disconnect the MAP sensor 3P (Black) connector.

   Turn the "ECM" selector switch ON.
   Measure the voltage at the wire side.

   Connection: Red/yellow (+) – Green/red (–)

   Is the voltage within 4.75 – 5.25 V?

   YES – GO TO STEP 4.

   NO – GO TO STEP 3.

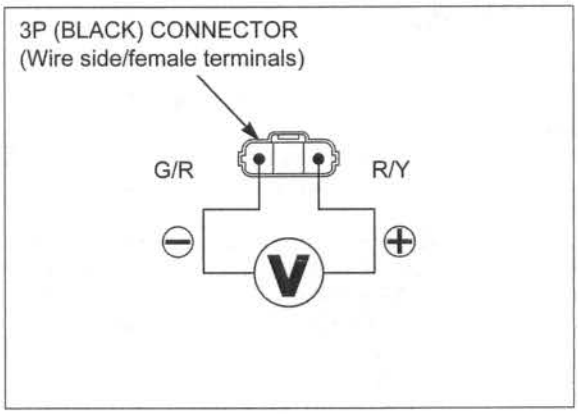

3. **MAP Sensor Input Line Inspection**

   Turn the "ECM" selector switch OFF.
   Disconnect the ECM 33P (Black) connector.

   Check for continuity at the Red/yellow wire between the MAP sensor 3P (Black) connector and ECM 33P (Black) connector.

   Connection: 14 – Red/yellow

   TOOL:
   Test probe **07ZAJ-RDJA110**

   Is there continuity?

   YES – Replace the ECM with a known good one, and recheck.

   NO – Open circuit in Red/yellow wire

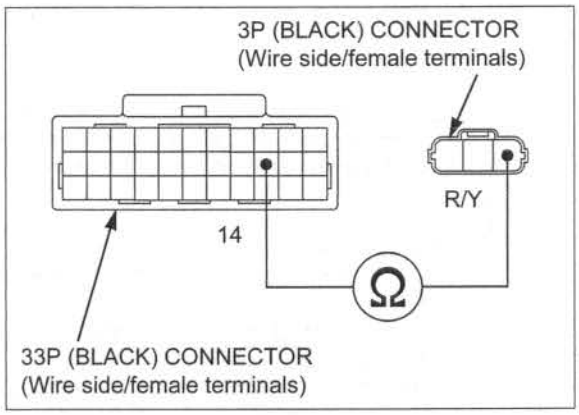

4. **MAP Sensor Output Line Short Circuit Inspection**

   Turn the "ECM" selector switch OFF.

   Check for continuity between the MAP sensor 3P (Black) connector at the wire side and ground.

   Connection: Light green/yellow – Ground

   Is there continuity?

   YES – Short circuit in Light green/yellow wire

   NO – GO TO STEP 5.

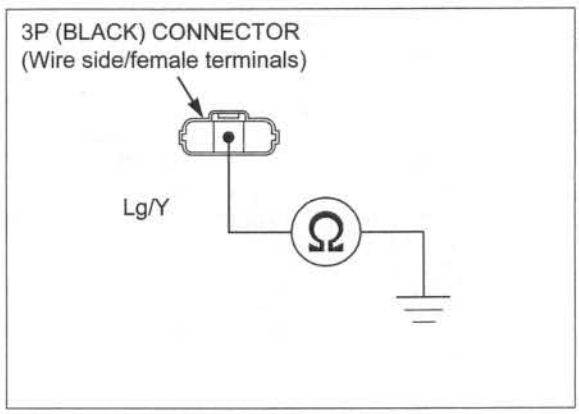

5. **MAP Sensor Inspection**

   Connect the ECM 33P (Black) connector.
   Replace the MAP sensor with a known good one (page 6-56).
   Erase the DTC's (page 6-18).
   Turn the "ECM" selector switch ON.

   Check the MAP sensor with the HDS.

   Is DTC 1-1 indicated?

   YES – Replace the ECM with a known good one, and recheck.

   NO – Faulty original MAP sensor

DTC 1-2 (MAP SENSOR HIGH VOLTAGE)

Before starting the inspection, check for loose or poor contact on the MAP sensor 3P (Black) connector and ECM 33P connector, then recheck the DTC.

1. **MAP Sensor System Inspection 1**

   Connect the 12 V battery ("ECM" selector switch is ON).

   – '09: page 6-14
   – After '09: page 6-14

   Check the MAP sensor with the HDS.

   Is about 5 V indicated?

   YES – GO TO STEP 2.

   NO – Intermittent failure

2. **MAP Sensor System Inspection 2**

   Turn the "ECM" selector switch OFF.

   Disconnect the MAP sensor 3P (Black) connector.
   Connect the MAP sensor 3P (Black) connector terminals at the wire side with a jumper wire.

   Connection: Light green/yellow – Green/red

   Turn the "ECM" selector switch ON.
   Check the MAP sensor with the HDS.

   Is about 0 V indicated?

   YES – Faulty MAP sensor

   NO – GO TO STEP 3.

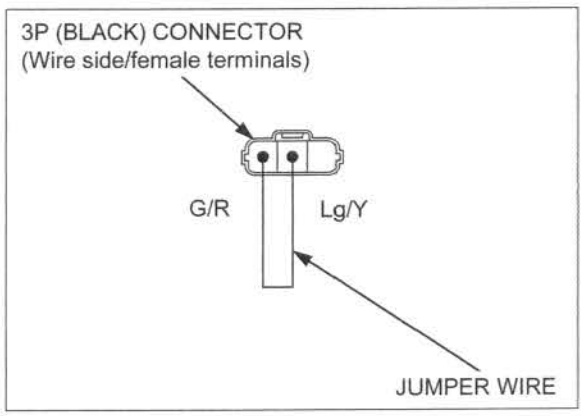

3. **MAP Sensor Input Voltage Inspection**

   Turn the "ECM" selector switch OFF.
   Remove the jumper wire.

   Turn the "ECM" selector switch ON.
   Measure the voltage at the wire side.

   Connection: Red/yellow (+) – Green/red (–)

   Is the voltage within 4.75 – 5.25 V?

   YES – GO TO STEP 4.

   NO – • Open circuit in Red/yellow wire
   • Open circuit in Green/red wire

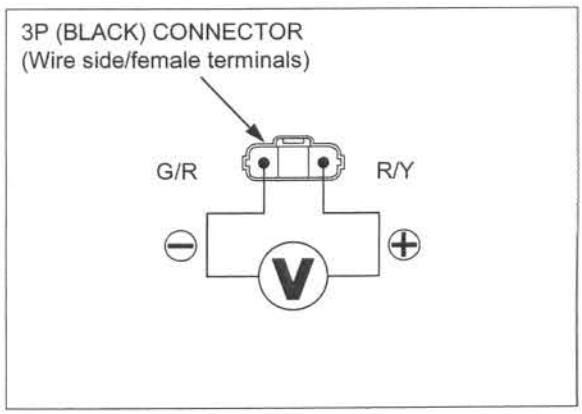

4. **MAP Sensor Output Line Open Circuit Inspection**

Turn the "ECM" selector switch OFF.

Disconnect the ECM 33P (Black) connector.
Check for continuity at the Light green/yellow wire between the MAP sensor 3P (Black) connector and ECM 33P (Black) connector.

Connection: 32 – Light green/yellow

TOOL:
Test probe **07ZAJ-RDJA110**

Is there continuity?

YES – Replace the ECM with a known good one, and recheck.

NO – Open circuit in Light green/yellow wire

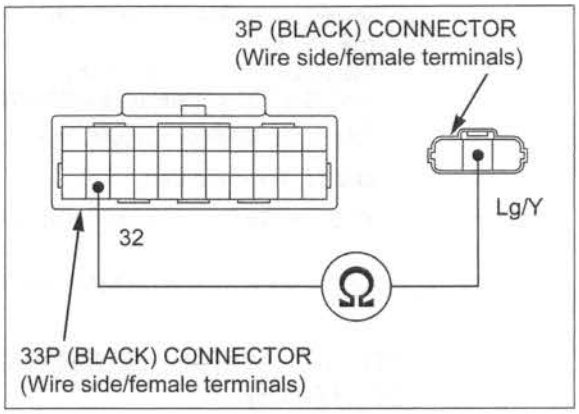

DTC 2-1 (MAP SENSOR)

1. **MAP Sensor System Inspection**

After '09: Connect the battery harness and battery harness adaptor (page 6-14).
Turn the "ECM" and "PUMP" selector switch ON.

Start the engine.

Check the MAP sensor with the HDS at idle speed.

Is the reading changed?

YES – Intermittent failure

NO – GO TO STEP 2.

2. **Manifold Absolute Pressure Test**

Stop the engine.
Hang the fuel tank to the left side of the frame (page 4-6).
Remove the screw and stay.

Check for connection and installation of the MAP sensor vacuum hose.

Is the MAP sensor vacuum hose connection correct?

YES – GO TO STEP 3.

NO – Correct the hose installation.

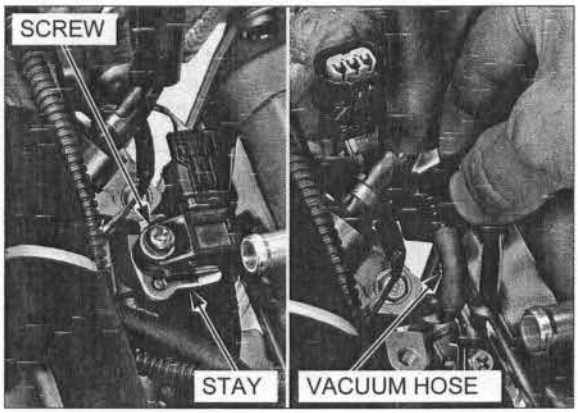

3. **MAP Sensor System Inspection**

Replace the MAP sensor with a known good one (page 6-56).
Start the engine.

Check the MAP sensor with the HDS at idle speed.

Is the reading changed?

YES – Faulty original MAP sensor

NO – Replace the ECM with a known good one, and recheck.

DTC 7-1 (ECT SENSOR LOW VOLTAGE)

1. **ECT Sensor System Inspection**

   Connect the 12 V battery ("ECM" selector switch is ON).

   – '09: page 6-14
   – After '09: page 6-14

   Check the ECT sensor with the HDS.

   Is about 0 V indicated?

   YES – GO TO STEP 2.

   NO – Intermittent failure

2. **ECT Sensor Inspection**

   Turn the "ECM" selector switch OFF.
   Disconnect the ECT sensor 2P (Black) connector.

   Turn the "ECM" selector switch ON.
   Check the ECT sensor with the HDS.

   Is about 0 V indicated?

   YES – GO TO STEP 4.

   NO – GO TO STEP 3.

3. **ECT Sensor Resistance Inspection**

   Turn the "ECM" selector switch OFF.

   Measure the resistance at the ECT sensor terminals.

   Standard: 2.3 – 2.6 kΩ (20°C/68°F)

   Is the resistance within 2.3 – 2.6 kΩ?

   YES – Replace the ECM with a known good one, and recheck.

   NO – Faulty ECT sensor

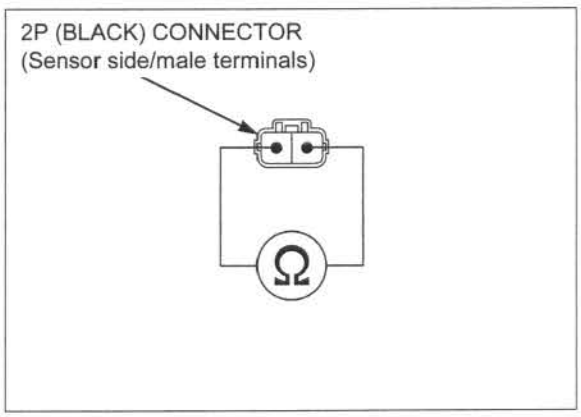

4. **ECT Sensor Output Line Short Circuit Inspection**

   Turn the "ECM" selector switch OFF.
   Check for continuity between the ECT sensor 2P (Black) connector at the wire side and ground.

   Connection: Pink – Ground

   Is there continuity?

   YES – Short circuit in Pink wire

   NO – Replace the ECM with a known good one, and recheck.

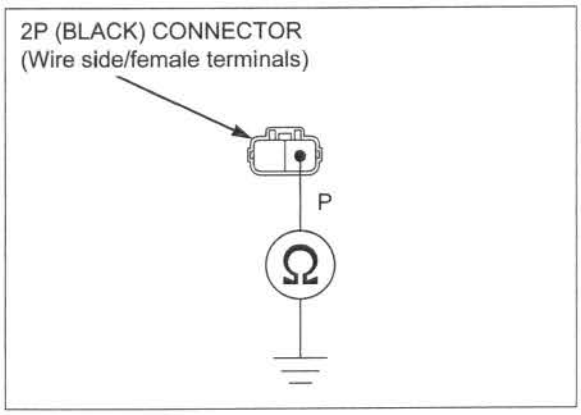

DTC 7-2 (ECT SENSOR HIGH VOLTAGE)

Before starting the inspection, check for loose or poor contact on the ECT sensor 2P (Black) connector and ECM 33P connector, then recheck the DTC.

1. **ECT Sensor System Inspection**

   Connect the 12 V battery ("ECM" selector switch is ON).

   – '09: page 6-14
   – After '09: page 6-14

   Check the ECT sensor with the HDS.

   Is about 5 V indicated?

   YES – GO TO STEP 2.

   NO – Intermittent failure

2. **ECT Sensor Inspection**

   Turn the "ECM" selector switch OFF.

   Disconnect the ECT sensor 2P (Black) connector. Connect the ECT sensor 2P (Black) connector terminals with a jumper wire.

   Connection: Pink – Green/red

   Turn the "ECM" selector switch ON.
   Check the ECT sensor with the HDS.

   Is about 0 V indicated?

   YES – Inspect the ECT sensor (page 6-57).

   NO – GO TO STEP 3.

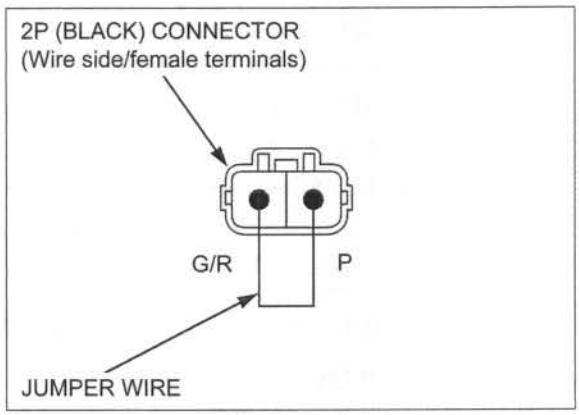

3. **ECT Sensor Open Circuit Inspection**

   Turn the "ECM" selector switch OFF.
   Remove the jumper wire.

   Disconnect the ECM 33P (Black) connector.
   Check for continuity between the ECT sensor 2P (Black) and ECM 33P (Black) connectors.

   Connection: 20 – Pink
   22 – Green/red

   TOOL:
   Test probe **07ZAJ-RDJA110**

   Is there continuity?

   YES – Replace the ECM with a known good one, and recheck.

   NO – • Open circuit in Pink wire
   • Open circuit in Green/red wire

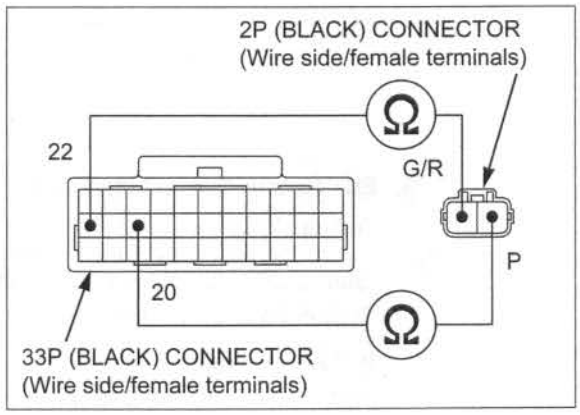

DTC 8-1 (TP SENSOR LOW VOLTAGE)

Before starting the inspection, check for loose or poor contact on the TP sensor 3P (Blue) connector and ECM 33P connector, then recheck the DTC.

1. **TP Sensor System Inspection**

   Connect the 12 V battery ("ECM" selector switch is ON).

   – '09: page 6-14
   – After '09: page 6-14

   Check the TP sensor with the HDS when the throttle is fully closed.

   Is about 0 V indicated?

   YES – GO TO STEP 3.

   NO – GO TO STEP 2.

2. **TP Sensor Inspection**

   Check that the TP sensor voltage increases continuously when moving the throttle from fully closed to fully opened using the data list menu of the HDS.

   Does the voltage increase continuously?

   YES – Intermittent failure

   NO – Faulty TP sensor

3. **TP Sensor Input Voltage Inspection**

   Turn the "ECM" selector switch OFF.
   Disconnect the TP sensor 3P (Blue) connector.

   Turn the "ECM" selector switch ON.
   Measure the voltage at the wire side.

   Connection: Red/yellow (+) – Green/red (–)

   Is the voltage within 4.75 – 5.25 V?

   YES – GO TO STEP 5.

   NO – GO TO STEP 4.

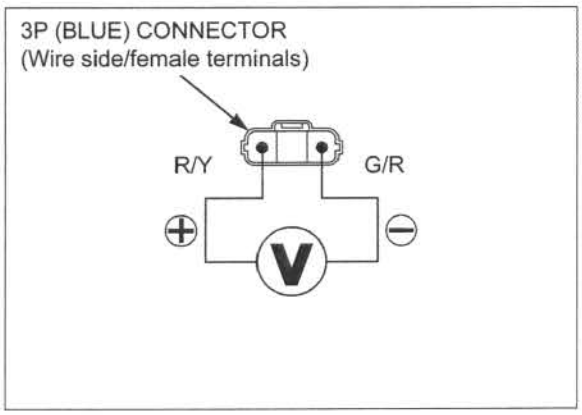

4. **TP Sensor Circuit Inspection**

   Turn the "ECM" selector switch OFF.
   Disconnect the ECM 33P (Black) connector.
   Check for continuity at the Red/yellow wire between the TP sensor 3P (Blue) connector and ECM 33P (Black) connector.

   Connection: 14 – Red/yellow

   TOOL:
   Test probe **07ZAJ-RDJA110**

   Is there continuity?

   YES – Replace the ECM with a known good one, and recheck.

   NO – Open circuit in Red/yellow wire

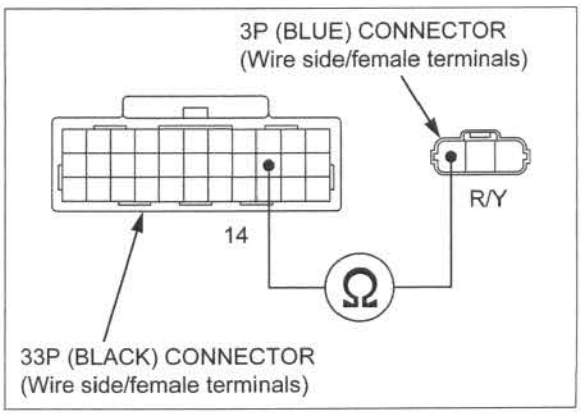

5. **TP Sensor Output Line Open Circuit Inspection**

   Turn the "ECM" selector switch OFF.

   Disconnect the ECM 33P (Black) connector.
   Check for continuity at the Yellow/green wire between the TP sensor 3P (Blue) connector and ECM 33P (Black) connector.

   Connection: 33 – Yellow/green

   TOOL:
   Test probe **07ZAJ-RDJA110**

   Is there continuity?

   YES – GO TO STEP 6.

   NO – Open circuit in Yellow/green wire

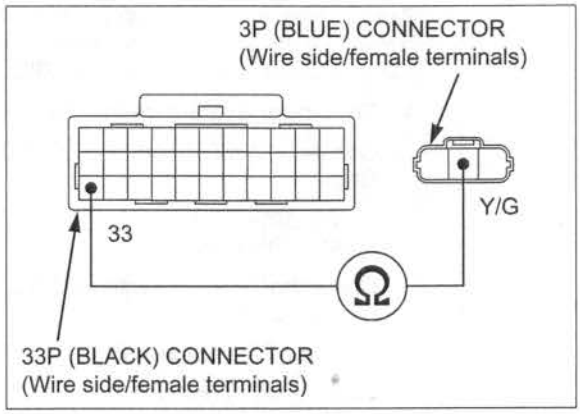

6. **TP Sensor Output Line Short Circuit Inspection**

   Check for continuity between the TP sensor 3P (Blue) connector of the wire side and ground.

   Connection: Yellow/green – Ground

   Is there continuity?

   YES – Short circuit in Yellow/green wire

   NO – GO TO STEP 7.

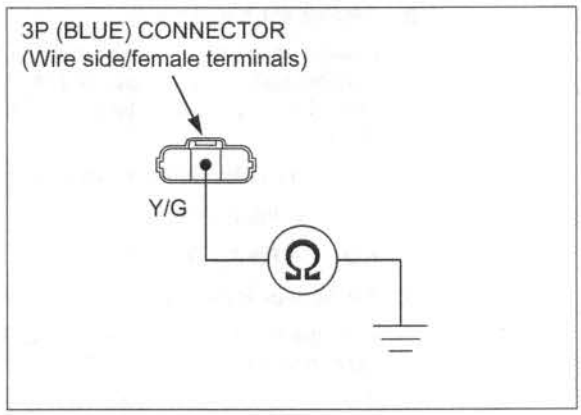

7. **TP Sensor Inspection**

   Replace the throttle body with a known good one (page 6-50).
   Erase the DTC's (page 6-18).

   Turn the "ECM" selector switch ON.

   Check the TP sensor with the HDS.

   Is DTC 8-1 indicated?

   YES – Replace the ECM with a known good one, and recheck.

   NO – Faulty original throttle body (TP sensor)

DTC 8-2 (TP SENSOR HIGH VOLTAGE)

1. **TP Sensor System Inspection**

   Connect the 12 V battery ("ECM" selector switch is ON).

   – '09: page 6-14
   – After '09: page 6-14

   Check the TP sensor with the HDS.

   Is about 5 V indicated?

   YES – GO TO STEP 3.

   NO – GO TO STEP 2.

2. **TP Sensor Inspection 1**

   Check that the TP sensor voltage increases continuously when moving the throttle from fully closed to fully opened using the data list menu of the HDS.

   Does the voltage increase continuously?

   YES – Intermittent failure

   NO – Faulty TP sensor

3. **TP Sensor Input Voltage Inspection**

   Turn the "ECM" selector switch ON.
   Measure the voltage at the wire side.

   Connection: Red/yellow (+) – Green/red (–)

   Is the voltage within 4.75 – 5.25 V?

   YES – GO TO STEP 4.

   NO – • Open circuit in Green/red wire
   • Open circuit in Red/yellow wire

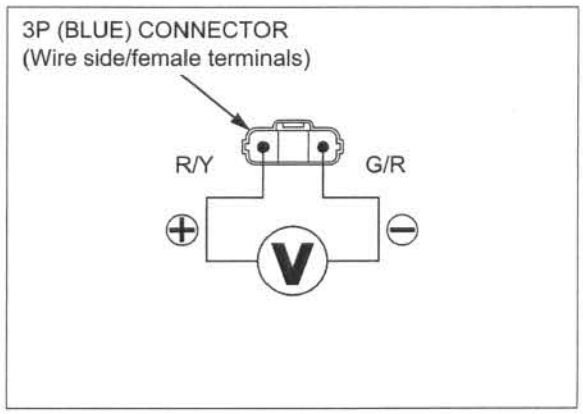

4. **TP Sensor Resistance Inspection 2**

   Replace the throttle body with a known good one (page 6-50).
   Erase the DTC's (page 6-18).

   Turn the "ECM" selector switch ON.

   Check the TP sensor with the HDS.

   Is DTC 8-2 indicated?

   YES – Replace the ECM with a known good one, and recheck.

   NO – Faulty original throttle body (TP sensor)

DTC 9-1 (IAT SENSOR LOW VOLTAGE)

1. **IAT Sensor System Inspection**

   Connect the 12 V battery ("ECM" selector switch is ON).

   – '09: page 6-14
   – After '09: page 6-14

   Check the IAT sensor with the HDS.

   Is about 0 V indicated?

   YES – GO TO STEP 2.

   NO – Intermittent failure

2. **IAT Sensor Inspection**

   Turn the "ECM" selector switch OFF.
   Disconnect the IAT sensor 2P (Gray) connector.

   Turn the "ECM" selector switch ON.
   Check the IAT sensor with the HDS.

   Is about 0 V indicated?

   YES – GO TO STEP 3.

   NO – Faulty IAT sensor

3. **IAT Sensor Output Line Short Circuit Inspection**

   Turn the "ECM" selector switch OFF.
   Check for continuity between the IAT sensor 2P (Gray) connector at the wire side and ground.

   Connection: Gray/blue – Ground

   Is there continuity?

   YES – Short circuit in Gray/blue wire

   NO – Replace the ECM with a known good one, and recheck.

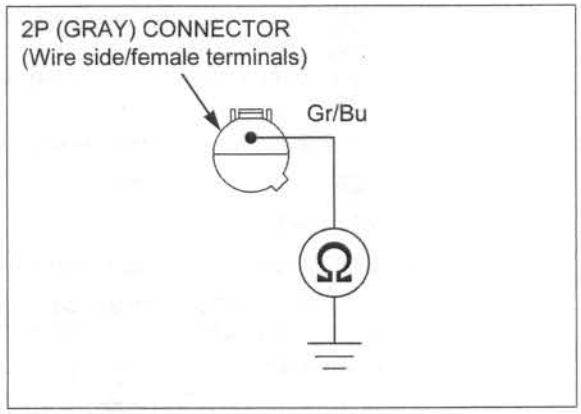

DTC 9-2 (IAT SENSOR HIGH VOLTAGE)

Before starting the inspection, check for loose or poor contact on the IAT sensor 2P (Gray) connector and ECM 33P connector, then recheck the DTC.

1. **IAT Sensor System Inspection**

   Connect the 12 V battery ("ECM" selector switch is ON).

   – '09: page 6-14
   – After '09: page 6-14

   Check the IAT sensor with the HDS.

   Is about 5 V indicated?

   YES – GO TO STEP 2.

   NO – Intermittent failure

2. **IAT Sensor Inspection**

   Turn the "ECM" selector switch OFF.

   Disconnect the IAT sensor 2P (Gray) connector.
   Connect the IAT sensor 2P (Gray) connector terminals with a jumper wire.

   Connection: Gray/blue – Green/red

   Turn the "ECM" selector switch ON.
   Check the IAT sensor with the HDS.

   Is about 0 V indicated?

   YES – Faulty IAT sensor

   NO – GO TO STEP 3.

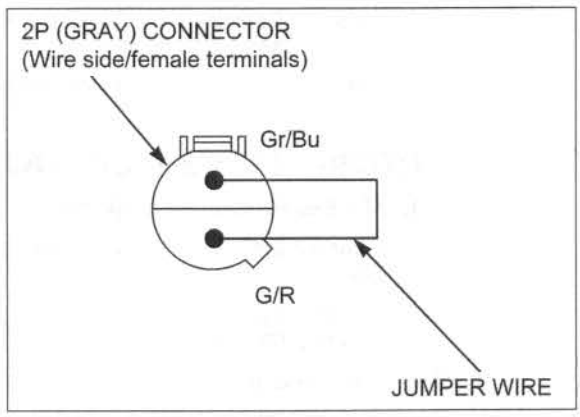

3. **IAT Sensor Line Inspection**

Turn the "ECM" selector switch OFF.
Disconnect the ECM 33P (Black) connector.
Check for continuity at the Gray/blue and Gray/black wire between the IAT sensor 2P (Gray) connector and ECM 33P (Black) connector.

Connection: 9 – Gray/blue
22 – Green/red

TOOL:
Test probe **07ZAJ-RDJA110**

Is there continuity?

YES – Replace the ECM with a known good one, and recheck.

NO – • Open circuit in Gray/blue wire
• Open circuit in Green/red wire

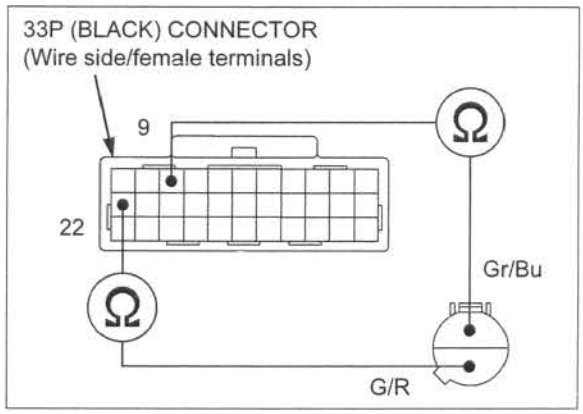

DTC 12-1 (INJECTOR)

Before starting the inspection, check for loose or poor contact on the injector 2P (Gray) connector and ECM 33P (Black) connector, then recheck the DTC.

1. **Injector System Inspection**

Erase the DTC's (page 6-18).
Connect the 12 V battery ("ECM" selector switch is ON).

– '09: page 6-14
– After '09: page 6-14

Check the injector with the HDS.

Is DTC 12-1 indicated?

YES – GO TO STEP 2.

NO – Intermittent failure

2. **Injector Input Voltage Inspection**

Turn the "ECM" selector switch OFF.

Disconnect the injector 2P (Gray) connector.
Turn the "ECM" selector switch ON.

Measure the voltage between the injector 2P (Gray) connector of the wire side and ground.

Connection: Pink/yellow (+) – Ground (–)

Is there battery voltage?

YES – GO TO STEP 3.

NO – Open circuit in Pink/yellow wire

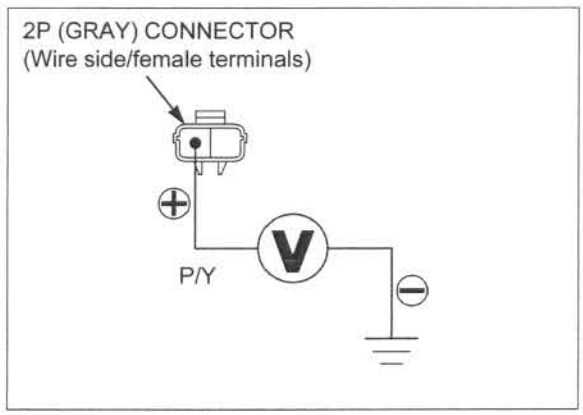

3. Injector Resistance Inspection

Turn the "ECM" selector switch OFF.

Measure the resistance of the injector 2P connector terminals.

Is the resistance within 11.6 – 12.4 Ω (20°C/68°F)?

YES – GO TO STEP 4.

NO – Faulty injector

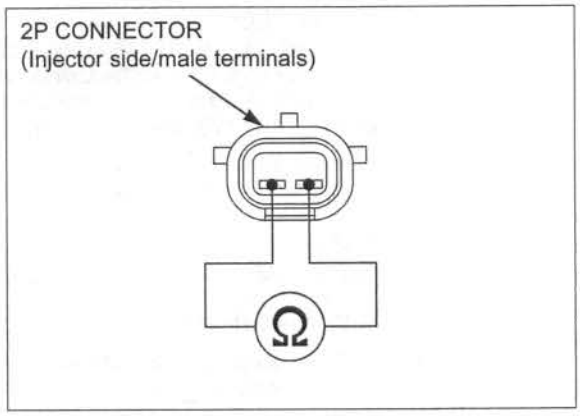

4. Injector Signal Line Open Circuit Inspection

Disconnect the ECM 33P (Black) connector.
Check for continuity between the ECM 33P (Black) connector and injector 2P (Gray) connector.

Connection: 5 – Black/blue

TOOL:
Test probe **07ZAJ-RDJA110**

Is there continuity?

YES – GO TO STEP 5.

NO – Open circuit in Black/blue wire

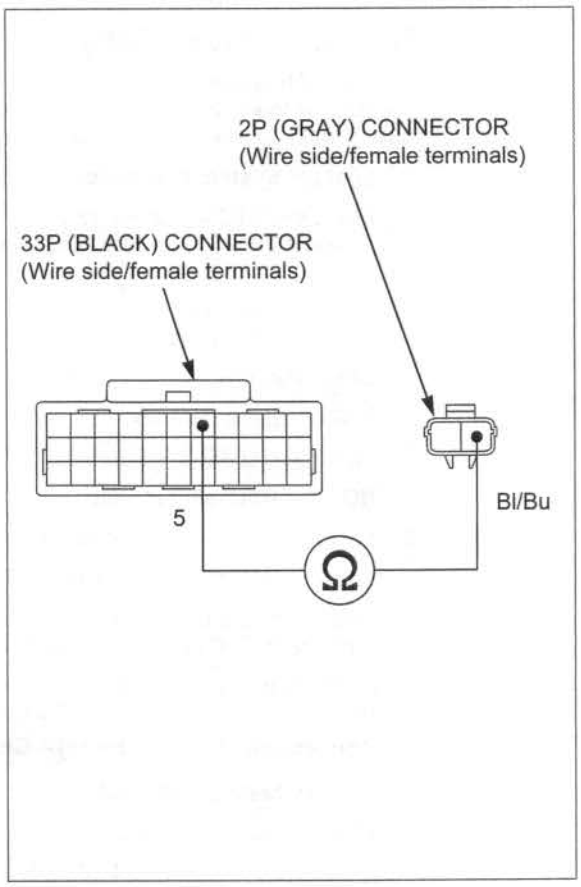

5. Injector Signal Line Short Circuit Inspection

Connect the ECM 33P (Black) connector.
Check for continuity between the injector 2P (Gray) connector at the wire side and ground.

Connection: Black/blue – Ground

Is there continuity?

YES – Short circuit in Black/blue wire

NO – Replace the ECM with a known good one, and recheck.

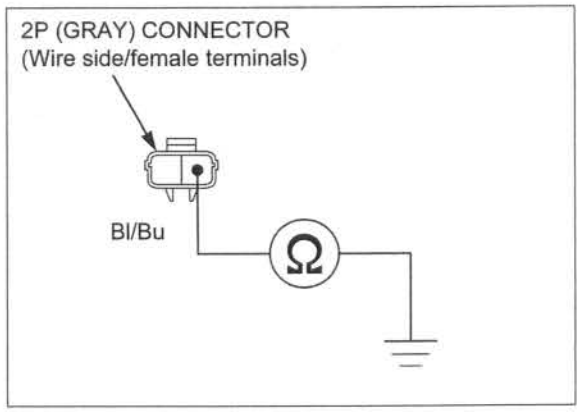

DTC 19-1 (No.1 CKP SENSOR)

Before starting the inspection, check for loose or poor contact on the alternator/CKP sensor 6P (Natural) connector and ECM 33P connector, then recheck the DTC.

DTC	CKP SENSOR	SIGNAL LINE	GROUND LINE	SIGNAL AT ECM
19-1	No.1 CKP sensor	Blue/yellow	Green/white	11
69-1	No.2 CKP sensor	White/yellow	Green	7

1. CKP Sensor System Inspection

Erase the DTC's (page 6-18).
Connect the 12 V battery ("ECM" selector switch is ON).

- '09: page 6-14
- After '09: page 6-14

Crank the engine and check the CKP sensor with the HDS.

Is DTC 19-1 indicated?

YES – GO TO STEP 2.

NO – Intermittent failure

2. CKP Sensor Peak Voltage Inspection

Turn the "ECM" selector switch OFF.
Disconnect the alternator/CKP sensor 6P connector.

Crank the engine and measure the CKP sensor peak voltage at the alternator/CKP sensor 6P connector.

Connection: Signal line (+) – Ground line (–) (Sensor side terminals)

TOOL:

IgnitionMate peak voltage tester	**MTP07-0286 (U.S.A. only) or**
Peak voltage adaptor	**07HGJ-0020100 (Not available in U.S.A.)**

with commercially available digital multimeter (impedance 10 MΩ/DCV minimum)

Is the voltage more than 0.7 V (20°C/68°F)?

YES – GO TO STEP 3.

NO – Faulty CKP sensor

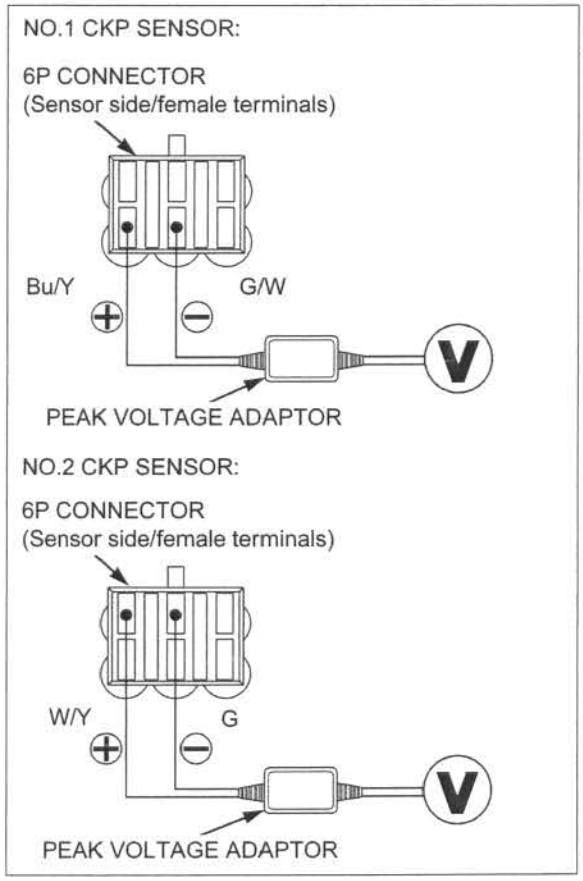

3. **CKP sensor Circuit Inspection**

   Disconnect the ECM 33P (Black) connector.

   Check for continuity at the Blue/yellow and Green/white wire between the alternator/CKP sensor 6P connector and ECM 33P connector.

   Connection: Signal line – Signal line
   10 – Ground line

   TOOL:
   Test probe **07ZAJ-RDJA110**

   Is there continuity?

   YES – Short circuit in Signal line

   NO – • Open circuit in Signal line
   • Open circuit in Ground line

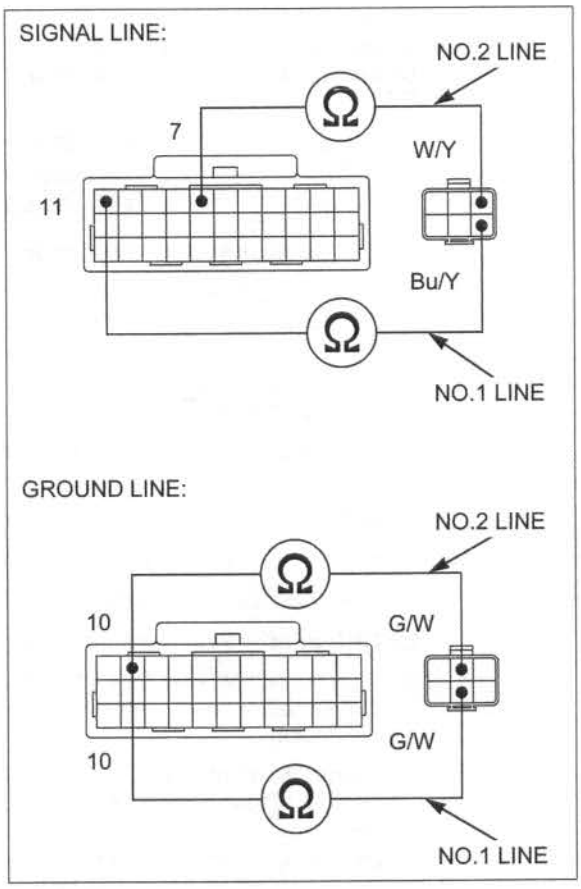

DTC 69-1 (No.2 CKP SENSOR)

See page 6-31

DTC 33-2 (EEPROM)

1. **Recheck DTC**

   Erase the DTC's (page 6-18).
   Connect the 12 V battery ("ECM" selector switch is ON).

   – '09: page 6-14
   – After '09: page 6-14

   Recheck the ECM EEPROM.

   Is DTC 33-2 indicated?

   YES – Replace the ECM with a known good one, and recheck.

   NO – Intermittent failure

MIL CIRCUIT INSPECTION

When The Engine Starts But The MIL Does Not Come On

If the engine can be started but the MIL does not come on, check as follows:

- If it does not function, check for loose or poor contact on the engine stop switch 4P (Natural) connector.
- If the connector connection properly, check as follows:

Stop the engine.
Hang the fuel tank to the left side of the frame (page 4-6).

Disconnect the ECM 33P (Black) connector.

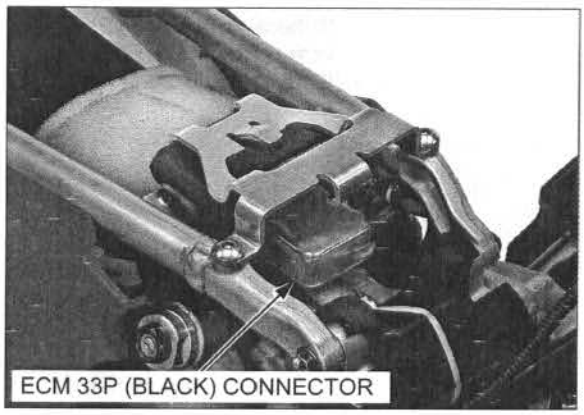

Ground the White/blue (15) wire terminal of the wire harness side connector with a jumper wire.

TOOL:
Test probe **07ZAJ-RDJA110**

Connect the 12 V battery ("ECM" selector switch is ON).

- '09: page 6-14
- After '09: page 6-14

- If the MIL comes on, replace the ECM with a known good one, and recheck.
- If the MIL does not come on, check for open circuit in the White/blue wire between the MIL and ECM. If the wire is OK, replace the MIL (Engine stop switch).

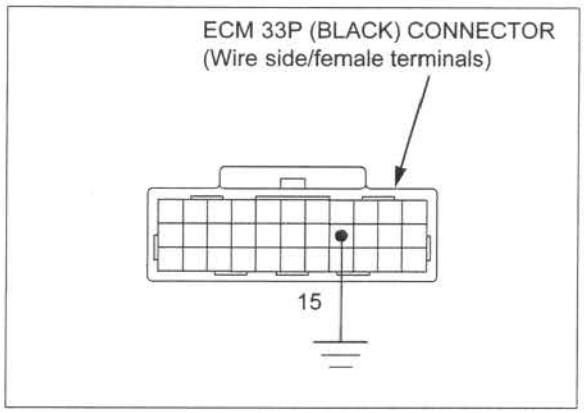

When The Engine Starts But The MIL Does Not Go Off Within A Few Seconds

If the MIL does not go off within a few seconds after the engine has been started, check as follows:

Stop the engine.
Remove the right radiator shroud (page 3-4).
Disconnect the engine stop switch 4P (Natural) connector.

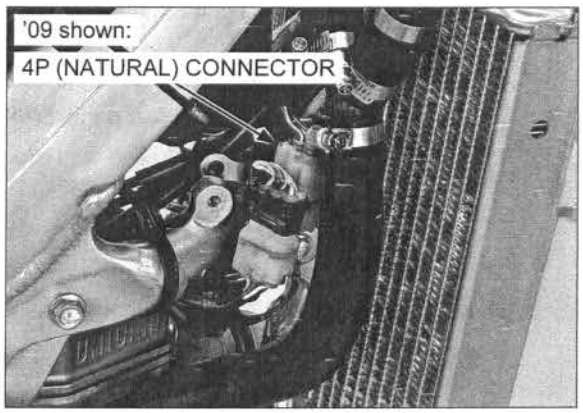

Check for continuity between the engine stop switch 4P (Natural) connector terminal of the wire harness side and ground.

Connection: White/blue – Ground

- If there is continuity, short circuit in the White/blue wire between the ECM and MIL.
- If there is no continuity, check the DLC circuit as follow:

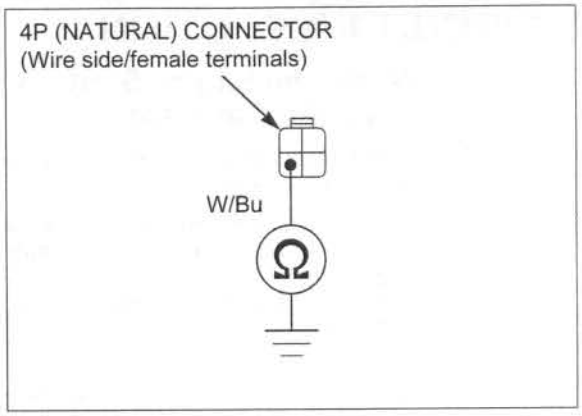

Connect the engine stop switch 4P (Natural) connector. Disconnect the ECM 33P (Black) connector.

Check for continuity between the ECM 33P (Black) connector of the wire harness side and ground.

Connection: 27 – Ground

TOOL:
Test probe **07ZAJ-RDJA110**

- If there is continuity, check for short circuit in the Brown wire between the DLC and ECM.
- If there is no continuity, replace the ECM with a known good one, and recheck.

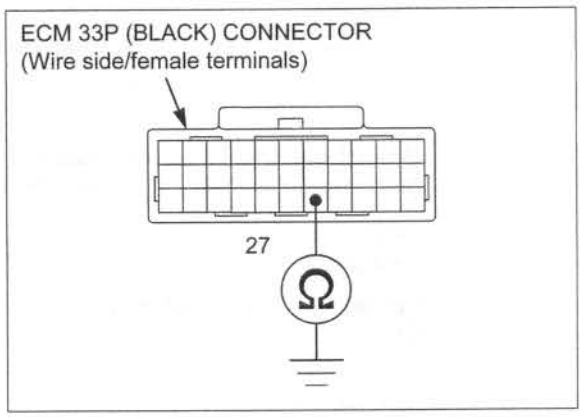

FUEL LINE REPLACEMENT

FUEL PRESSURE RELIEVING

Before disconnecting the fuel hose, relieve pressure from the system as follows.

1. Hang the fuel tank to the left side of the frame (page 4-6).
2. **'09:**

   Disconnect the fuel pump sub harness 2P (Natural) connector.

   After '09:

   Disconnect the fuel pump 5P (Black) connector.
3. Start the engine, and let it idle until the engine stalls.

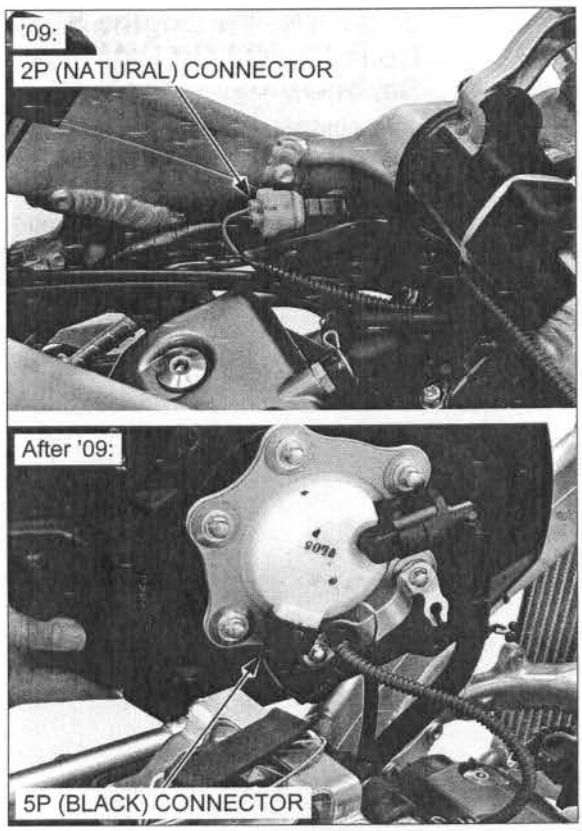

QUICK CONNECT FITTING REMOVAL

FUEL PUMP SIDE

1. Relieve the fuel pressure (page 6-34).
   Release the rubber cover and remove the quick connect fitting cover.

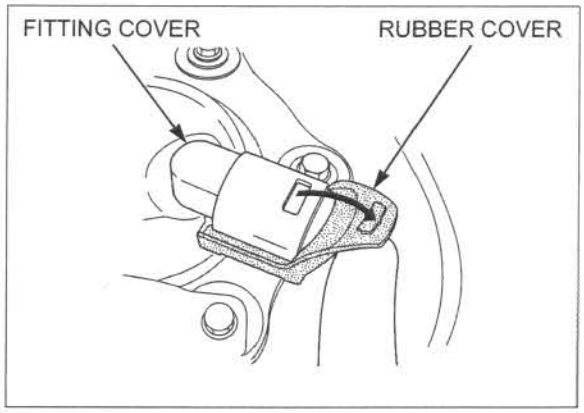

2. Check the fuel quick connect fitting for dirt, and clean if necessary.

   Place a shop towel over the quick connect fitting.

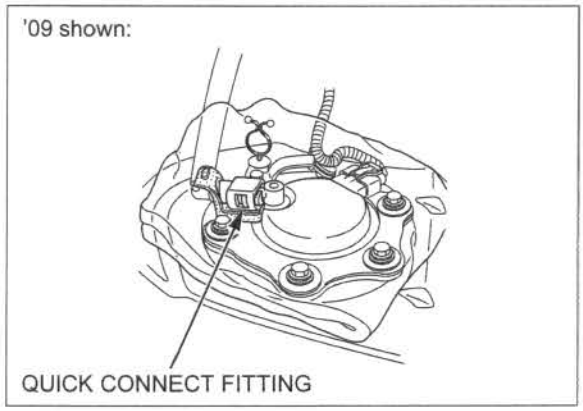

3. Hold the connector with one hand and squeeze the retainer tabs with the other hand to release them from the locking pawls.
   Pull the connector off, then remove the retainer from the fuel joint.

NOTE:
- Absorb the remaining fuel in the fuel hose with a shop towel.
- Be careful not to damage the hose or other parts.
- Do not use tools.
- If the connector does not move, keep the retainer tabs pressed down, and alternately pull and push the connector until it comes off easily.

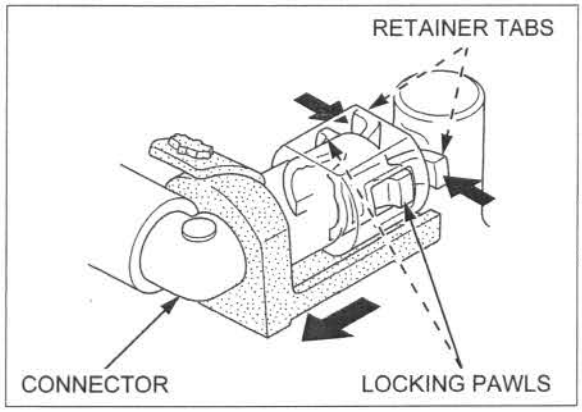

4. To prevent damage and keep foreign matter out, cover the disconnected connector and fuel joint with plastic bags.

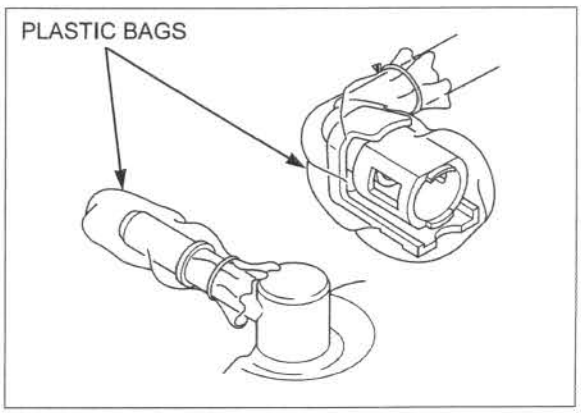

INJECTOR SIDE

1. Relieve the fuel pressure (page 6-34).

   Check the fuel quick connect fitting for dirt, and clean if necessary.

   Remove the bolt, clamp and setting rubber.

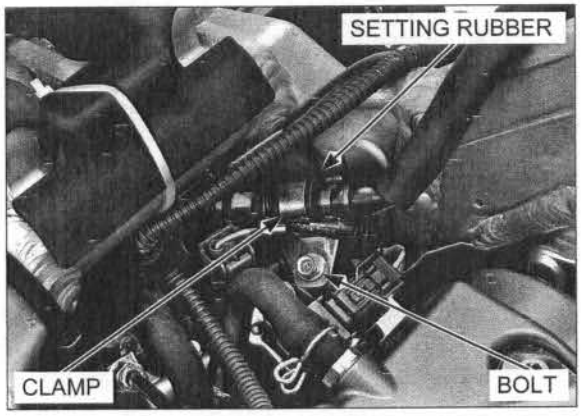

2. Release the joint rubber from the retainer.

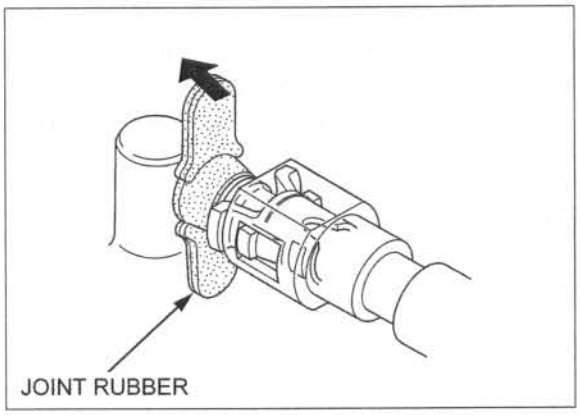

3. Place a shop towel over the quick connect fitting.

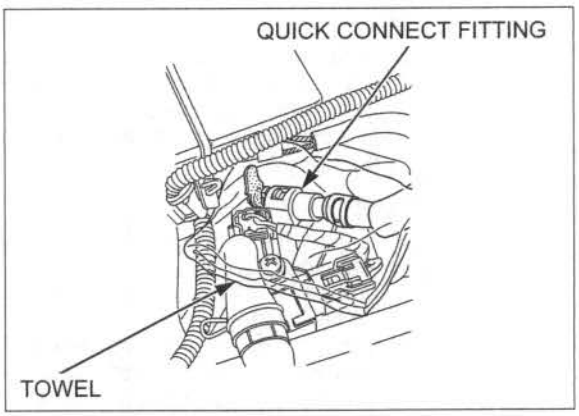

4. Hold the connector with one hand and squeeze the retainer tabs with the other hand to release them from the locking pawls.
   Pull the connector off, then remove the retainer from the injector joint.

NOTE:
- Absorb the remaining fuel in the fuel feed hose with a shop towel.
- Be careful not to damage the hose or other parts.
- Do not use tools.
- If the connector does not move, keep the retainer tabs pressed down, and alternately pull and push the connector unit it comes off easily.

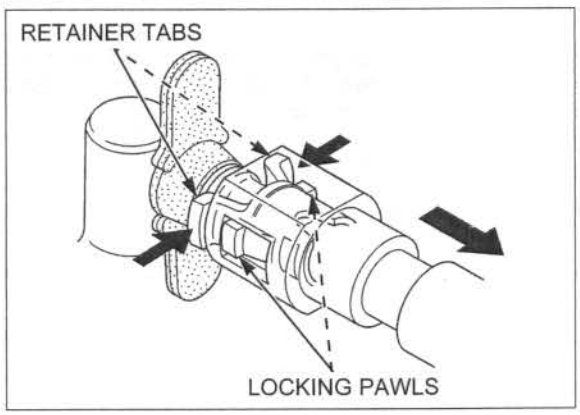

5. To prevent damage and keep foreign matter out, cover the disconnected connector and pipe end with the plastic bags.

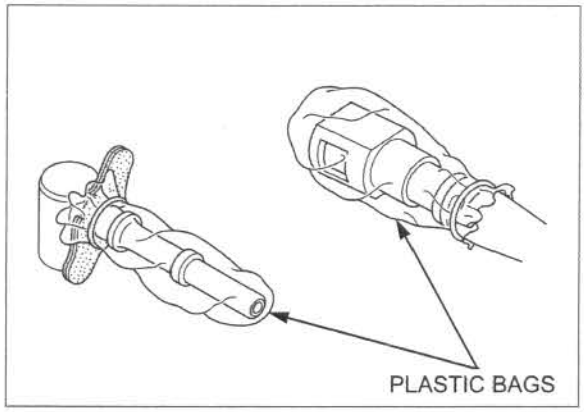

QUICK CONNECT FITTING INSTALLATION

- Always replace the retainer of the quick connect fitting and joint rubber when the fuel hose is disconnected.
- If the rubber cover and fitting cover are damaged or cut, replace them with a new one.
- Do not bend or twist the fuel hose.
- If any retainer needs replacing, use the same manufacturer's retainer as the ones being removed (The various manufactures feature different retainer specification).

FUEL PUMP SIDE

1. Insert a new retainer by aligning its locking pawls with the connector grooves.

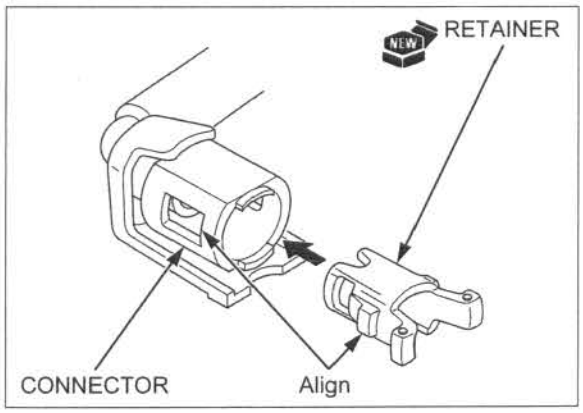

2. Align the quick connect fitting with the fuel joint while inserting the rubber cover between the connector and fuel pump plate.
   Then press the quick connect fitting onto the pipe until both retainer locking pawls lock with a "CLICK".

   If it is hard to connect, put a small amount of engine oil on the pipe end.

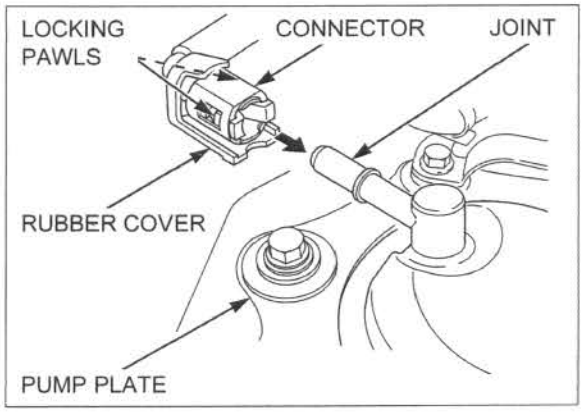

3. Make sure the connection is secure and that the pawls are firmly iocked into place; check visually and by pulling the connector.
4. Make sure the rubber cover is in place (between the quick connect fitting and fuel pump plate).

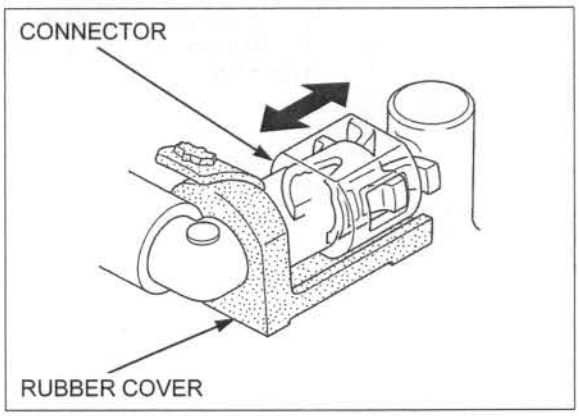

5. Install the quick connect fitting cover securely.

   Set the rubber cover tab into the quick connect fitting cover groove.
6. Increase the fuel pressure and check that there is no leakage in fuel supply system (page 4-6).

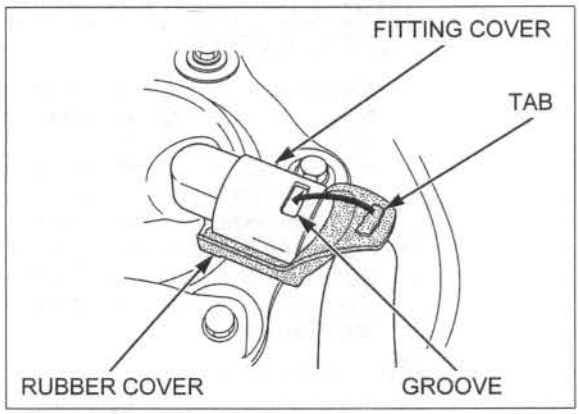

INJECTOR SIDE

1. Insert a new retainer by aligning its locking pawls with the connector grooves.

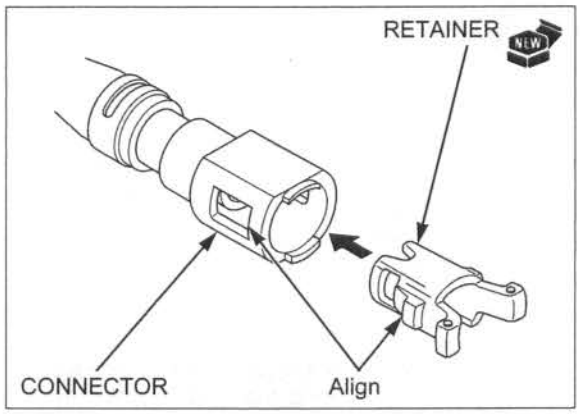

2. Install a new joint rubber and set the joint rubber to the injector joint as shown.
3. Install the connector to the injector joint by aligning retainer tabs with joint rubber grooves.
   Then press the quick connect fitting onto the injector joint until both retainer locking pawls lock with a "CLICK".

   If it is hard to connect, put a small amount of engine oil on the injector joint end.

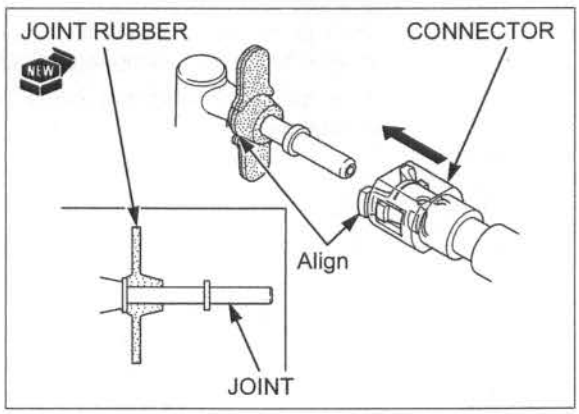

4. Make sure the connection is secure and that the pawls are firmly locked into place; check visually and by pulling the connector.

   Make sure the joint rubber is in place (between the flange and retainer tab).

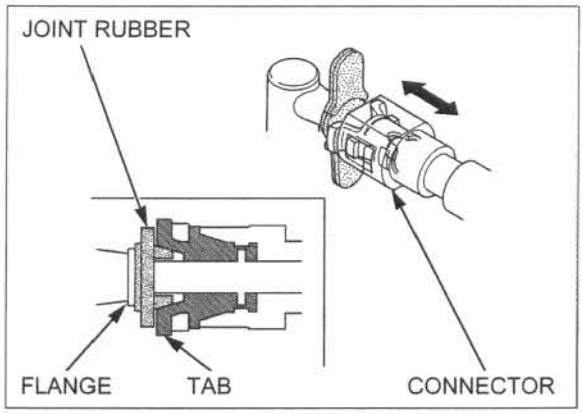

5. Install the setting rubber and clamp.

NOTE:
Install the fuel feed hose stay, aligning its tab with the groove of the fuel feed hose stay.

   Install and tighten the bolt securely.

6. Increase the fuel pressure and check that there is no leakage in fuel supply system (page 4-6).

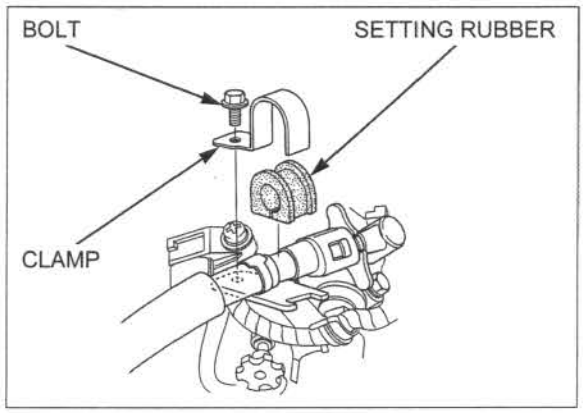

FUEL PRESSURE INCREASING

1. Connect the 12 V battery ('09: page 6-14, After '09: page 6-14).
2. **'09:**

   Temporarily install the fuel tank onto the frame.

   After '09:

   Connect the fuel pump 5P (Black) connector and install the fuel tank (page 6-46).
3. Turn the "PUMP" selector switch ON.
4. Run the fuel pump for about 3 – 5 seconds and raise the fuel pressure.
5. Turn the "PUMP" selector switch OFF.
   Check that there is no leakage in the fuel supply system.

   Remove the battery harness (page 6-14).

   Install the fuel tank (page 4-6).

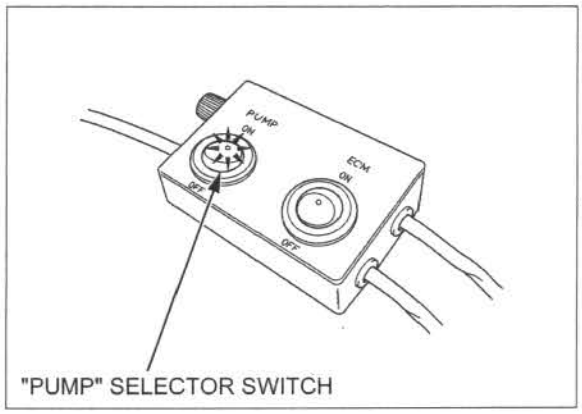

FUEL PRESSURE TEST

NOTE:
Make sure there is one liter or more of fuel remaining in the fuel tank before starting fuel pressure test.

Relieve the fuel pressure (page 6-34).
Disconnect the quick connect fitting from the fuel pump side (page 6-35).

After '09: Connect the fuel pump 5P (Black) connector.

Attach the fuel pressure gauge, hoses, attachment joint and manifold between the fuel pump and quick connector.

TOOLS:

(1): Fuel pressure gauge (0 – 100 psi)	**07406-0040004**
(2): Pressure gauge manifold	**07ZAJ-S5A0111**
(3): Hose attachment, 9 mm/9 mm	**07ZAJ-S5A0120**
(4): Hose attachment, 8 mm/9 mm	**07ZAJ-S7C0100**
(5): Attachment joint, 8 mm/9 mm	**07ZAJ-S7C0200**
TOOLS, U.S.A. only:	
Fuel pressure gauge	**07406-004000B**
Pressure manifold hose	**07AMJ-HW3A100**
Adaptor, male	**07AAJ-S6MA300**
Adaptor, female	**07AAJ-S6MA500**

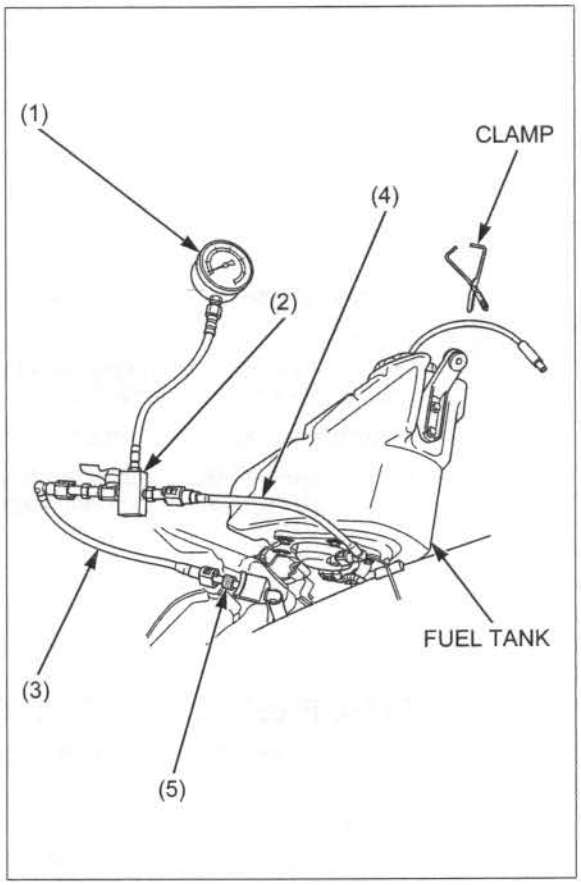

Connect the 12 V battery.

- '09: page 6-14
- After '09: page 6-14

Support the fuel tank in an upright position onto the frame then remove the hose clamp from the breather hose.
Turn the "PUMP" selector switch ON.
Read the fuel pressure.

Standard: 333 – 353 kPa (3.4 – 3.6 kgf/cm^2, 48 – 51 psi)

If the fuel pressure is higher than specified, replace the fuel pump assembly (faulty fuel pump or fuel pressure regulator).
If the fuel pressure is lower than specified, inspect the following:

- Fuel line leaking
- Restricted fuel hose or fuel tank breather hose
- Fuel pump (page 6-41)
- Clogged fuel strainer screen (Faulty fuel pump assembly)

'09: After inspection, disconnect the battery harness.

After '09: After inspection, disconnect the battery harness and connect the DLC/fuel pump sub harness 4P (Red) connector.

Relieve the fuel pressure by starting the engine and let it idle until it stalls (page 6-34).

Wrap a shop towel around the attachment to soak up any spilled fuel.

Remove the fuel pressure gauge, hose attachments, attachment joint and manifold.

Connect the quick connect fitting to the fuel pump side (page 6-37).

FUEL FLOW INSPECTION

NOTE:
Make sure there is one liter or more of fuel remaining in the fuel tank before starting fuel flow inspection.

Relieve the fuel pressure (page 6-34).

Disconnect the quick connect fitting from the fuel pump side (page 6-35).

Connect the 12 V battery.

- '09: page 6-14
- After '09: page 6-14

Connect the hose attachment to the fuel joint of the fuel tank.

TOOL:

Hose attachment, 8 mm/9 mm	**07ZAJ-S7C0100**
TOOLS, U.S.A. only:	
Pressure manifold hose	**07AMJ-HW3A100**
Adaptor, female	**07AAJ-S6MA500**

Support the fuel tank in an upright position onto the frame then remove the hose clamp from the breather hose.

Wipe spilled gasoline out of the container.

Place the end of the hose into an approved gasoline container.

Turn the "PUMP" selector switch ON for 10 seconds. Measure the amount of fuel flow.

Amount of fuel flow:
50 cm³ (1.7 US oz, 1.8 Imp oz) minimum/10 seconds at 12 V

If the fuel flow is less than specified, inspect the following:

- Pinched or clogged fuel hose
- Fuel pump unit (page 6-41)

Connect the quick connect fitting to the fuel pump side (page 6-37).

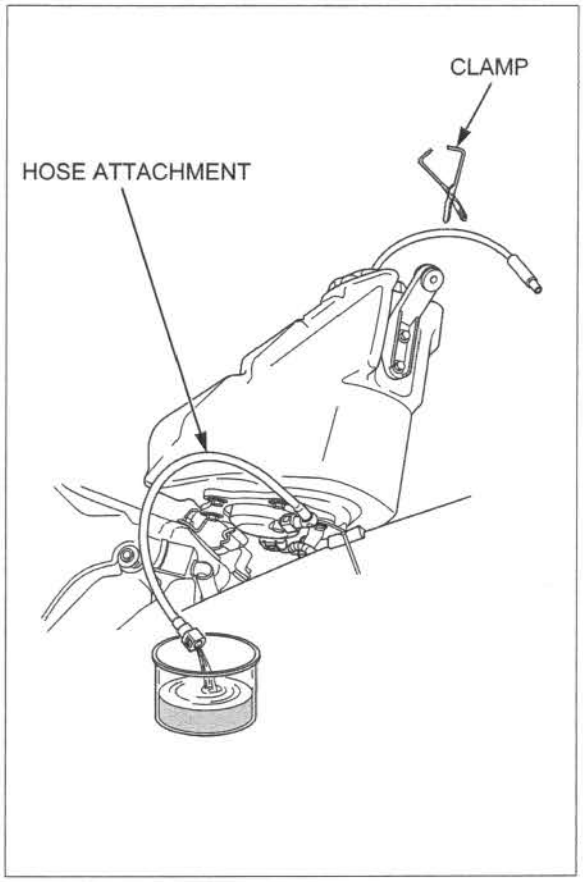

FUEL PUMP UNIT

INSPECTION

Before starting inspection, check the following:

- Engine stop switch (page 17-17)
- Regulator/rectifier (page 17-11)

Connect the 12 V battery.

- '09: page 6-14
- After '09: page 6-14

Turn the "PUMP" selector switch ON and confirm that the fuel pump operates.

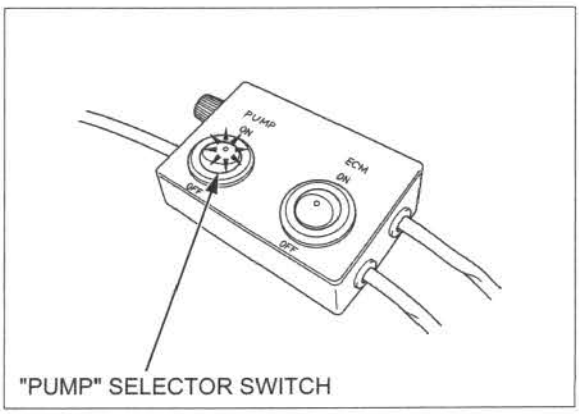

Turn the "PUMP" selector switch OFF and disconnect the fuel pump 5P (Black) connector.

Turn the "PUMP" selector switch ON and measure the voltage between the terminals.

Connection: Black (+) – Green (–)

There should be battery voltage.

If there is battery voltage, replace the fuel pump unit.

If there is no battery voltage, open circuit in Black or Green wire between the regulator/rectifier connector and fuel pump sub harness connector.

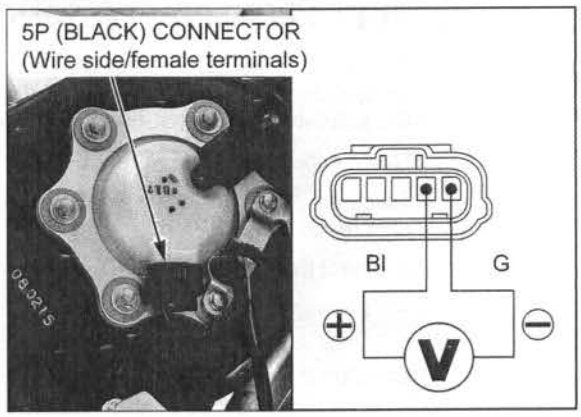

REMOVAL

Remove the fuel tank (page 6-46).

Remove the following:

- Six fuel pump mounting bolts
- Stopper cable guide
- Stopper cable
- Four washers
- Six collars
- Six conical spring washers
- Fuel pump plate

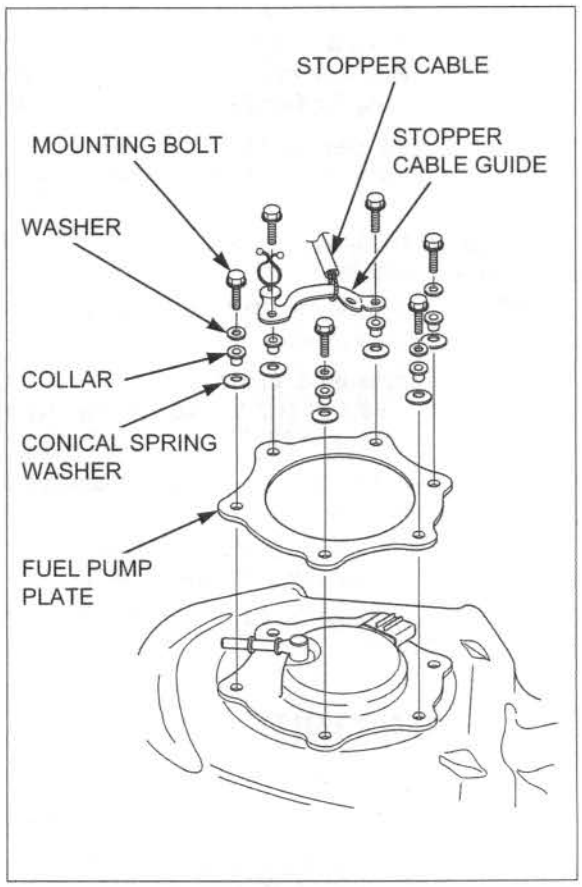

Be careful not to damage the fuel pump wire.

Remove the fuel pump unit and O-rings.

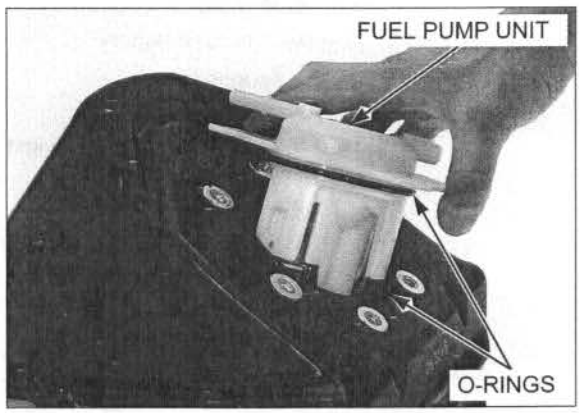

DISASSEMBLY/INSPECTION

Remove the fuel pump unit (page 6-42).

Check the fuel pump wires for loose connection or damage.

Disconnect the fuel pump wires from the fuel pump base.

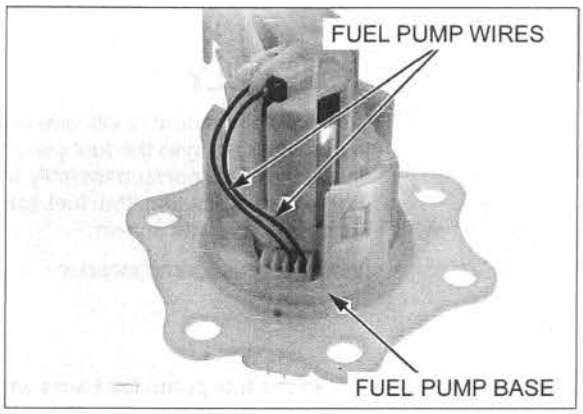

Check the hooks of the fuel pump unit holder and tabs on the fuel pump base for damage or discoloration.
If the hooks and tabs are damaged or discolored, replace the fuel pump unit as an assembly.

Be careful not to damage the hooks and tabs.

Release the hooks of the fuel pump unit holder from the grooves on the fuel pump base tabs while pushing the holder against the base and slightly spreading the base tabs.

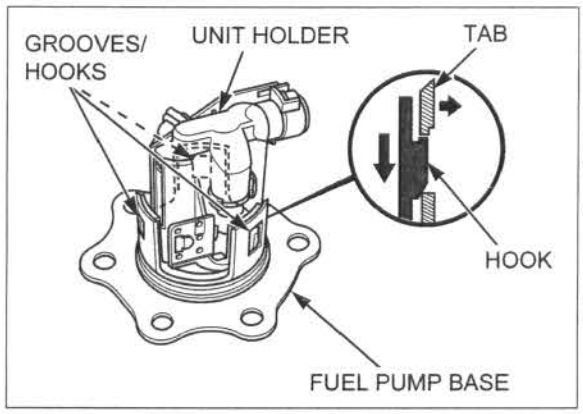

Wipe the spilled out fuel immediately.

Remove the fuel pump unit holder assembly from the fuel pump base.
Remove the O-ring.

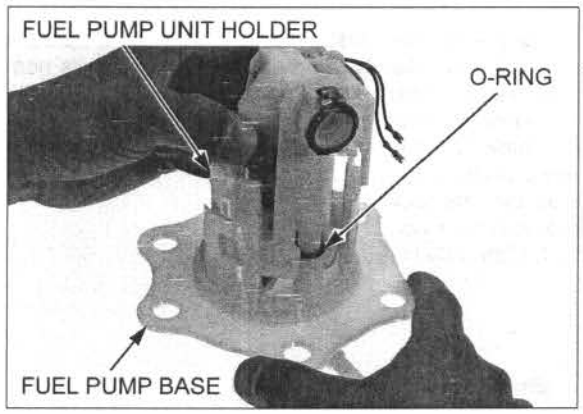

Check the fuel strainer for clog, damage or deterioration and replace if necessary.

Check the fuel strainer clip for looseness, deformation or damage and replace if necessary.

Be careful not to damage the hook, boss and clip.

Slightly turn the fuel strainer clockwise and release its hook from the joint boss of the fuel pump assembly.
Remove the fuel strainer.

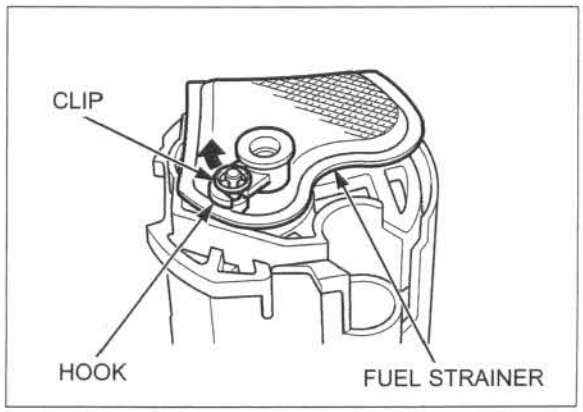

Remove the fuel pump stopper, fuel pump assembly and O-ring.

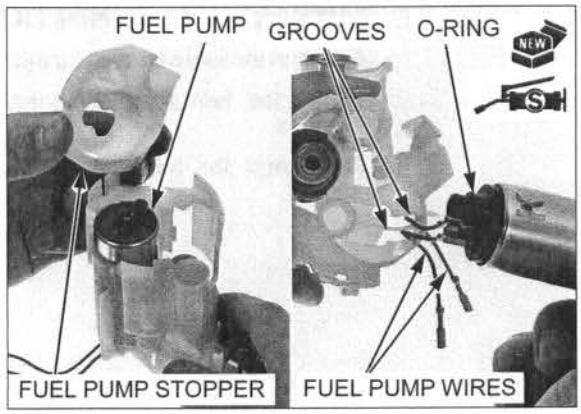

ASSEMBLY

Apply small amount of silicone grease to a new O-ring.
Install the O-ring to the fuel pump assembly.
Install the fuel pump assembly into the fuel pump unit holder while routing the fuel pump wires through the holder grooves as shown.

Install the fuel pump stopper.

Do not blow into the fuel pump.

Clean the fuel pump joint area with compressed air.

Install a new fuel strainer onto the fuel pump assembly joint.

Be careful not to damage the hook, boss and clip.

Turn the strainer counterclockwise until its hook is completely seated on the joint boss.

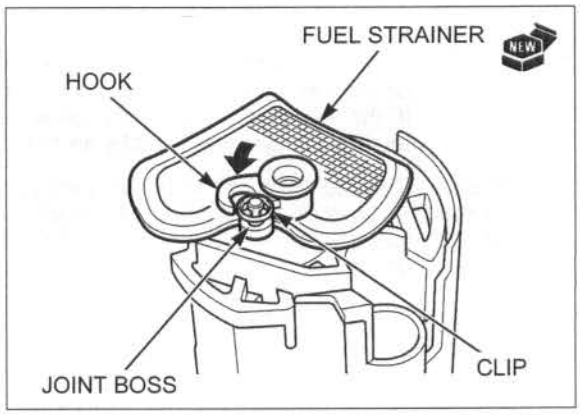

Apply small amount of silicone grease to a new O-ring.
Install the O-ring to the fuel pump base.

Be sure that the hooks are completely seated in the grooves. Replace the fuel pump unit if the gap between the hook and tab is more than 1.0 mm (0.04 in).

Install the fuel pump unit holder assembly into the fuel pump base while aligning its hooks with the grooves in the pump base tabs.

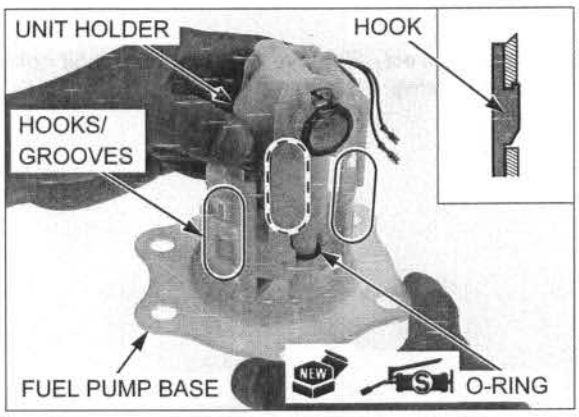

Be careful not to damage the fuel pump wires.

Connect the fuel pump wires to the fuel pump base terminals as shown.

Install the fuel pump unit (page 6-45).

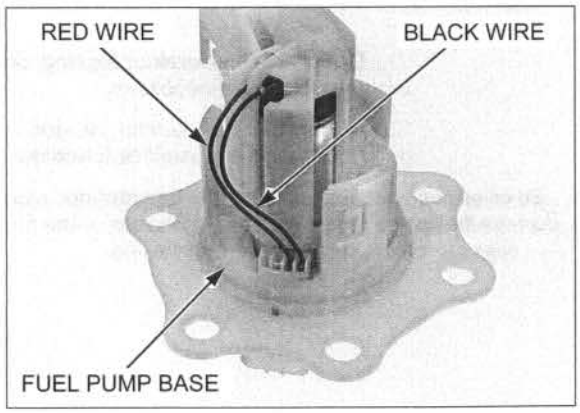

INSTALLATION

Apply engine oil to a new O-ring.

Install a new O-ring onto the fuel pump unit.

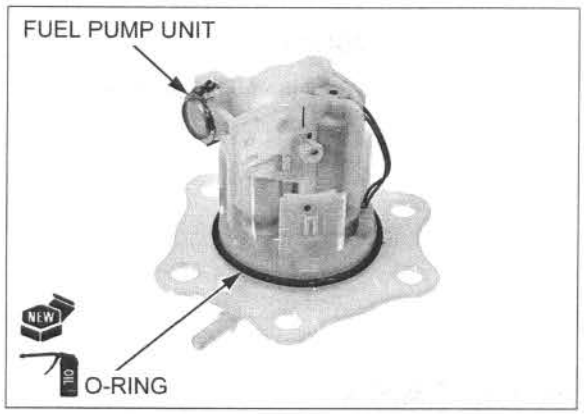

Install a new O-ring into the fuel tank groove.

Be careful not to damage the fuel pump wire.

Install the fuel pump unit into the fuel tank.

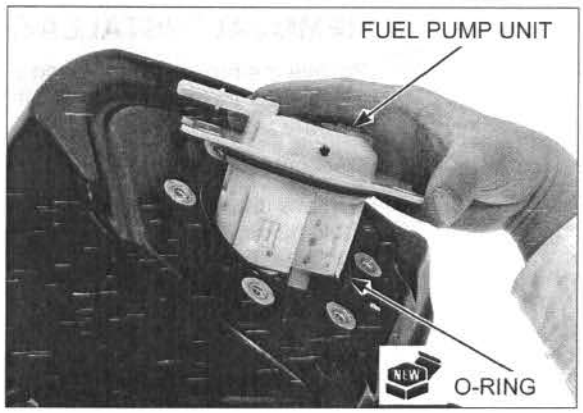

Install the fuel pump plate with its identification mark facing toward the front side and facing up.

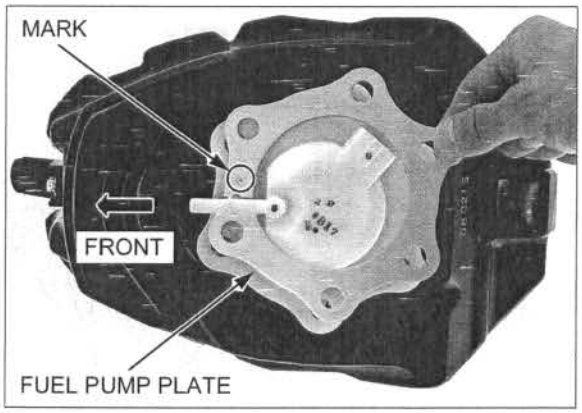

Install the following:

Install the conical spring washers in the shown direction.

- Six conical spring washers
- Six collars
- Four washers
- Stopper cable (to the stopper cable guide)
- Stopper cable guide
- Six fuel pump mounting bolts

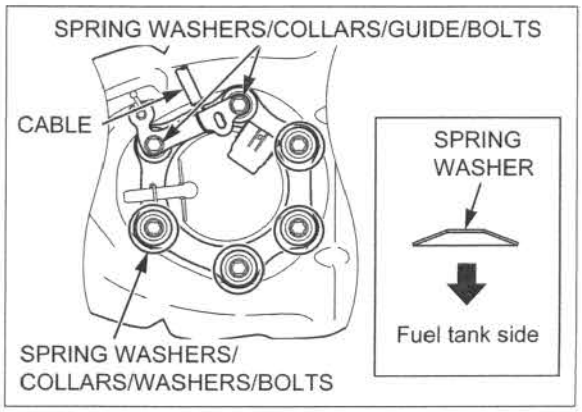

Tighten the fuel pump mounting bolts to the specified torque in the specified sequence as shown.

TORQUE: 11 N·m (1.1 kgf·m, 8 lbf·ft)

Install the fuel tank (page 6-46).

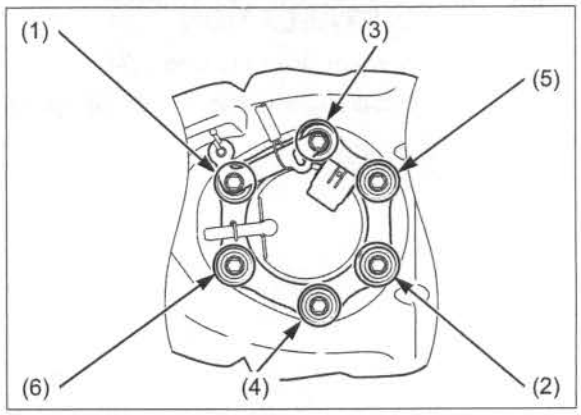

FUEL TANK

REMOVAL/INSTALLATION

Relieve the fuel pressure (page 6-34).
Disconnect the quick connect fitting from the fuel pump side (page 6-35).

Disconnect the fuel tank 5P (Black) connector.

Remove the fuel pump wire clamp from the stopper cable guide.
Hold the fuel tank and disconnect the stopper cable from the frame stay.
Remove the fuel tank.

For fuel pump unit removal (page 6-42).

Installation is in the reverse order of removal.

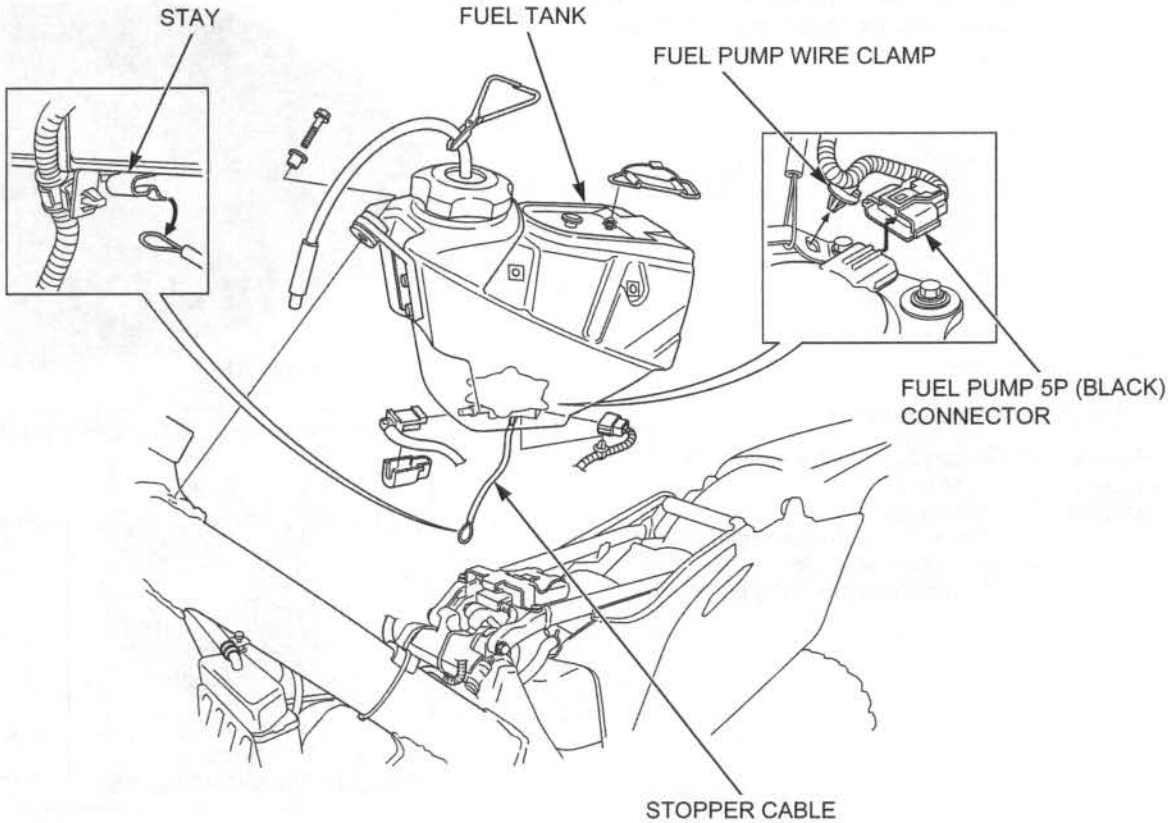

AIR CLEANER HOUSING

REMOVAL

Remove the following:

- Rear fender (page 3-5)
- Sub-frame (page 3-6)

Remove the screws and mud guard.

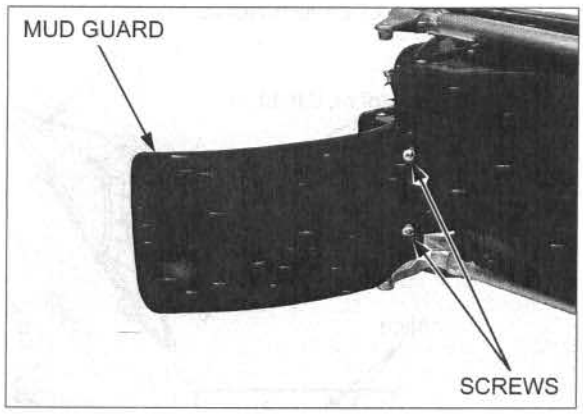

Remove the air cleaner housing mounting bolts.

Remove the air cleaner housing while releasing air cleaner housing cover tabs from the sub-frame.

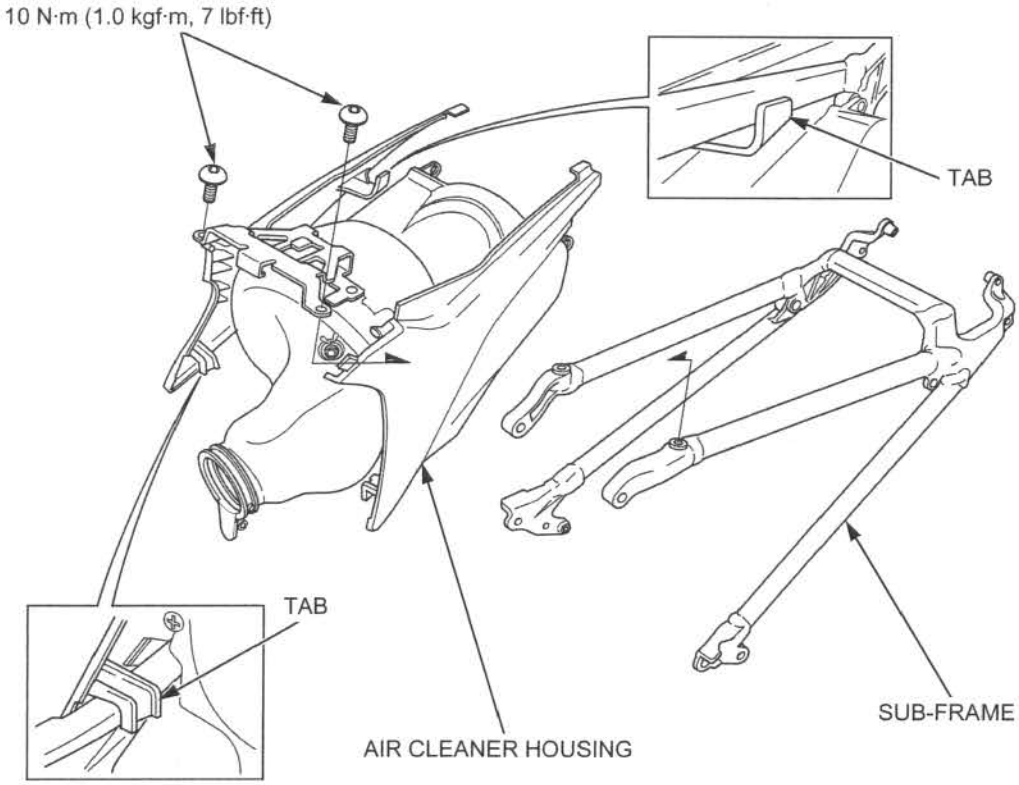

INSPECTION/INSTALLATION

Check that the connecting boot is sealed properly at the air cleaner housing.
Check the air cleaner housing for damage.

Installation is in the reverse order of removal.

TORQUE:

Mud guard mounting screw:
1.1 N·m (0.1 kgf·m, 0.8 lbf·ft)
Air cleaner housing mounting bolt:
10 N·m (1.0 kgf·m, 7 lbf·ft)

DISASSEMBLY/ASSEMBLY

Remove the air cleaner housing (page 6-47).

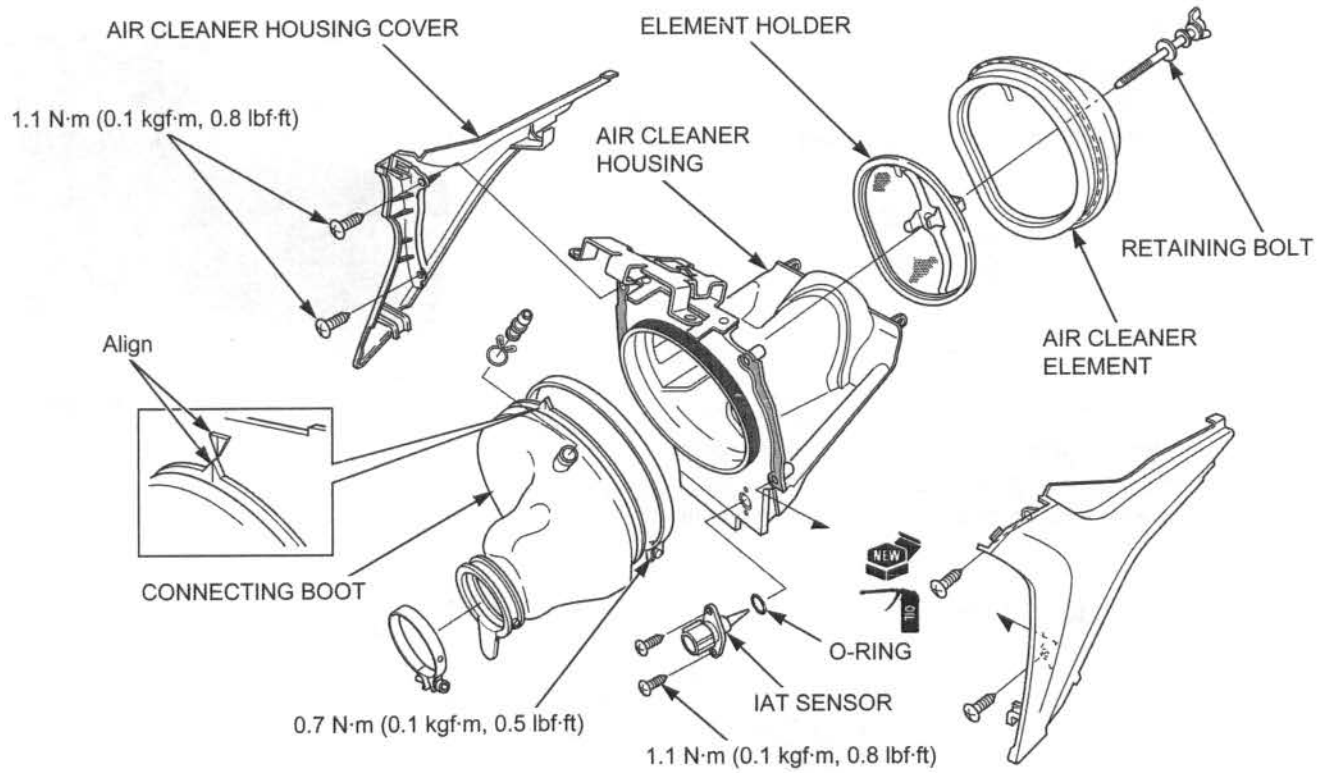

: Apply Honda Bond A or Honda Handgrip Cement or equivalent

: Apply cemedine # 366 or equivalent

INJECTOR

REMOVAL

Remove the throttle body (page 6-50).

Clean around the injector base with compressed air before removing the injector.

Remove the bolts and injector joint/injector.

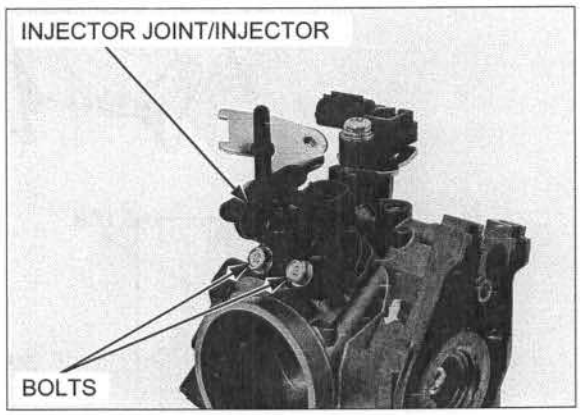

Remove the injector from the injector joint.

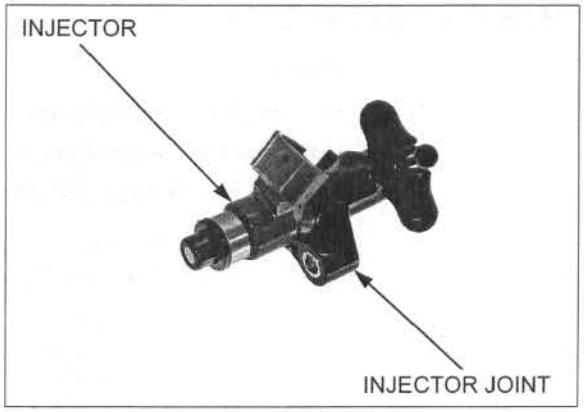

Remove the O-ring, cushion ring and seal ring.

INSTALLATION

Coat a new O-ring and seal ring with engine oil.

Install a new O-ring, cushion ring and seal ring, being careful not to damage them.

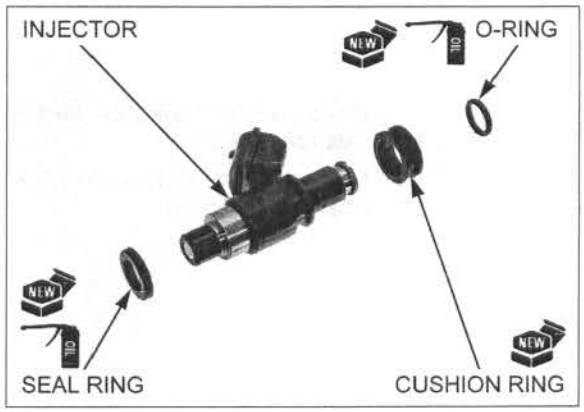

Be careful not to damage the O-ring.

Install the injector into the injector joint.
Align the boss of the injector with the injector terminals as shown.

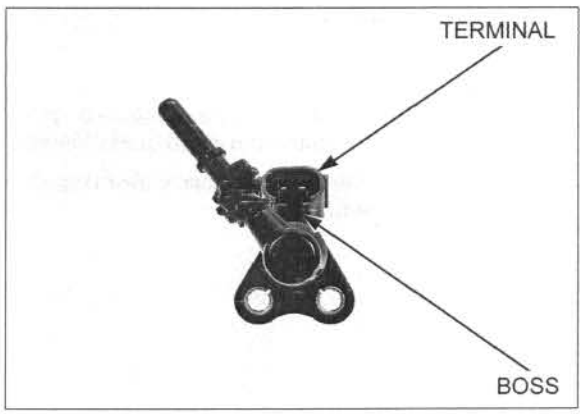

Install the injector joint/injector to the throttle body.

Install and tighten the injector joint bolts to the specified torque.

TORQUE: 5.1 N·m (0.5 kgf·m, 3.8 lbf·ft)

Install the throttle body (page 6-53).

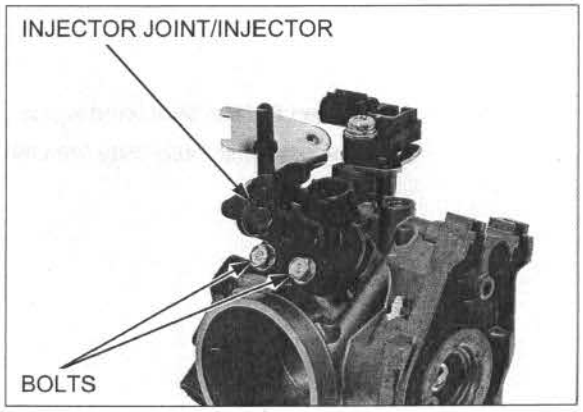

THROTTLE BODY

REMOVAL

Relieve the fuel pressure (page 6-34).

Remove the sub-frame (page 3-6).

Disconnect the TP sensor 3P (Blue) connector.

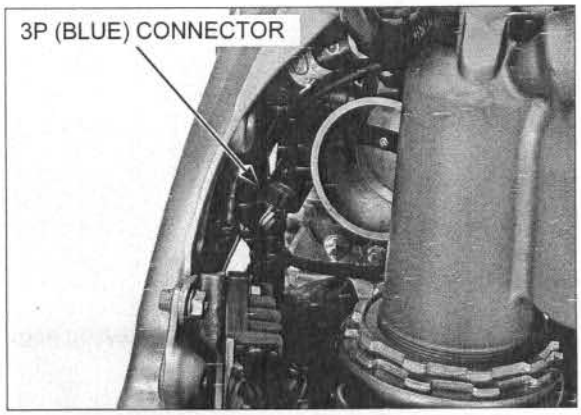

Disconnect the quick connect fitting from the injector side (page 6-36).

Disconnect the injector 2P (Gray) and MAP sensor 3P (Black) connectors.

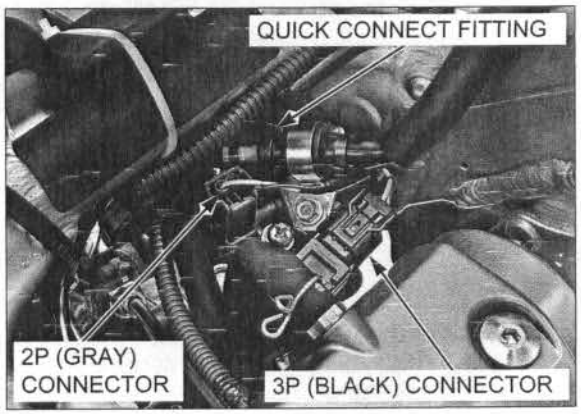

Raise the rear wheel off the ground by placing a workstand or equivalent under the engine.

Remove the rear shock absorber upper mounting bolt and nut.

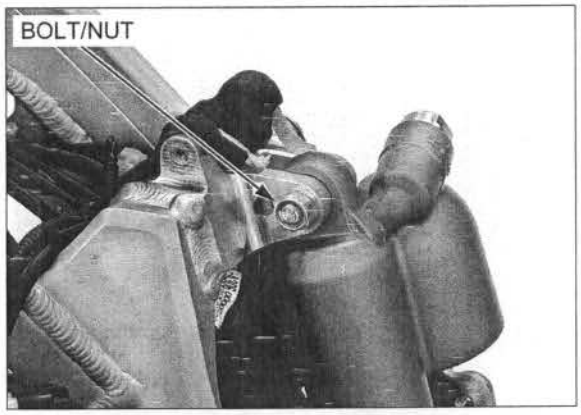

Loosen the insulator band screw.

Release the throttle body from the insulator.

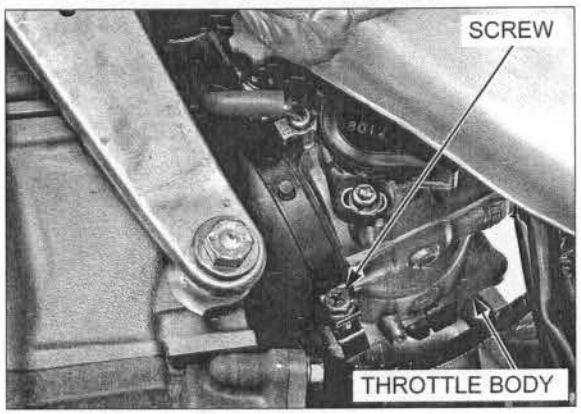

Remove the clamp of the MAP sensor and injector wire harness.

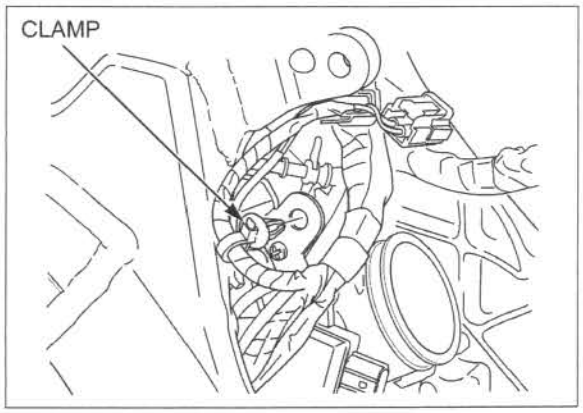

Remove the bolt.
Remove the throttle drum cover while releasing its slot from the throttle body tab.

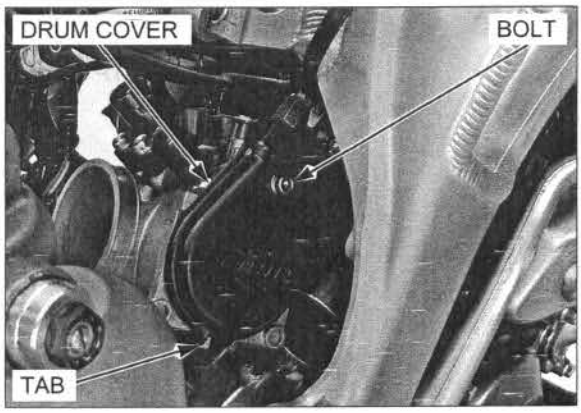

Loosen the throttle cable adjuster lock nut, adjuster and cable bolts, then disconnect the throttle cables from the throttle drum.

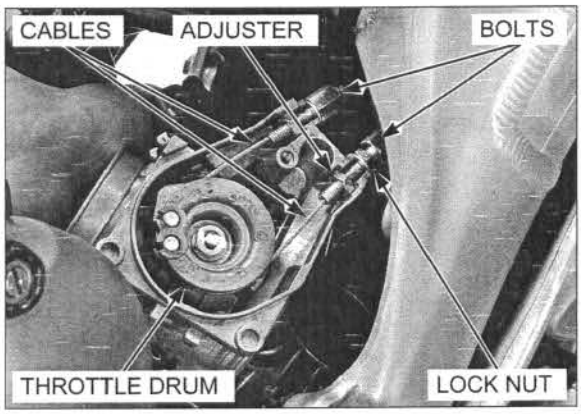

DISASSEMBLY/ASSEMBLY

NOTICE

- *The throttle body is factory pre-set. Do not disassemble in a way other than shown in this manual.*
- *Do not snap the throttle valve from full open to full close after the throttle cable has been removed. It may cause incorrect idle operation.*
- *Do not damage the throttle body. It may cause incorrect throttle valve operation.*
- *Do not loosen or tighten the white painted bolts, nuts and screws of the throttle body. Loosening or tightening them can cause throttle valve and idle control failure.*
- *Always clean the throttle body before disassembly to prevent dirt and debris from entering the passages.*
- *Do not remove the TP sensor.*

LEFT VIEW:

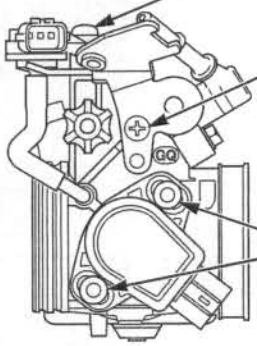

REARVIEW:

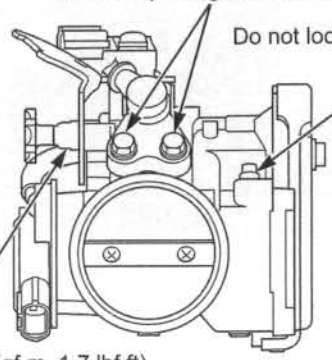

RIGHT VIEW:

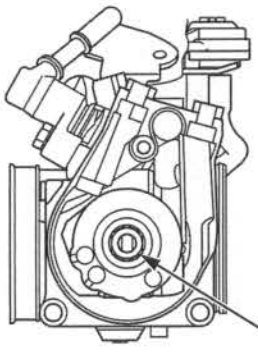

Remove the following:

- MAP sensor (page 6-56)
- Injector (page 6-48)
- Fast idle knob (page 6-54)

Blow open all air passages in the throttle body with compressed air.

NOTE:
Cleaning the air passages with a piece of wire will damage the throttle body.

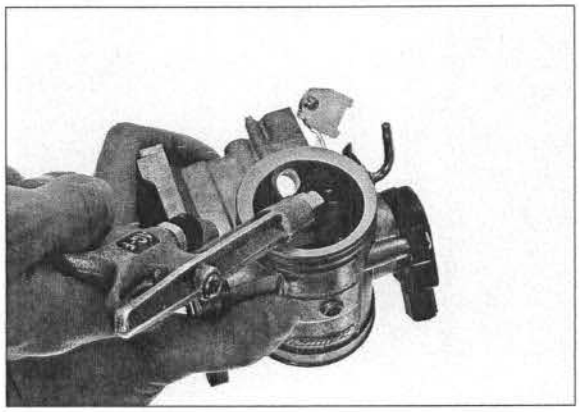

INSTALLATION

Connect the throttle cables to the throttle drum and throttle body.

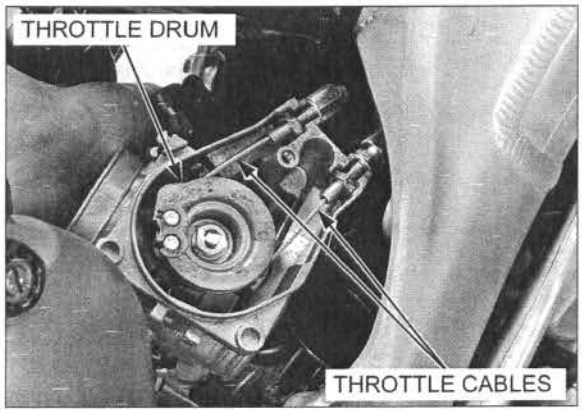

Install the throttle drum cover while aligning its slot with the tab of the throttle body.

Install and tighten the bolt to the specified torque.

TORQUE: 3.4 N·m (0.3 kgf·m, 2.5 lbf·ft)

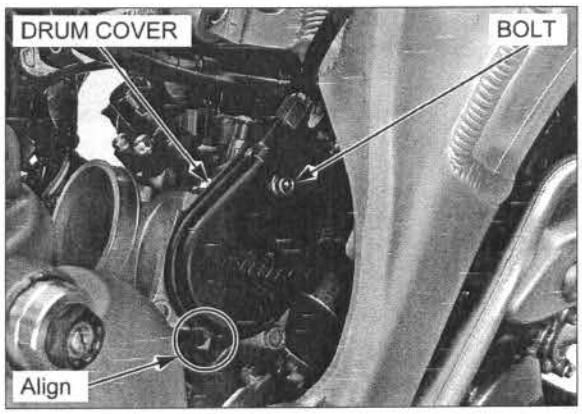

Route the wire harness properly (page 1-19).

Install the clamp of the MAP sensor and injector wire harness to the stay.

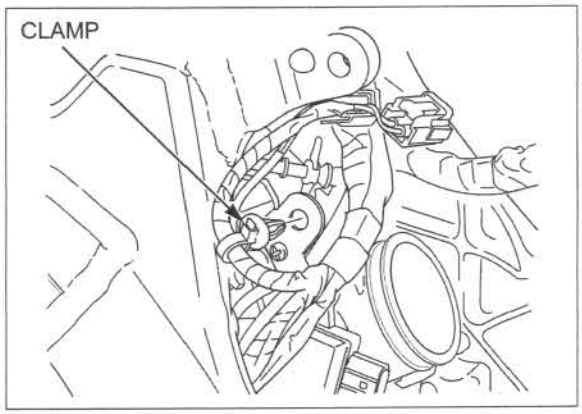

Install the throttle body by aligning its tab with the insulator groove.

Align the insulator band hole with the insulator tab.

Tighten the insulator band screw as shown.

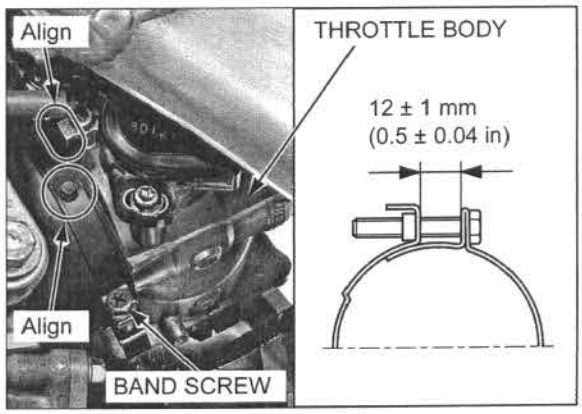

Install the rear shock absorber upper mounting bolt by aligning cut-outs of the frame and upper mounting bolt.

Install and tighten the rear shock absorber upper mounting nut to the specified torque.

TORQUE: 44 N·m (4.5 kgf·m, 32 lbf·ft)

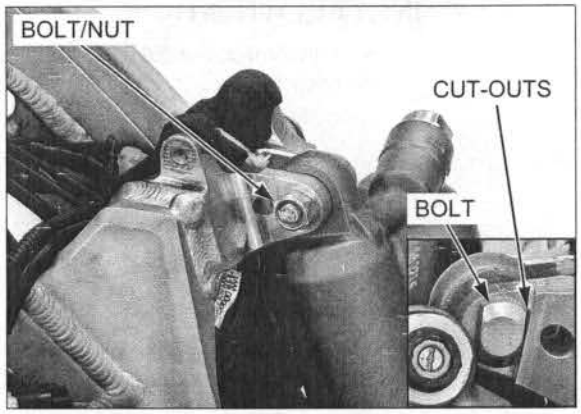

Route the wire harness and hoses properly (page 1-19).

Connect the injector 2P (Gray) and MAP sensor 3P (Black) connectors.

Connect the quick connect fitting to the injector joint (page 6-38).

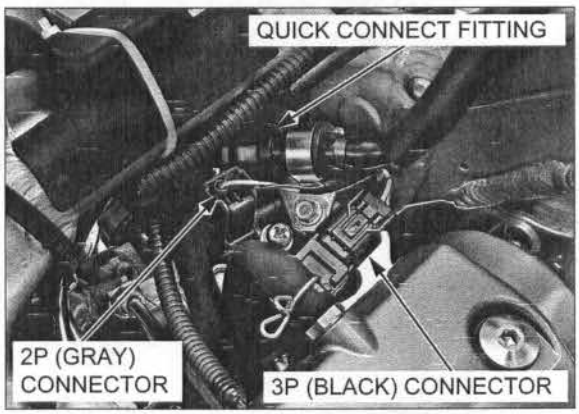

Connect the TP sensor 3P (Blue) connector.

Adjust the throttle grip freeplay (page 4-7).

Install the sub-frame (page 3-7).

Install the fuel tank (page 6-46).

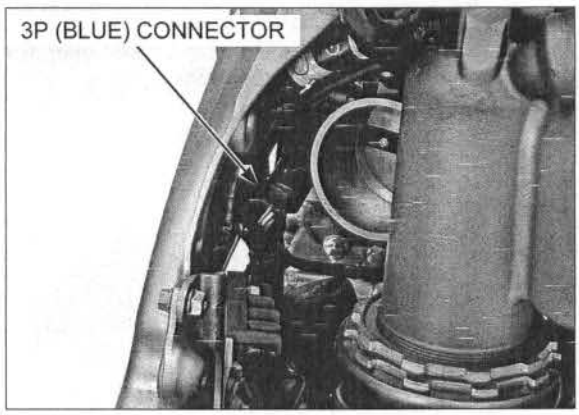

FAST IDLE KNOB

REMOVAL

Remove the throttle body (page 6-50).

Clean around the fast idle knob with compressed air before removing the fast idle knob.

Loosen the lock nut and remove the fast idle knob.

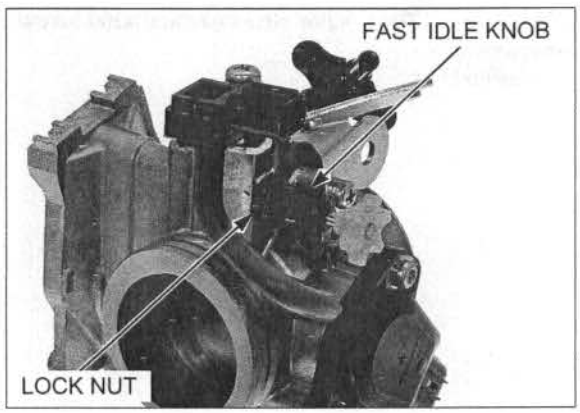

INSPECTION

Check the fast idle knob operation:

- Turn the fast idle knob counterclockwise, then the valve should be pulled into the valve body.
- Turn the fast idle knob clockwise, then the valve should be come out from the valve body.

Check the fast idle knob for wear or damage.
Replace the fast idle knob if necessary.

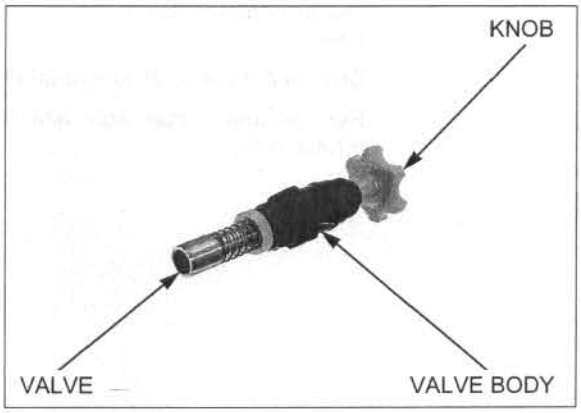

INSTALLATION

Install the fast idle knob and tighten the lock nut to the specified torque.

TORQUE: 2.3 N·m (0.2 kgf·m, 1.7 lbf·ft)

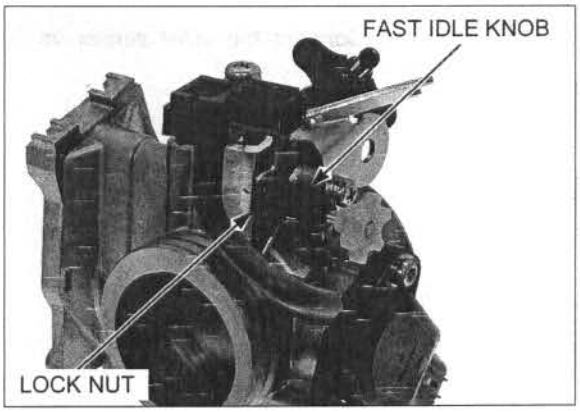

MAP SENSOR

OUTPUT VOLTAGE INSPECTION

Connect the 12 V battery ("ECM" selector switch is ON).

- '09: page 6-14
- After '09: page 6-14

Connect the HDS pocket tester (page 6-16).

View the voltage with HDS pocket tester.

Standard: 2.7 – 3.1 V

The MAP sensor output voltage (above) is measured under the standard atmosphere (1 atm = 1,013 hPa).
The MAP sensor output voltage is affected by the distance above sea level, because the output voltage is changed by atmospheric pressure.
Check the altitude and be sure that the measured voltage falls within the specified value.

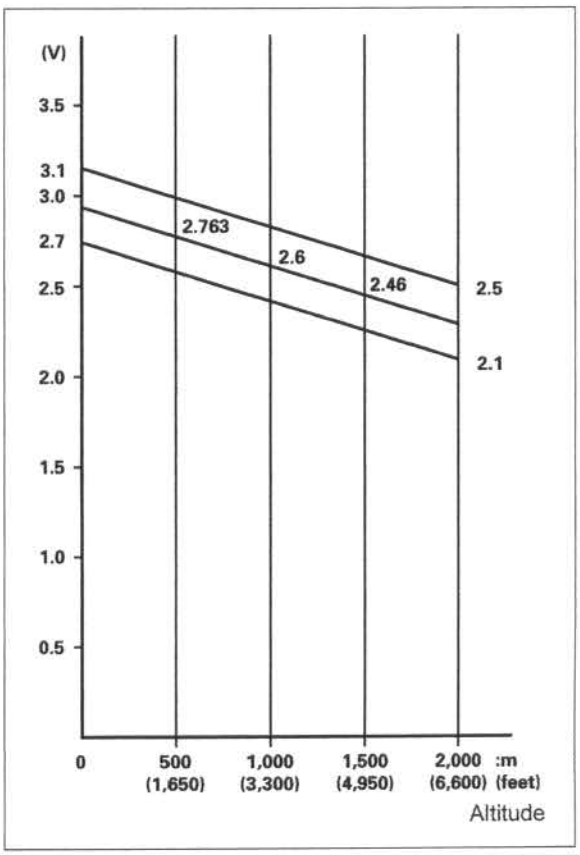

REMOVAL/INSTALLATION

Hang the fuel tank to the left side of the frame (page 4-6).

Disconnect the MAP sensor 3P (Black) connector.

Remove the screw, stay and MAP sensor from the throttle body.

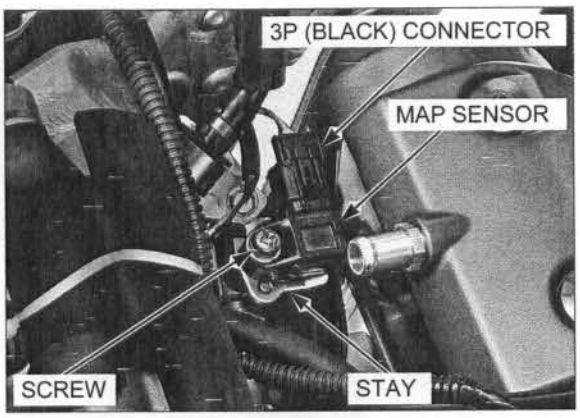

Disconnect the MAP sensor vacuum hose from the MAP sensor.

Connect the MAP sensor vacuum hose to the MAP sensor.

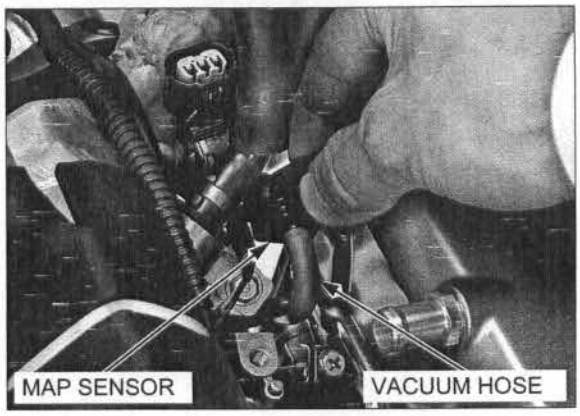

Set the stay to the MAP sensor as shown.

Install the MAP sensor/stay by aligning the stay hole with the tab of the throttle body.

Install and tighten the screw to the specified torque.

TORQUE: 4.9 N·m (0.5 kgf·m, 3.6 lbf·ft)

Connect the MAP sensor 3P (Black) connector.

Install the fuel tank (page 4-6).

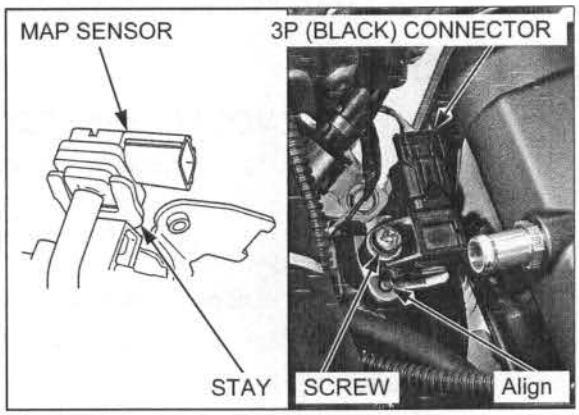

IAT SENSOR

REMOVAL/INSTALLATION

Remove the left side cover (page 3-3).

Disconnect the IAT sensor 2P (Gray) connector.

Remove the screws, IAT sensor and O-ring.

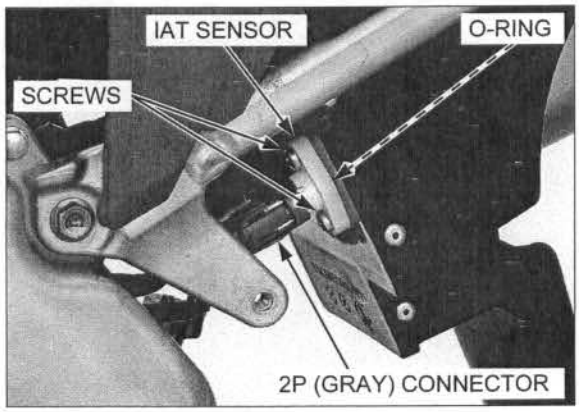

Apply engine oil to a new O-ring and install it to the IAT sensor.
Install the IAT sensor and screws.
Tighten the screws to the specified torque.

TORQUE: 1.1 N·m (0.1 kgf·m, 0.8 lbf·ft)

Connect the IAT sensor 2P (Gray) connector.

Install the left side cover (page 3-3).

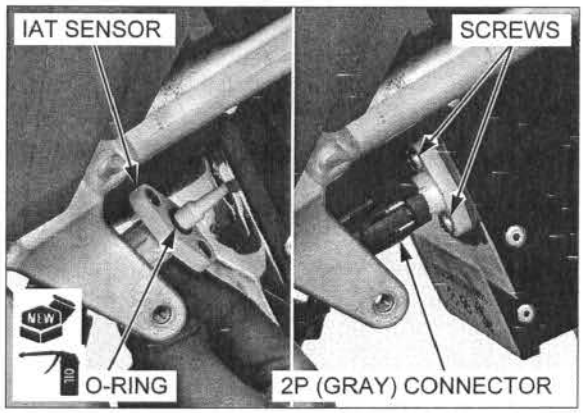

ECT SENSOR

INSPECTION

Drain the coolant from the system (page 7-7).
Remove the ECT sensor (page 6-57).

Heat the coolant (1:1 mixture) with an electric heating element.
Suspend the ECT sensor in heated coolant and measure the resistance through the sensor as the coolant heats up.

- Soak the ECT sensor in coolant up to its threads with at least 40 mm (1.6 in) from the bottom of the pan to the bottom of the sensor.
- Keep temperature constant for 3 minutes before testing. A sudden change of temperature will result in incorrect readings. Do not let the thermometer or ECT sensor touch the pan.

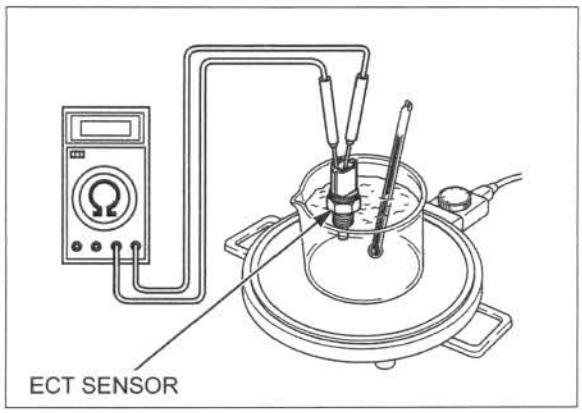

Replace the ECT sensor if it is out of specifications.
Install the ECT sensor (page 6-58).

Temperature	40°C (104°F)	100°C (212°F)
Resistance	1.0 – 1.3 kΩ	0.14 – 0.17 kΩ

REMOVAL

Drain the coolant (page 7-7).

Remove the exhaust system (page 3-8).

Disconnect the ECT sensor 2P (Black) connector.

Remove the ECT sensor and O-ring.

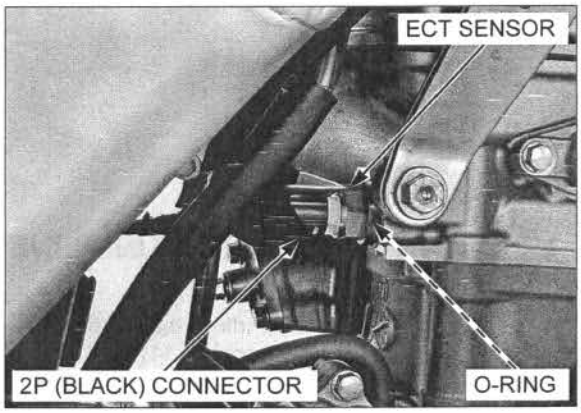

INSTALLATION

Install a new O-ring onto the ECT sensor.
Install and tighten the ECT sensor to the specified torque.

TORQUE: 12 N·m (1.2 kgf·m, 9 lbf·ft)

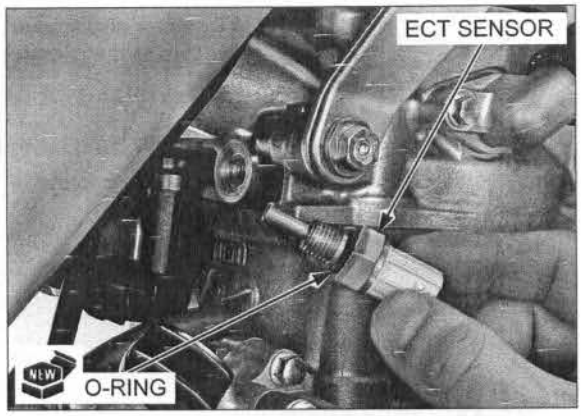

Connect the ECT sensor 2P (Black) connector.

Install the exhaust system (page 3-8).

Fill and bleed the cooling system (page 7-7).

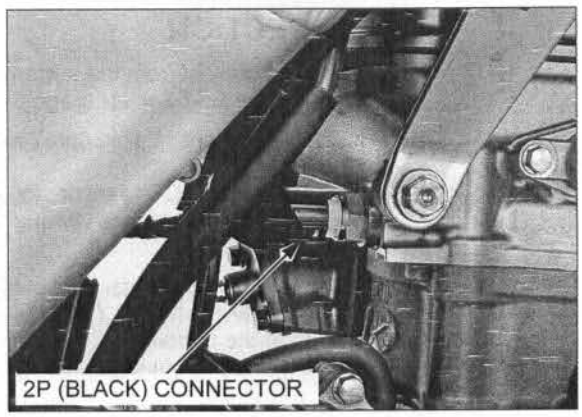

ECM

REMOVAL/INSTALLATION

Hang the fuel tank to the left side of the frame (page 4-6).

Disconnect the ECM 33P (Black) connector.

Remove the ECM from the ECM stay.

Installation is in the reverse order of removal.

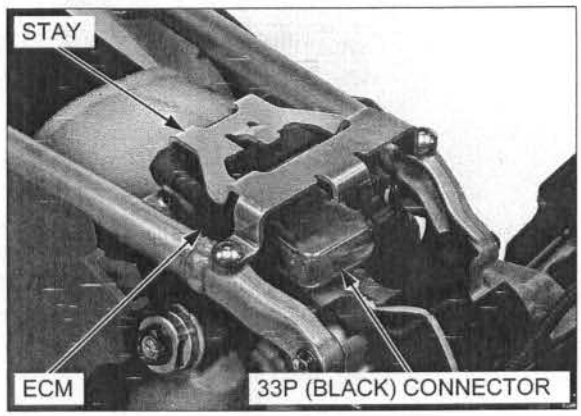

POWER/GROUND LINE INSPECTION

NOTE:
Before starting the inspection, check the regulator/rectifier (page 17-11).

ENGINE DOES NOT START (MIL DOES NOT BLINK)

1. **Engine Stop Switch Inspection**

   Inspect the engine stop switch (page 17-17).

   Does the engine stop switch operate normally?

   YES – GO TO STEP 2.

   NO – Faulty engine stop switch

2. ECM Power Input Line Inspection

Disconnect the ECM 33P (Black) connector (page 6-58).

Check for continuity at the ECM 33P (Black) connector terminals and ground.

Connection: 23 – Ground

TOOL:
Test probe **07ZAJ-RDJA110**

Is there continuity?

YES – Short circuit in Black wire

NO – GO TO STEP 3.

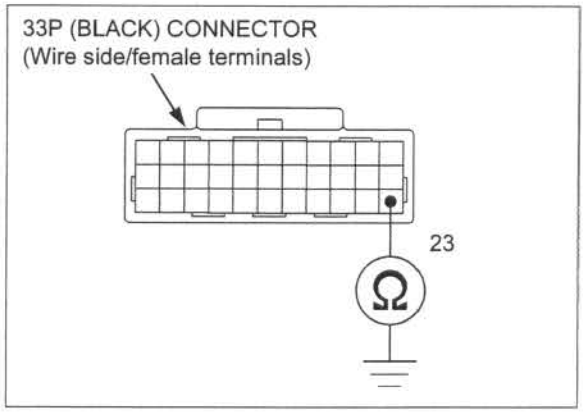

3. ECM Ground Line Inspection

Check for continuity between the ECM 33P (Black) connector terminals and ground.

Connection: 2 – Ground
6 – Ground
12 – Ground

TOOL:
Test probe **07ZAJ-RDJA110**

Is there continuity?

YES – Replace the ECM with a known good one, and recheck.

NO – Open circuit in Ground line

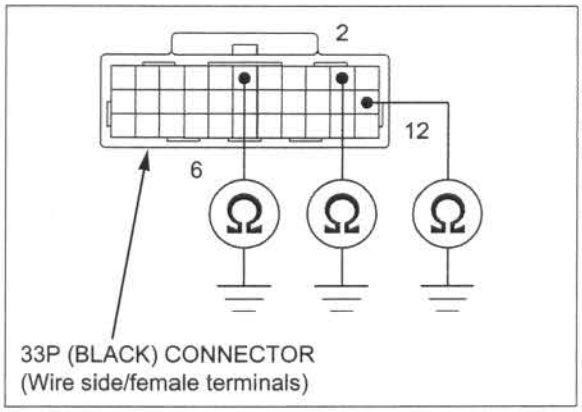

MEMO

7. COOLING SYSTEM

SYSTEM FLOW PATTERN

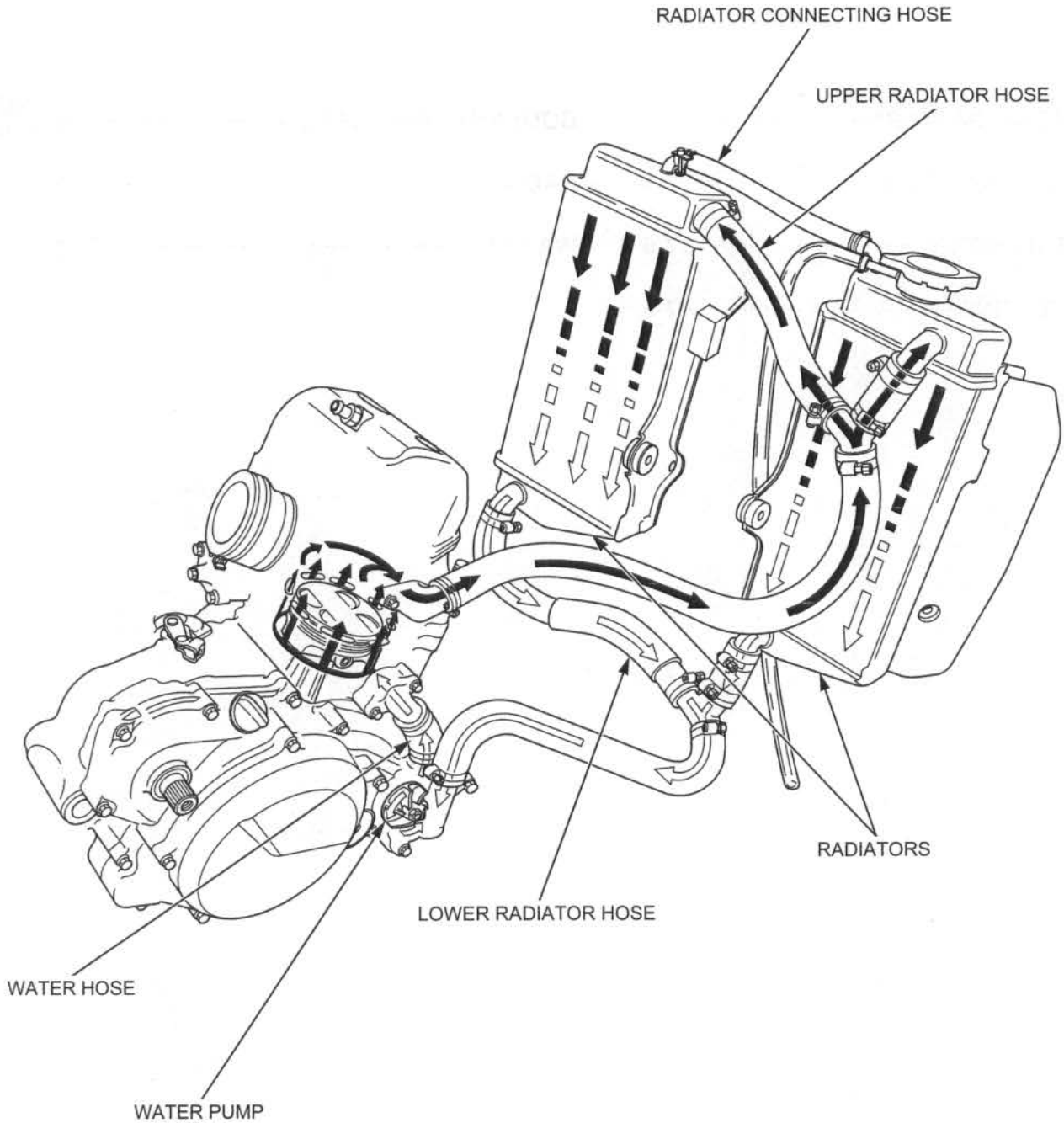

SERVICE INFORMATION

GENERAL

⚠WARNING

Removing the radiator cap while the engine is hot can allow the coolant to spray out, seriously scalding you.
Always let the engine and radiator cool down before removing the radiator cap.

NOTICE

Using coolant with silicate inhibitors may cause premature wear of mechanical seal or blockage of radiator passages. Using tap water may cause engine damage.

- Do not remove the radiator cap except to refill or drain the system.
- All cooling system services can be done with the engine installed in the frame.
- After servicing the system, check for leaks with a cooling system tester.

SPECIFICATIONS

ITEM		SPECIFICATIONS
Coolant capacity	At change	1.04 liter (1.10 US qt, 0.92 Imp qt)
	At disassembly	1.06 liter (1.12 US qt, 0.93 Imp qt)
Radiator cap relief pressure		108 – 137 kPa (1.1 – 1.4 kgf/cm^2, 16 – 20 psi)
Recommended antifreeze		Pro Honda HP Coolant or an equivalent high quality ethylene glycol antifreeze containing silicate-free corrosion inhibitors (1:1 mixture with distilled water)

TORQUE VALUES

Water pump impeller	12 N·m (1.2 kgf·m, 9 lbf·ft)
Radiator hose band screw	See page 7-11
Radiator connecting hose band screw	See page 7-11

TOOLS

Attachment, 32 x 35 mm 07746-0010100 	Bearing remover set, 12 mm 07936-1660101 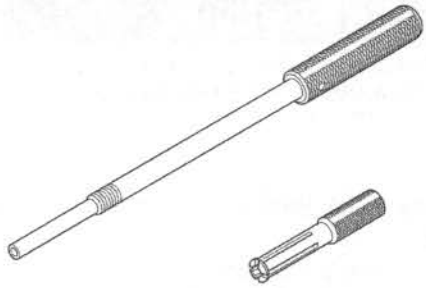 not available in U.S.A.	Remover weight 07741-0010201 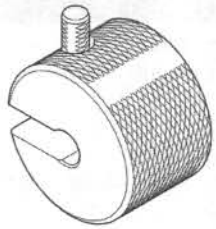 or 07936-371020A (U.S.A. only)
Remover head, 12 mm 07936-1660110 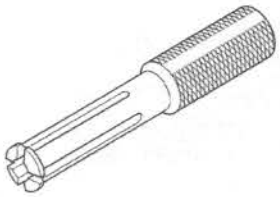 not available in U.S.A.	Remover shaft 07936-1660120 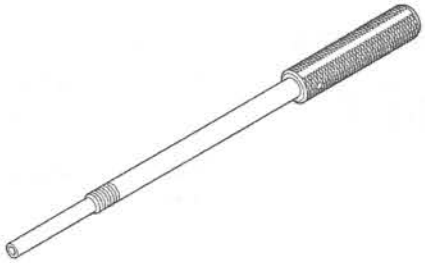 not available in U.S.A.	Remover handle 07936-3710100 (U.S.A. only) 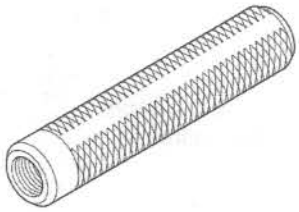
Driver 07749-0010000 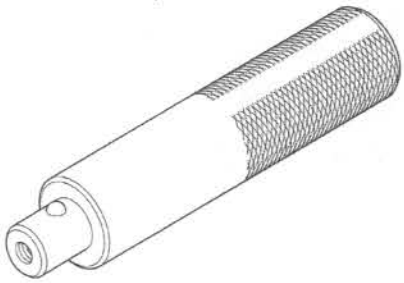	Installer collar 070MF-MEN0210 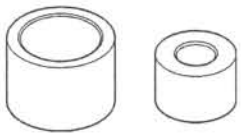 or 070MF-MENA210 (U.S.A. only)	Installer base 070MF-MEN0220 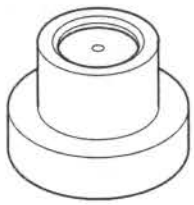 or 070MF-MENA220 (U.S.A. only)
Mechanical seal installer set 070MF-MEN0200 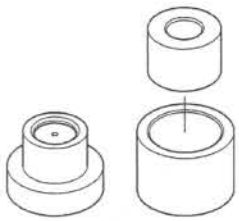 or 070MF-MENA200 (U.S.A. only)	Bearing remover, 12 mm 07936-166010A (U.S.A. only) 	Pilot, 12 mm 07746-0040200 

Attachment, 22 x 24 mm
07746-0010800

TROUBLESHOOTING

Engine temperature too high
- Faulty radiator cap
- Insufficient coolant
- Passage blocked in radiator, hoses or water jacket
- Radiator air passage clogged with dirt
- Air in system
- Faulty water pump
- Bend or wear water pump shaft
- Damaged water pump shaft needle bearings

Coolant leak
- Faulty oil seal and mechanical seal
- Deteriorated oil seal and mechanical seal
- Damaged or deteriorated O-ring
- Loose hose connection or clamp
- Damaged or deteriorated hose
- Faulty radiator cap
- Damaged radiator

SYSTEM TESTING

COOLANT (HYDROMETER TEST)

Make sure the engine is cool, remove the radiator cap.

⚠WARNING

Removing the radiator cap while the engine is hot can cause the coolant to spray out, seriously scalding you. Always let the engine and radiator cool down before removing the radiator cap.

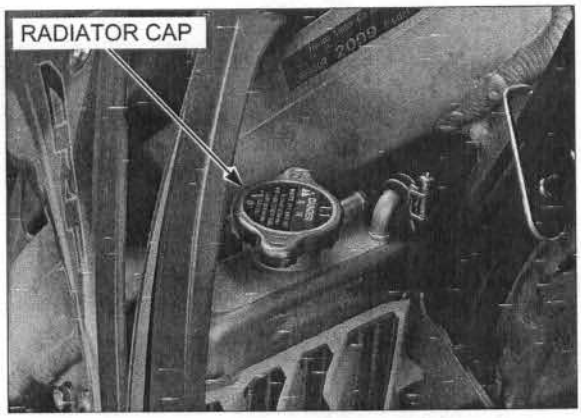

Test the coolant specific gravity using a hydrometer (see below for "COOLANT GRAVITY CHART").

For maximum corrosion protection, a 1:1 solution of ethylene glycol and distilled water is recommended (page 7-7).

STANDARD COOLANT CONCENTRATION: 1:1

Look for contamination and replace the coolant if necessary.

After checking the gravity, install the radiator cap securely.

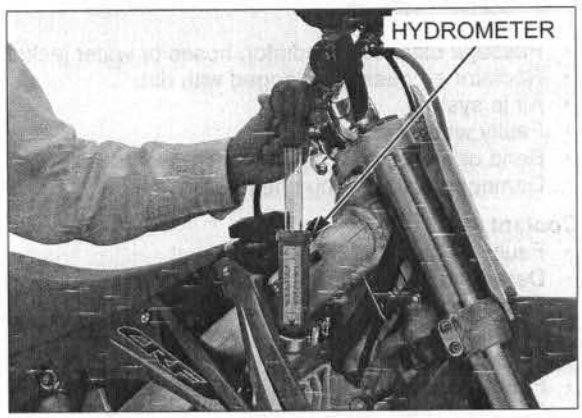

COOLANT GRAVITY CHART

		Coolant temperature °C (°F)										
		0 (32)	5 (41)	10 (50)	15 (59)	20 (68)	25 (77)	30 (86)	35 (95)	40 (104)	45 (113)	50 (122)
Coolant ratio%	5	1.009	1.009	1.008	1.008	1.007	1.006	1.005	1.003	1.001	0.999	0.997
	10	1.018	1.017	1.017	1.016	1.015	1.014	1.013	1.011	1.009	1.007	1.005
	15	1.028	1.027	1.026	1.025	1.024	1.022	1.020	1.018	1.016	1.014	1.012
	20	1.036	1.035	1.034	1.033	1.031	1.029	1.027	1.025	1.023	1.021	1.019
	25	1.045	1.044	1.043	1.042	1.040	1.038	1.036	1.034	1.031	1.028	1.025
	30	1.053	1.052	1.051	1.049	1.047	1.045	1.043	1.041	1.038	1.035	1.032
	35	1.063	1.062	1.060	1.058	1.056	1.054	1.052	1.049	1.046	1.043	1.040
	40	1.072	1.070	1.068	1.066	1.064	1.062	1.059	1.056	1.053	1.050	1.047
	45	1.080	1.078	1.076	1.074	1.072	1.069	1.066	1.063	1.060	1.057	1.054
	50	1.086	1.084	1.082	1.080	1.077	1.074	1.071	1.068	1.065	1.062	1.059
	55	1.095	1.093	1.091	1.088	1.085	1.082	1.079	1.076	1.073	1.070	1.067
	60	1.100	1.098	1.095	1.092	1.089	1.086	1.083	1.080	1.077	1.074	1.071

RADIATOR CAP/SYSTEM PRESSURE INSPECTION

Remove the radiator cap (page 7-6).

Wet the sealing surface with water.

Install the radiator cap on the tester.

Pressure test the radiator cap.
Replace the radiator cap if it does not hold pressure, or if the relief pressure is too high or too low.
It must hold the specified pressure for at least 6 seconds.

RADIATOR CAP RELIEF PRESSURE:
108 – 137 kPa (1.1 – 1.4 kgf/cm², 16 – 20 psi)

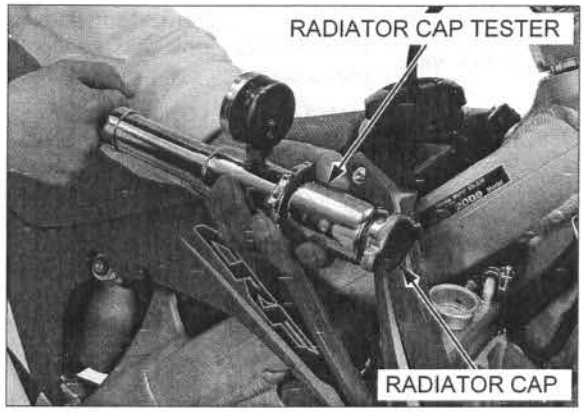

Pressurize the radiator, engine and hoses, and check for leaks.

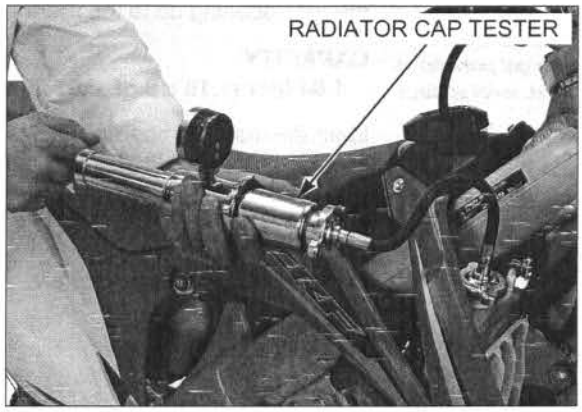

NOTICE

Excessive pressure can damage the cooling system components. Do not exceed 137 kPa (1.4 kgf/cm², 20 psi).

Repair or replace components if the system will not hold the specified pressure for at least 6 seconds.

After checking the pressure, install the radiator cap securely.

COOLANT REPLACEMENT

PREPARATION

- The effectiveness of coolant decreases with the accumulation of rust or if there is a change in the mixing proportion during usage. Therefore, for best performance, change the coolant regularly as specified in the maintenance schedule.
- Mix only distilled, low mineral water with the antifreeze.

RECOMMENDED ANTIFREEZE:
Pro Honda HP Coolant or an equivalent high quality ethylene glycol antifreeze containing silicate-free corrosion inhibitors

RECOMMENDED MIXTURE:
1:1 Mixture with distilled water

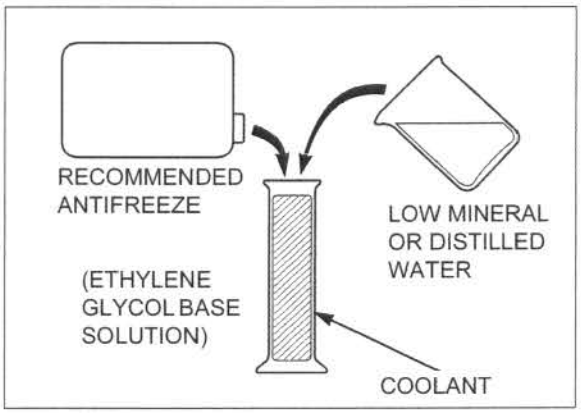

REPLACEMENT/AIR BLEEDING

Support the motorcycle in an upright position on a level surface.

Remove the radiator cap (page 7-6).

Drain the coolant from the system, removing the coolant drain bolt and sealing washer on the water pump cover.

Install the drain bolt with a new sealing washer.
Tighten the drain bolt securely.

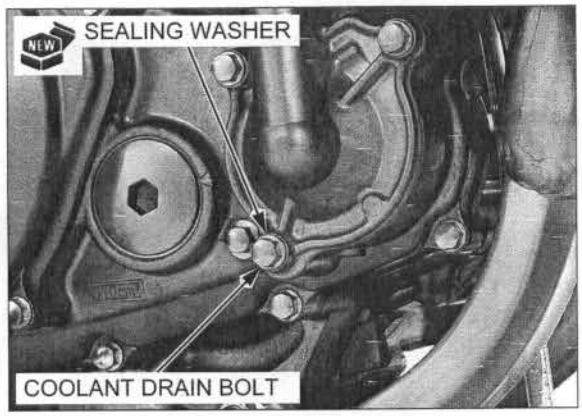

⚠ WARNING

Removing the radiator cap while the engine is hot can cause the coolant to spray out, seriously scalding you. Always let the engine and radiator cool down before removing the radiator cap.

When filling the system, place the motorcycle in an upright position on a flat, level surface.

Fill the system with the recommended coolant through the filler opening up to the filler neck.

CAPACITY:
1.04 liter (1.10 US qt, 0.92 Imp qt) at change

Lean the machine approximately 20° to the right and left several times to bleed any air trapped in the cooling system.
If the coolant level drops, add more coolant and repeat the air bleeding procedure.

Install the radiator cap securely.

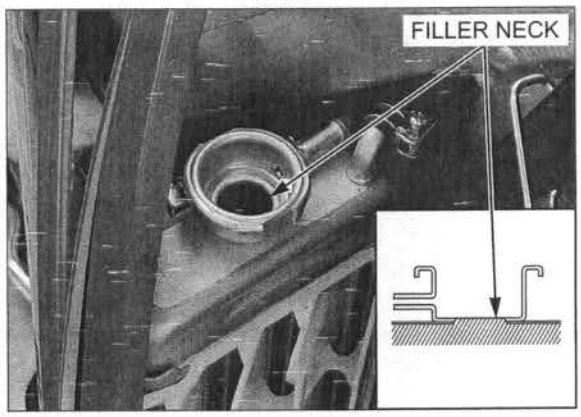

RADIATOR

REMOVAL

Drain the coolant (page 7-8).
Remove the radiator shrouds (page 3-4).

Be careful not to damage the radiator core.

Remove the radiator grills.

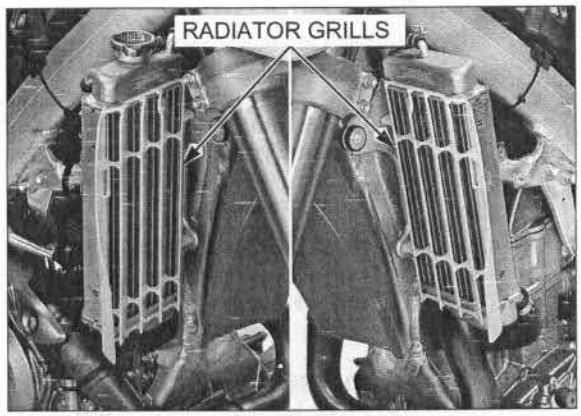

Note the direction of the hose clamp. Be careful not to damage the radiator core.

Disconnect the following from the right side radiator:

- Overflow hose
- Connecting hose
- Right side upper radiator hose (radiator-to-3-way joint)
- Left side upper radiator hose (radiator-to-3-way joint)

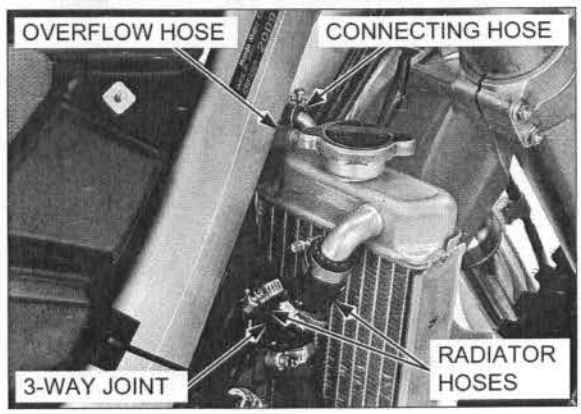

Disconnect the right side lower radiator hose from the radiator.

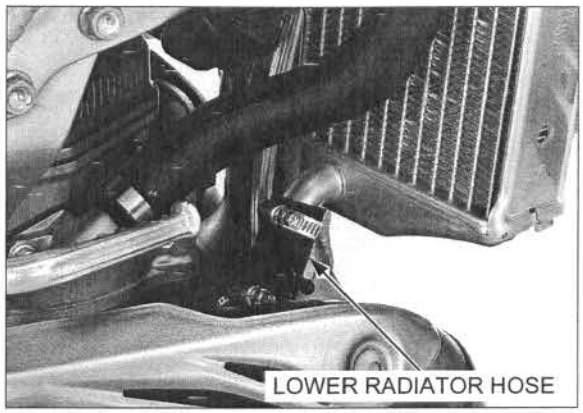

Remove the bolt and connector stay boss from the right side radiator lower mount.

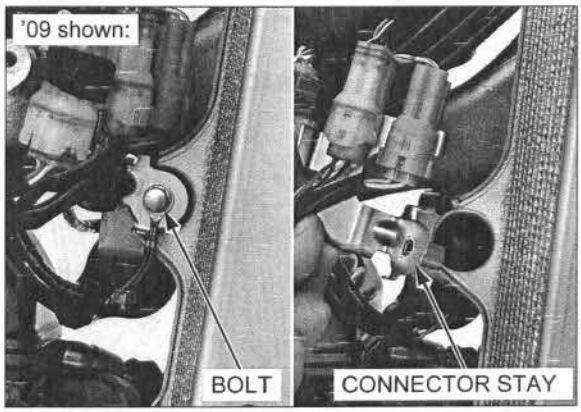

Remove the right side radiator upper mounting bolt, washer and then remove the right side radiator.

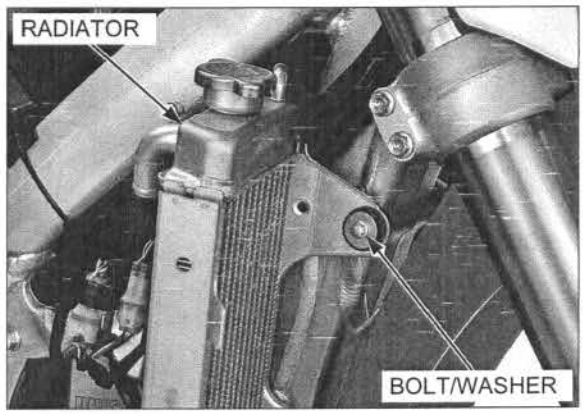

Disconnect the left side lower radiator hose from the radiator.

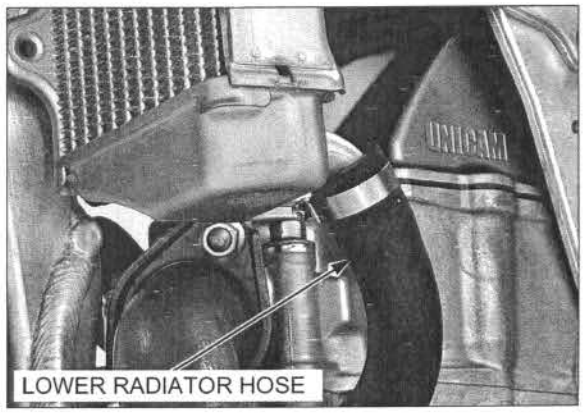

Remove the left side radiator mounting bolts, washers and left side radiator.

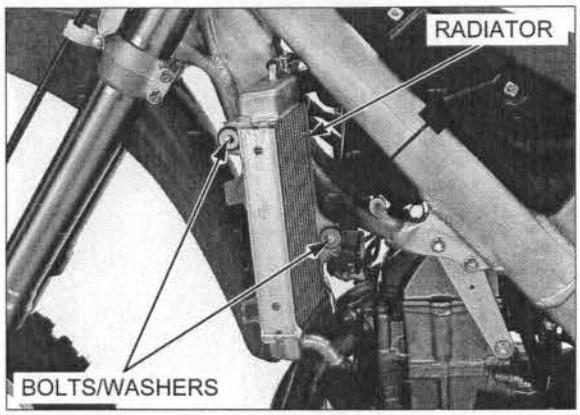

INSTALLATION

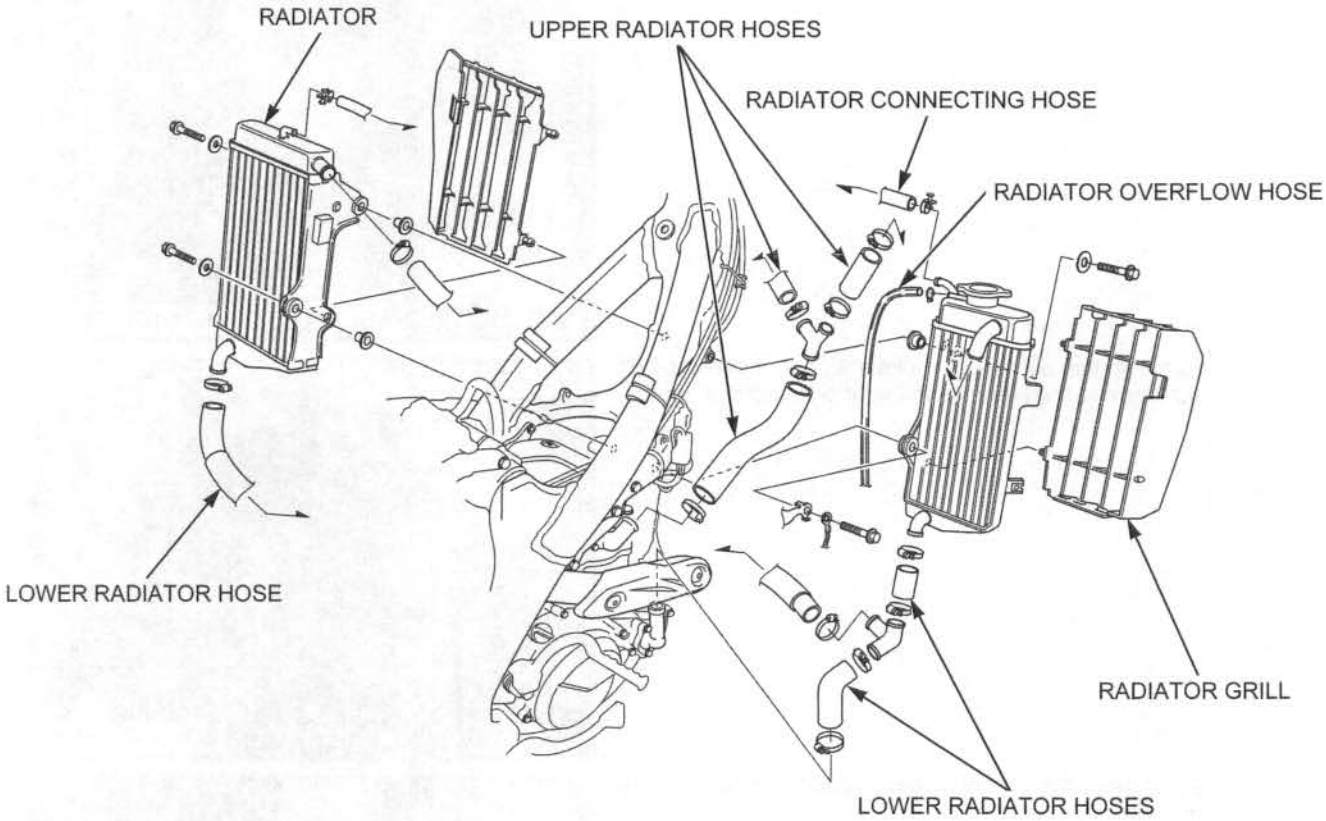

Route the wires and hoses properly (page 1-19).

Installation is in the reverse order of removal.

Tighten the radiator hose band and connecting hose band screws as shown.

Fill the radiator with the recommended coolant mixture to the filler neck and bleed the air (page 7-8).

After installation, check the radiator and radiator hoses for leaks.

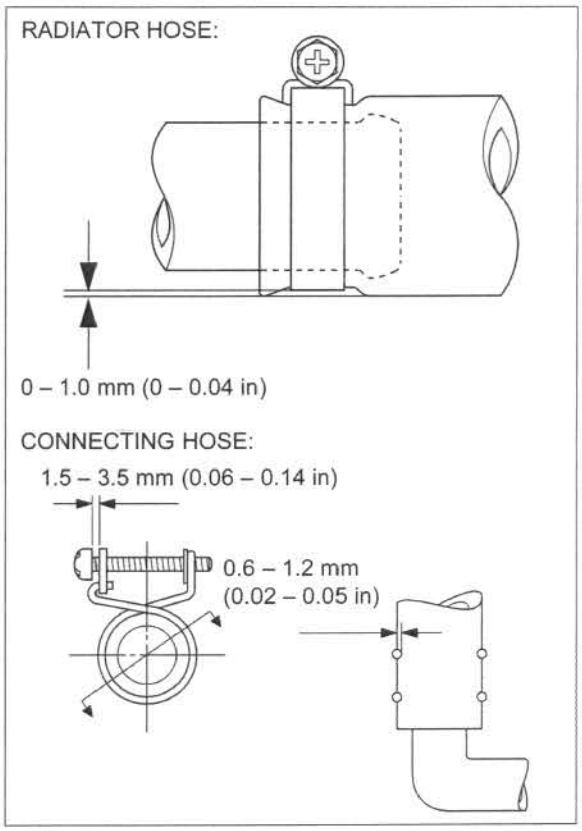

WATER PUMP

MECHANICAL SEAL INSPECTION

Check the bleed hole of the water pump for signs of coolant leakage.

If water leaks through the bleed hole, replace the mechanical seal (page 7-12).
If oil leaks through the bleed hole, replace the oil seal (page 7-12)

- A small amount of weeping from the bleed hole is normal.
- Make sure that there is no continuous coolant leakage from the bleed hole while operating the engine.

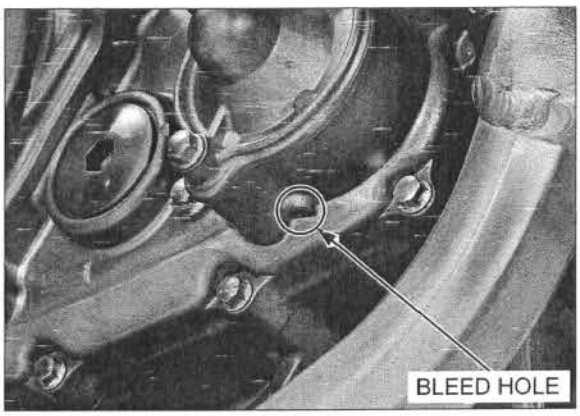

REMOVAL

Drain the coolant (page 7-8)

Remove the drain bolt, sealing washer.
Loosen the hose band screw and disconnect the lower radiator hose.
Remove the bolts and water pump cover.

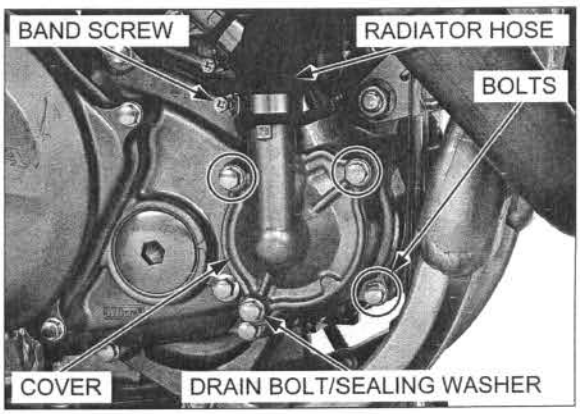

Remove the O-ring and dowel pins.
Loosen the impeller.

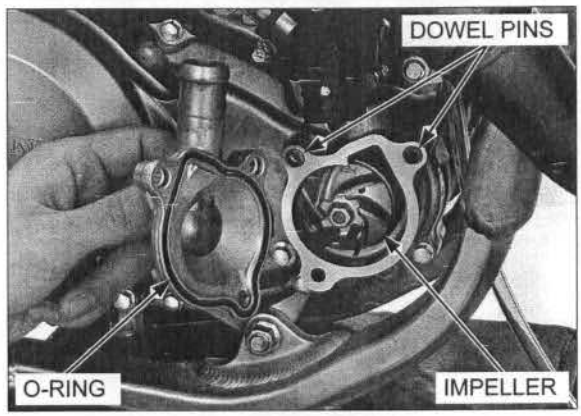

Remove the right crankcase cover (page 11-6).

Remove the impeller and plain washer.

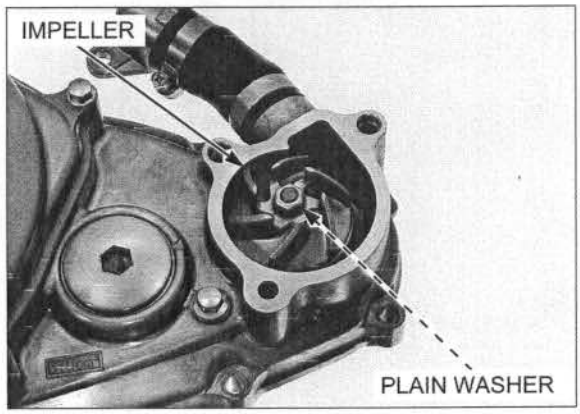

BEARING/MECHANICAL SEAL/OIL SEAL REPLACEMENT

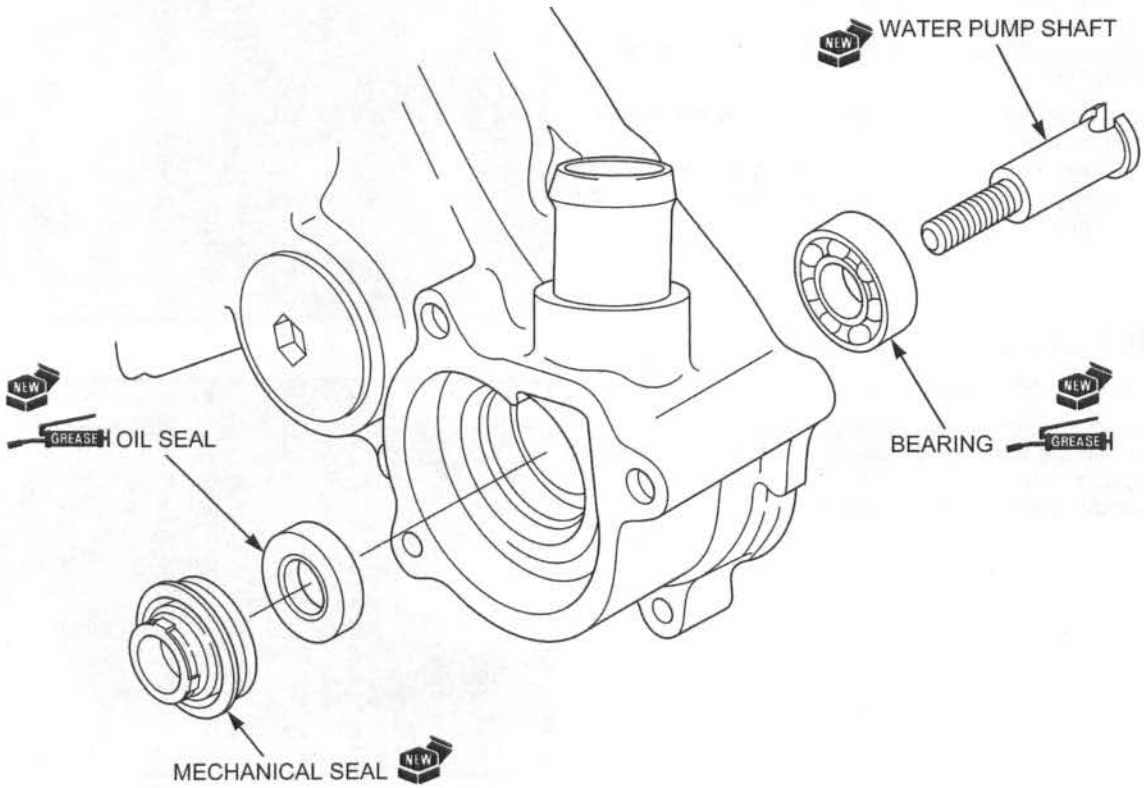

Press the water pump shaft out from the right crankcase cover.

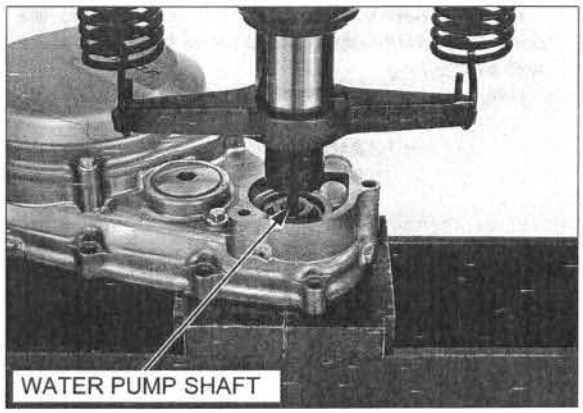

Remove the water pump shaft bearing using the special tools.

TOOLS:

Bearing remover set, 12 mm	**07936-1660101 not available in U.S.A.**
– Remover weight	**07741-0010201**
– Remover head, 12 mm	**07936-1660110 not available in U.S.A.**
– Remover shaft	**07936-1660120 not available in U.S.A.**

TOOLS, U.S.A. only:

Bearing remover, 12 mm	**07936-166010A**
Remover handle	**07936-3710100**
Remover weight	**07936-371020A**

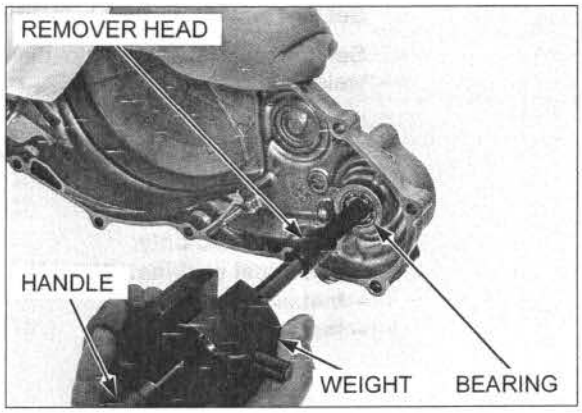

Remove the mechanical seal and oil seal from the right crankcase cover.

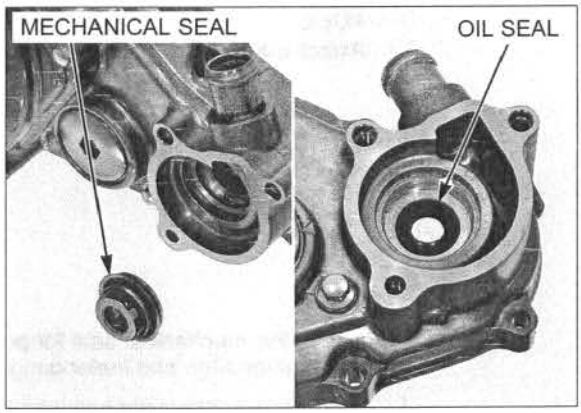

Apply grease to a new oil seal lips.

Install the oil seal into the right crankcase cover as shown.

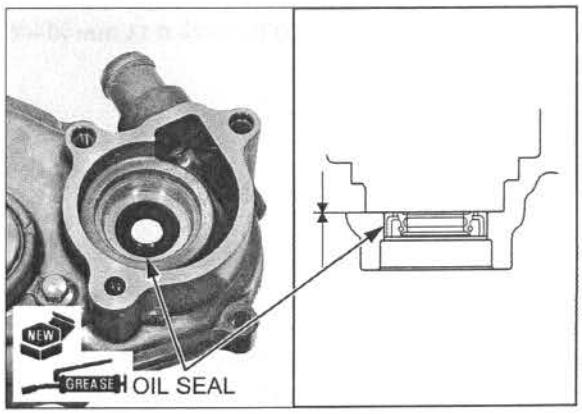

Drive in a new bearing squarely with the marking side facing up.

Drive in a new bearing into the right crankcase cover using the special tools as shown.

TOOLS:

Driver	**07749-0010000**
Attachment, 22 x 24 mm	**07746-0010800**
Pilot, 12mm	**07746-0040200**

After installing the bearing, lubricate it with engine oil.

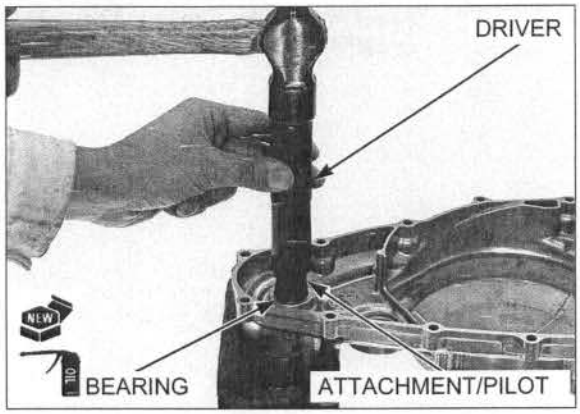

Set new water pump shaft and mechanical seal.

Set the special tools onto the mechanical seal and water pump shaft as shown.

TOOLS:

Mechanical seal installer set	**070MF-MEN0200**
– Installer collar	**070MF-MEN0210**
– Installer base	**070MF-MEN0220**
TOOLS, U.S.A. only:	
Mechanical seal installer set	**070MF-MENA200**
– Installer collar	**070MF-MENA210**
– Installer base	**070MF-MENA220**

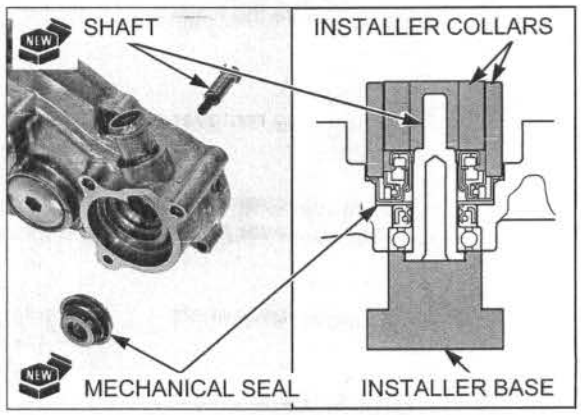

Press the mechanical seal until it is fully seated to the right crankcase cover using the hydraulic press and special tool.

TOOL:

Attachment, 32 x 35 mm	**07746-0010100**

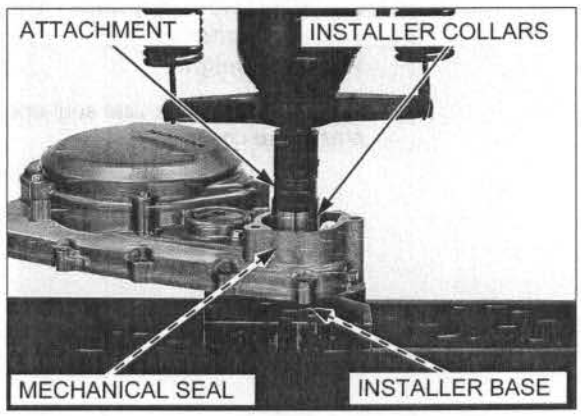

Check the mechanical seal for proper installation using the straight edge and feeler gauge.

Measure the clearance between the installer collars.

STANDARD: 0 – 0.15 mm (0 – 0.006 in)

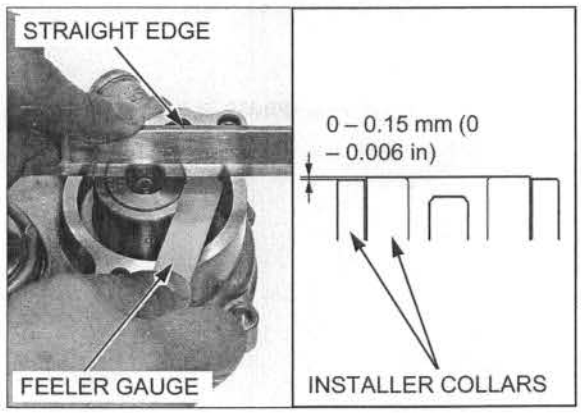

INSTALLATION

After installing the right crankcase cover, tighten the impeller.

Install the plain washer and impeller to the water pump shaft.

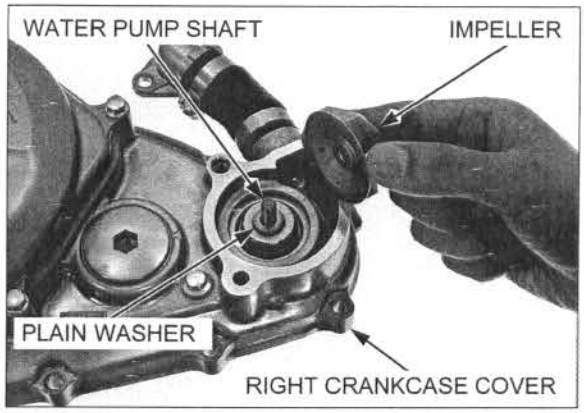

Install the right crankcase cover (page 11-7).

Tighten the water pump impeller to the specified torque.

TORQUE: 12 N·m (1.2 kgf·m, 9 lbf·ft)

Install the dowel pins.

Install a new O-ring to the water pump cover.

Install the water pump cover.

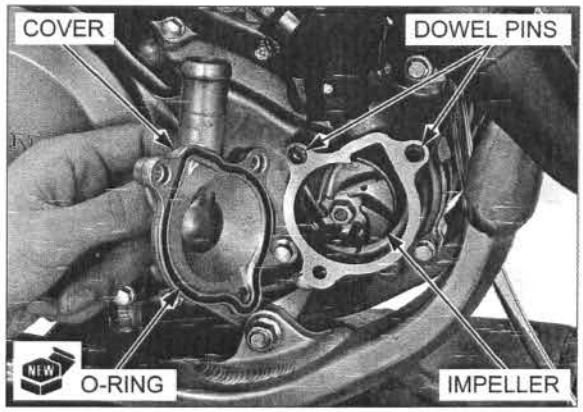

Install and tighten the bolts securely.

Install the coolant drain bolt with a new sealing washer. Tighten the coolant drain bolt securely.

Connect the lower radiator hose, and tighten the hose band screw securely (page 7-11).

Fill the radiator with the recommended coolant mixture to the filler neck and bleed the air (page 7-8).

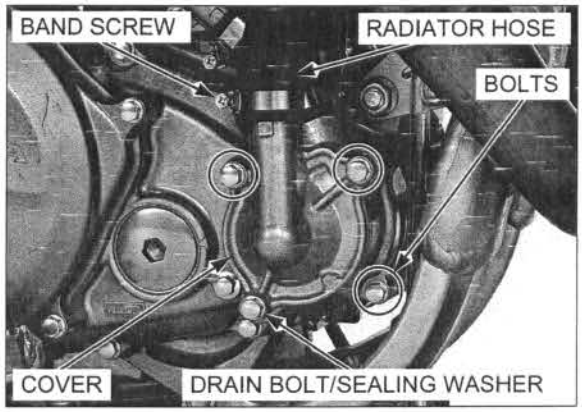

MEMO

8. ENGINE REMOVAL/INSTALLATION

COMPONENT LOCATION

'09 shown:

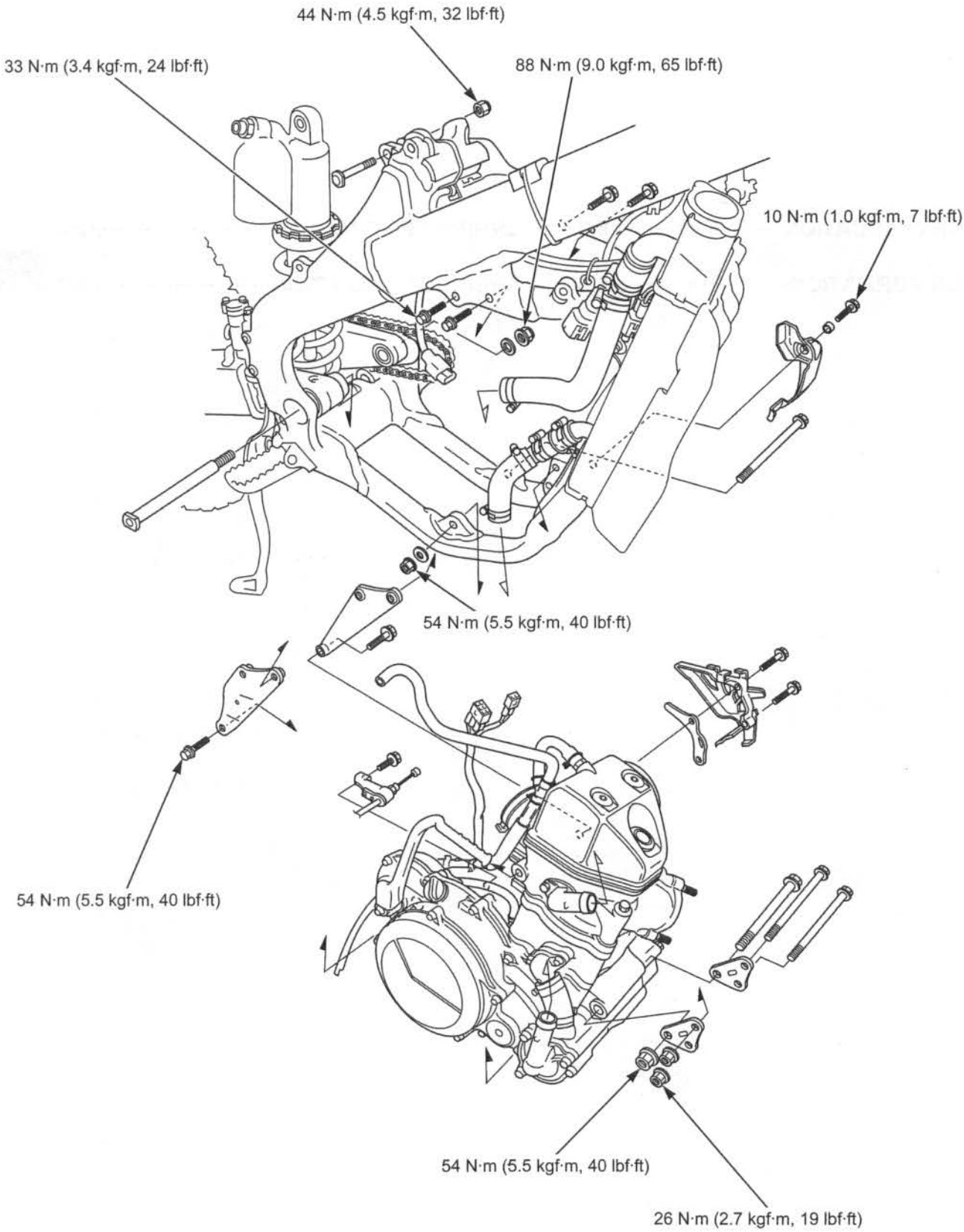

SERVICE INFORMATION

GENERAL

- When removing/installing the engine, tape the frame around the engine beforehand for frame protection.
- During engine removal and installation, support the motorcycle using a workstand or equivalent.
- The following components require engine removal for service.
  - Crankcase (page 13-10)/Crankshaft (page 13-21)/Transmission (page 13-15)
  - One-way valve (page 13-12)
  - Oil pump (page 5-5)
- The following components can be serviced with the engine installed in the frame.
  - Cylinder head (page 9-17)/Valves (page 9-20)
  - Cylinder (page 10-5)/Piston (page 10-6)
  - Clutch (page 11-9)/Kickstarter (page 11-17)/Gearshift linkage (page 11-21)
  - Throttle body (page 6-50)
  - Flywheel (page 12-5)
  - Water pump (page 7-11)
  - Balancer gear/Balancer (page 13-7)

SPECIFICATIONS

ITEM		SPECIFICATIONS
Engine dry weight		27.1 kg (59.7 lbs)
Recommended engine oil		Pro Honda GN4 4-stroke oil (U.S.A. and Canada) or equivalent motor oil API service classification: SG or Higher JASO T 903 standard: MA Viscosity: SAE 10W-30
Recommended transmission oil		Pro Honda GN4 4-stroke oil (U.S.A. and Canada) or equivalent motor oil API service classification: SG or Higher JASO T 903 standard: MA Viscosity: SAE 10W-30
Engine oil capacity	At draining	0.58 liter (0.61 US qt, 0.51 Imp qt)
	At oil and filter change	0.62 liter (0.66 US qt, 0.55 Imp qt)
	At disassembly	0.77 liter (0.81 US qt, 0.68 Imp qt)
Transmission oil capacity	At draining	0.59 liter (0.62 US qt, 0.52 Imp qt)
	At disassembly	0.67 liter (0.71 US qt, 0.59 Imp qt)
Coolant capacity	At change	1.04 liter (1.10 US qt, 0.92 Imp qt)
	At disassembly	1.06 liter (1.12 US qt, 0.93 Imp qt)

TORQUE VALUES

Cylinder head hanger bolt	54 N·m (5.5 kgf·m, 40 lbf·ft)	
Lower engine hanger nut	54 N·m (5.5 kgf·m, 40 lbf·ft)	
Front engine hanger nut	54 N·m (5.5 kgf·m, 40 lbf·ft)	
Front engine hanger plate nut	26 N·m (2.7 kgf·m, 19 lbf·ft)	
Cylinder head hanger plate bolt	33 N·m (3.4 kgf·m, 24 lbf·ft)	
Kickstarter pedal bolt	38 N·m (3.9 kgf·m, 28 lbf·ft)	
Swingarm pivot nut	88 N·m (9.0 kgf·m, 65 lbf·ft)	U-nut
Shock absorber upper mounting nut	44 N·m (4.5 kgf·m, 32 lbf·ft)	U-nut

ENGINE REMOVAL

Drain the engine oil (page 4-15).
Drain the transmission oil (page 4-18).
Drain the coolant (page 7-8).

Remove the following:

- Condenser (page 17-18)
- Engine guard (page 3-5)
- Fuel tank (page 6-46)
- Exhaust pipe (page 3-9)
- Throttle body (page 6-50)
- Kickstarter pedal (page 11-6)
- Gearshift pedal (page 11-21)
- Brake pedal pivot bolt (page 16-29)
- Ignition coil (page 17-13)
- Drive chain (page 4-20)

'09: Disconnect the alternator/CKP sensor 6P (Natural) and gear position switch 2P (Green) connectors.
Remove the wire band.

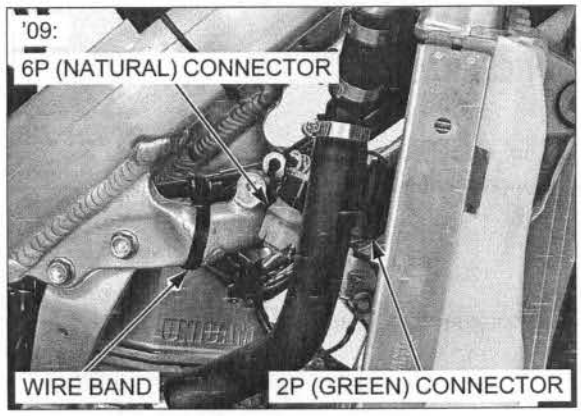

Remove the wire band and release the wire harnesses.

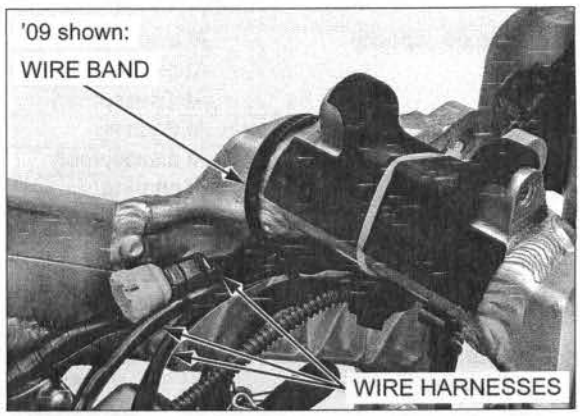

Disconnect the ECT sensor 2P (Black) connector.

'09: Remove the wire clamp.

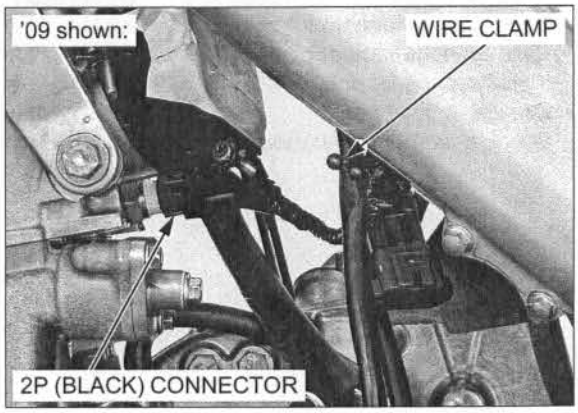

After '09: Disconnect the alternator/CKP sensor 6P (Black) connector.

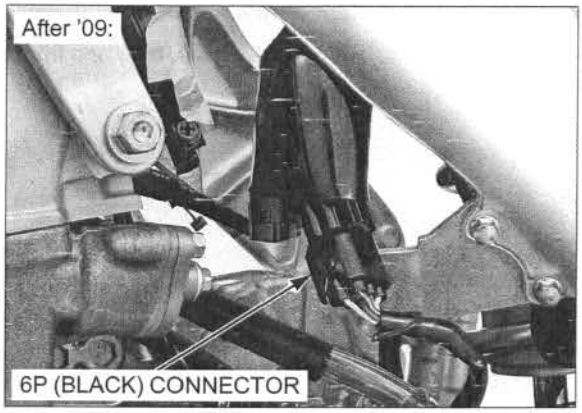

Remove the bolt and clutch cable stay, and disconnect the clutch cable from the clutch lifter lever.

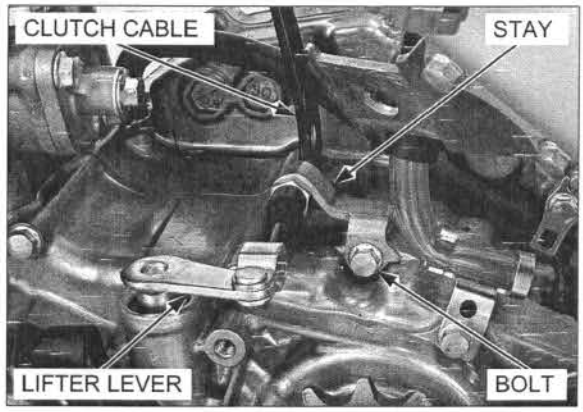

Loosen the hose band screws, and disconnect the lower radiator hose and upper radiator hose.

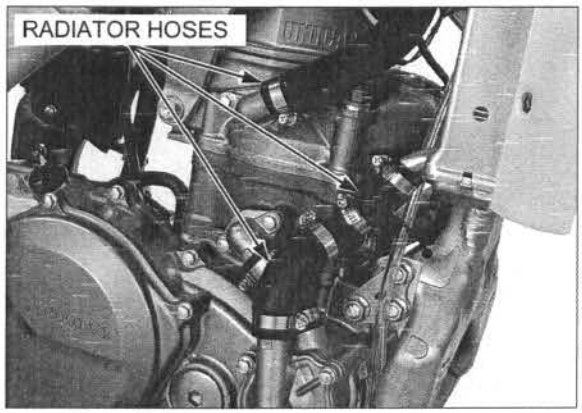

Remove the cylinder head hanger bolts.

Remove the bolts and cylinder head hanger plates.

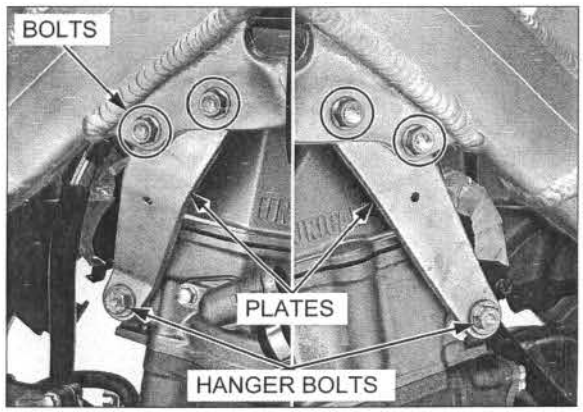

Remove the front engine hanger bolt and nut.

Remove the bolts, nuts and front engine hanger plates.

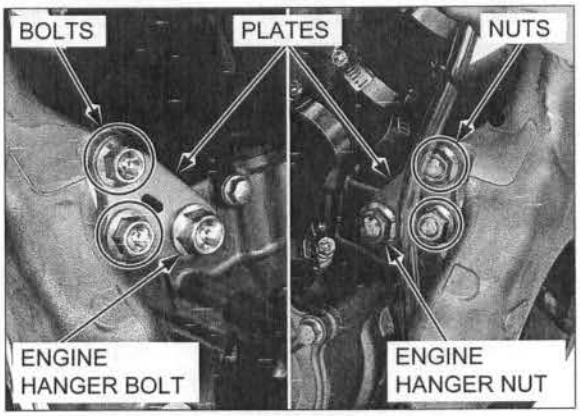

Remove the swingarm pivot nut, washer and bolt.

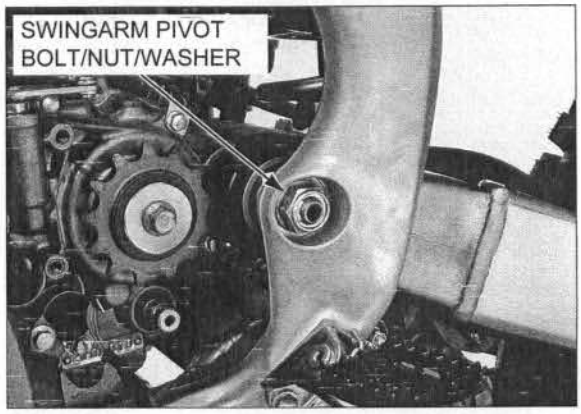

Remove the lower engine hanger bolt, nut and washer.

Remove the engine from the right side of the frame.

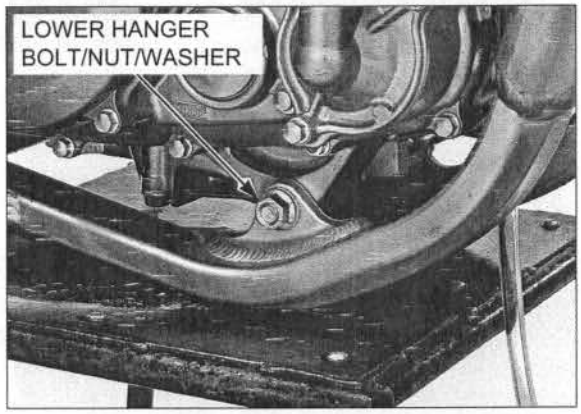

Note the direction of the engine hanger plates and mounting bolts.

Temporarily install the swingarm pivot bolt so the frame can be moved and stored safely.

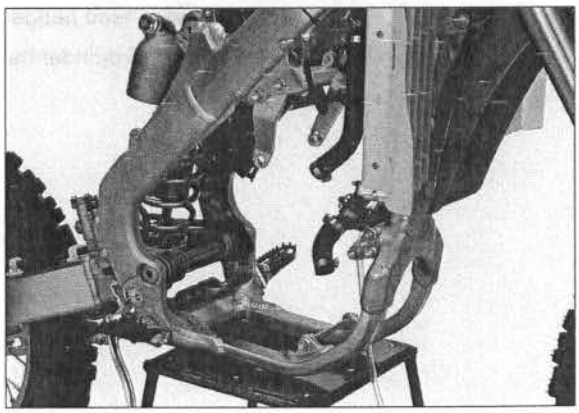

ENGINE INSTALLATION

NOTE:

- Install all the engine mounting fasteners loosely, then tighten the bolts and nuts to the specified torque.
- Route the wires, hoses and cables properly (page 1-19)

Carefully align the mounting points to prevent damage to engine, frame, wire and cables.

Set the engine into the frame in the reverse order of removal.
Loosely install the lower engine hanger bolt, washer and nut.

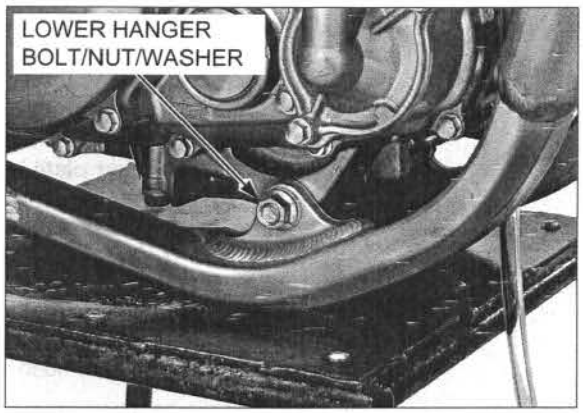

Apply thin coat of grease to the swingarm pivot bolt sliding surface.
Loosely install the swingarm pivot bolt, washer and nut.

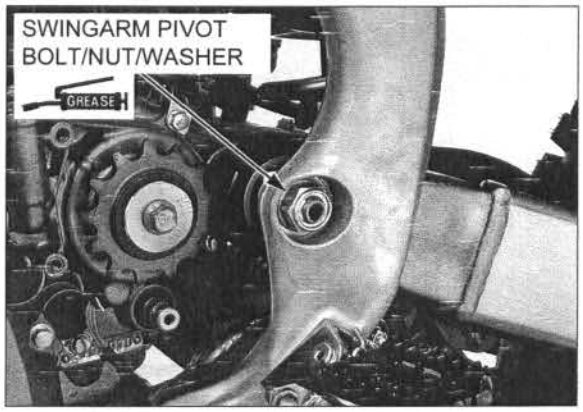

Loosely install the front engine hanger plates, bolts and nuts.

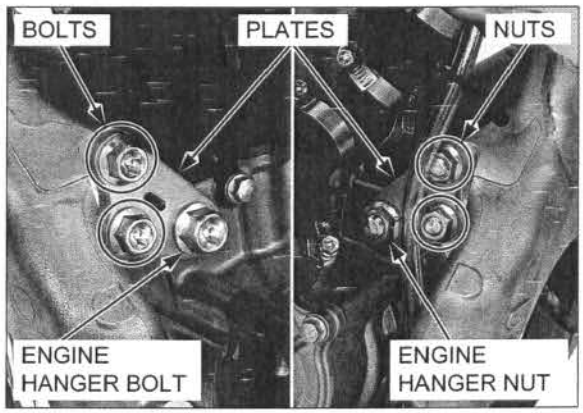

Install the cylinder head hanger plates and bolts.
Loosely install the cylinder head hanger bolts.
After installing all mounting fasteners, tighten the fasteners to the specified torque.

TORQUE:
Swingarm pivot nut:
88 N·m (9.0 kgf·m, 65 lbf·ft)
Front engine hanger nut:
54 N·m (5.5 kgf·m, 40 lbf·ft)
Lower engine hanger nut:
54 N·m (5.5 kgf·m, 40 lbf·ft)
Cylinder head hanger bolt:
54 N·m (5.5 kgf·m, 40 lbf·ft)
Cylinder head hanger plate bolt:
33 N·m (3.4 kgf·m, 24 lbf·ft)
Front engine hanger plate nut:
26 N·m (2.7 kgf·m, 19 lbf·ft)

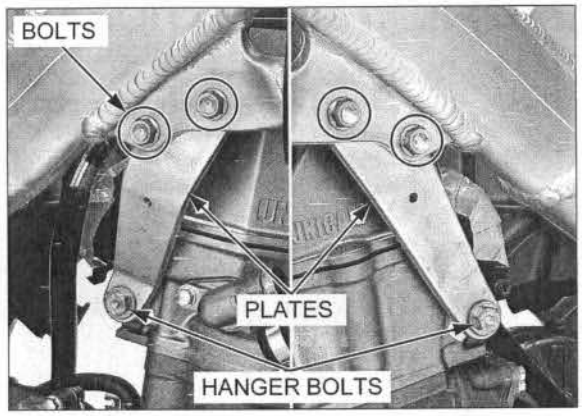

Connect the lower radiator hoses to the water pump cover.

Connect the upper radiator hose to the cylinder head.

Tighten the hose band screws securely (page 7-11).

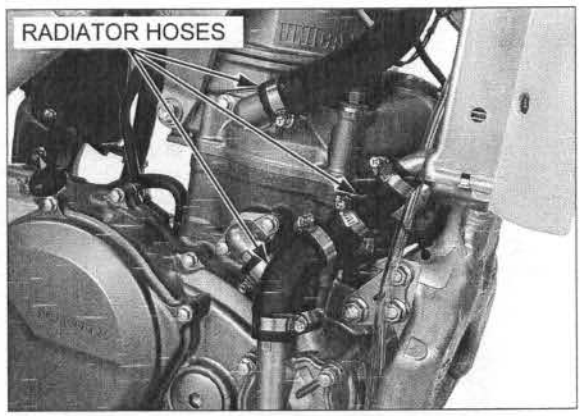

Connect the clutch cable to the clutch lifter lever.

Install the clutch cable stay and bolts.
Tighten the bolts securely.

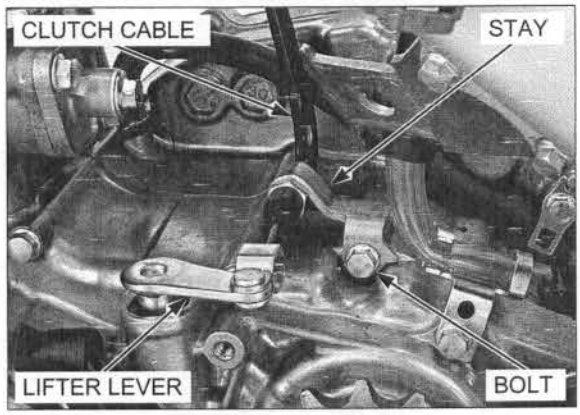

Connect the ECT sensor 2P (Black) connector.

'09: Install the wire clamp.

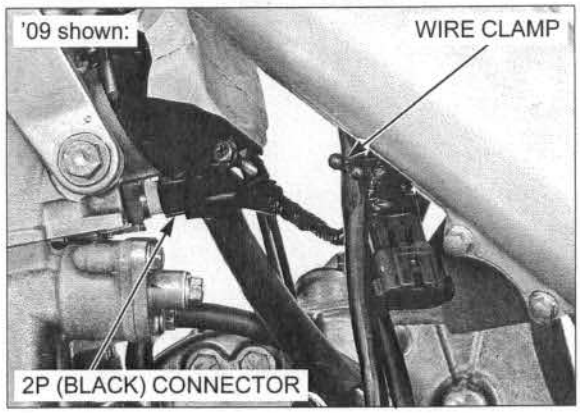

After '09 Connect the alternator/CKP sensor 6P (Black) connector.

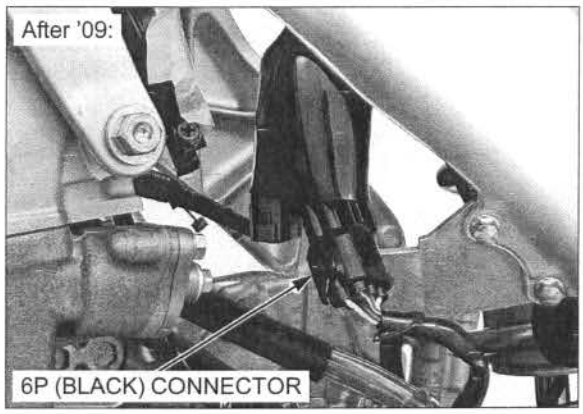

Install the wire band.

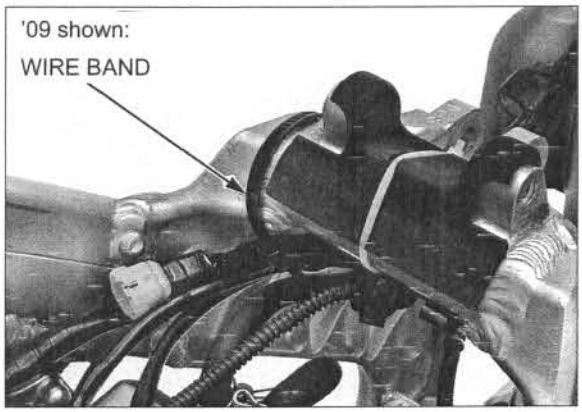

'09: Connect the alternator/CKP sensor 6P (Natural) and gear position switch 2P (Green) connectors.

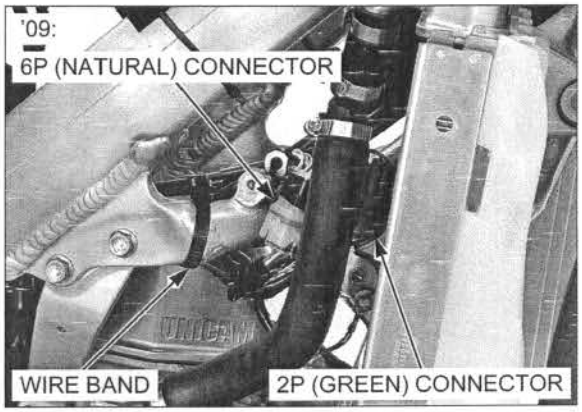

Install the wire band.

Install the following:

- Drive chain (page 4-20)
- Ignition coil (page 17-13)
- Brake pedal pivot bolt (page 16-30)
- Gearshift pedal (page 11-24)
- Kickstarter pedal (page 11-8)
- Throttle body (page 6-53)
- Exhaust pipe (page 3-10)
- Fuel tank (page 6-46)
- Engine guard (page 3-5)
- Condenser (page 17-18)

Fill the radiator with the recommended coolant mixture to the filler neck and bleed the air (page 7-8).
Fill the engine with the recommended oil (page 4-15).
Fill the transmission with the recommended oil (page 4-18).

After installing the engine, perform the following inspections and adjustments:

- Throttle grip freeplay (page 4-7)
- Drive chain slack (page 4-22)
- Clutch lever freeplay (page 4-27)

Check the exhaust system and cooling system for leaks.

MEMO

9. CYLINDER HEAD/VALVES

COMPONENT LOCATION

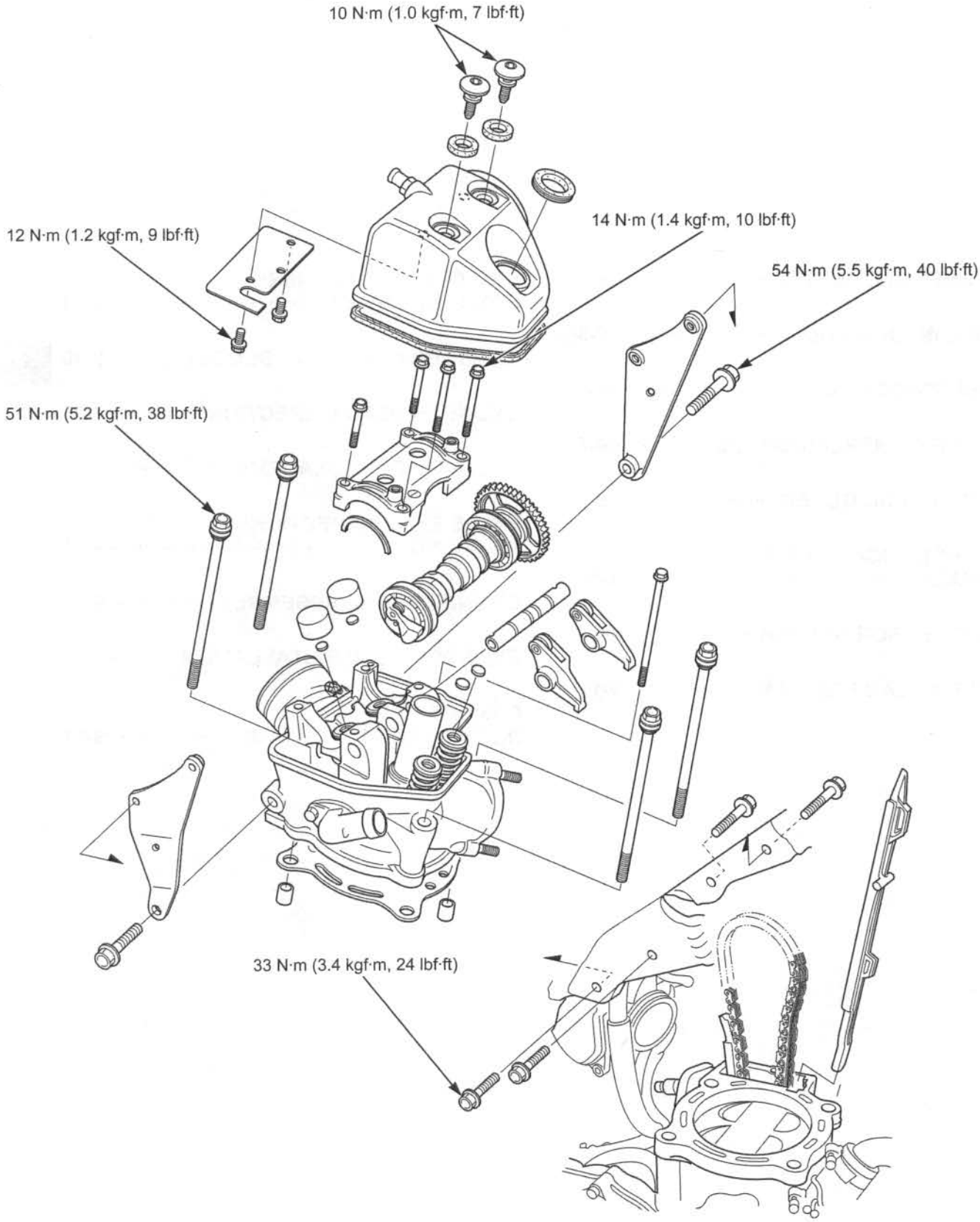

SERVICE INFORMATION

GENERAL

- This section covers service of the camshaft, cylinder head and valves. These services can be done with the engine installed in the frame.
- During disassembly, mark and store the disassembled parts to ensure that they are reinstalled in their original locations.
- Clean all disassembled parts with cleaning solvent and dry them by blowing them off with compressed air before inspection.
- Camshaft lubrication oil is fed through oil passages in the cylinder head and camshaft holder. Clean the oil passages before assembling them.
- Be careful not to damage the mating surfaces when removing the cylinder head cover and cylinder head.
- Replace the camshaft and decompressor system as an assembly.

SPECIFICATIONS

Unit: mm (in)

ITEM			STANDARD	SERVICE LIMIT
Cylinder compression			392 kPa (4.0 kgf/cm^2, 57 psi) at 600 rpm	–
Cylinder head warpage			–	0.05 (0.002)
Valve and valve guide	Valve clearance	IN	0.16 ± 0.03 (0.006 ± 0.001)	–
		EX	0.28 ± 0.03 (0.011 ± 0.001)	–
	Valve stem O.D.	IN	4.975 – 4.990 (0.1959 – 0.1965)	–
		EX	4.965 – 4.980 (0.1955 – 0.1961)	4.96 (0.195)
	Valve guide I.D.	IN	5.000 – 5.012 (0.1969 – 0.1973)	5.052 (0.1989)
		EX	5.000 – 5.012 (0.1969 – 0.1973)	5.052 (0.1989)
	Stem-to-guide clearance	IN	0.010 – 0.037 (0.0004 – 0.0015)	–
		EX	0.020 – 0.047 (0.0008 – 0.0019)	–
	Valve guide projection above cylinder head	IN	14.8 – 15.0 (0.58 – 0.59)	–
		EX	17.8 – 18.0 (0.70 – 0.71)	–
	Valve seat width	IN	1.1 – 1.3 (0.04 – 0.05)	2.0 (0.08)
		EX	1.3 – 1.5 (0.05 – 0.06)	2.0 (0.08)
Valve spring free length		IN	40.72 (1.603)	40.6 (1.60)
		EX	42.30 (1.665)	42.1 (1.66)
Rocker arm	Rocker arm I.D.		12.000 – 12.018 (0.4724 – 0.4731)	12.025 (0.4734)
	Rocker arm shaft O.D.		11.977 – 11.985 (0.4715 – 0.4718)	11.97 (0.471)
	Rocker arm-to-shaft clearance		0.015 – 0.041 (0.0006 – 0.0016)	0.055 (0.0022)
Camshaft	Cam lobe height	IN	37.540 – 37.780 (1.4779 – 1.4874)	37.52 (1.477)
		EX	28.598 – 28.838 (1.1259 – 1.1354)	28.58 (1.125)
Valve lifter O.D.			25.978 – 25.993 (1.0228 – 1.0233)	25.97 (1.022)
Valve lifter bore I.D.			26.010 – 26.026 (1.0240 – 1.0246)	26.04 (1.025)

TORQUE VALUES

Breather plate bolt	12 N·m (1.2 kgf·m, 9 lbf·ft)	Apply locking agent to the threads (page 9-8).
Cylinder head cover bolt	10 N·m (1.0 kgf·m, 7 lbf·ft)	
Camshaft holder mounting bolt	14 N·m (1.4 kgf·m, 10 lbf·ft)	Apply engine oil to the threads.
Cylinder head bolt	51 N·m (5.2 kgf·m, 38 lbf·ft)	Apply engine oil to the threads and seating surface.
Cam chain tensioner bolt	12 N·m (1.2 kgf·m, 9 lbf·ft)	Apply locking agent to the threads (page 9-19).
Crankshaft hole cap	15 N·m (1.5 kgf·m, 11 lbf·ft)	Apply grease to the threads.
Cylinder head hanger bolt	54 N·m (5.5 kgf·m, 40 lbf·ft)	
Cylinder head hanger plate bolt	33 N·m (3.4 kgf·m, 24 lbf·ft)	
Spark plug	22 N·m (2.2 kgf·m, 16 lbf·ft)	
Insulator band screw (Cylinder head side)	See page 9-29	

TOOLS

Valve spring compressor 07757-0010000 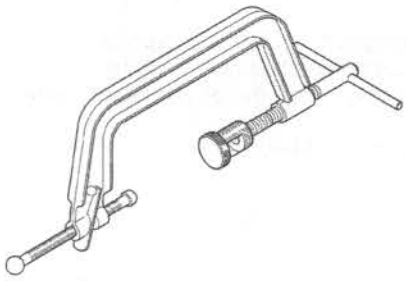	Valve spring compressor attachment 07959-KM30101 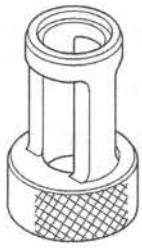	Valve guide driver, 5.0 mm 07942-MA60000 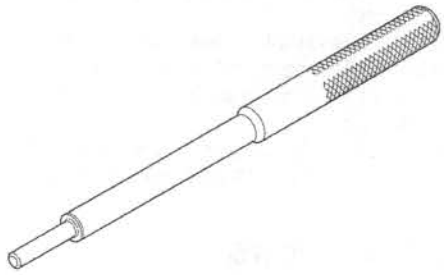
Valve guide driver 07743-0020000 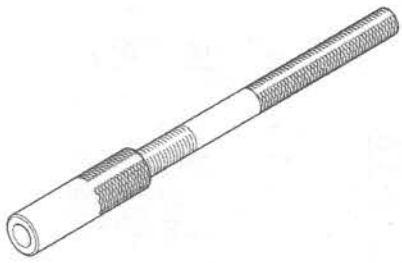 Not available in U.S.A.	Tappet hole protector (IN) 07HMG-MR70002  Not available in U.S.A.	Valve guide reamer, 5.0 mm 07984-MA60001 or 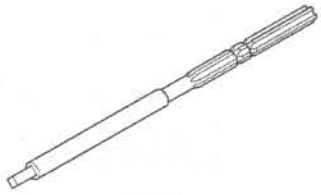 07984-MA6000D (U.S.A. only)
Valve seat cutter, 35 mm (45°, IN) 07780-0010400 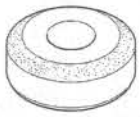 or equivalent commercially available in U.S.A.	Valve seat cutter, 33 mm (45°, EX) 07780-0010800 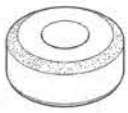 or equivalent commercially available in U.S.A.	Flat cutter, 33 mm (32°, EX) 07780-0012900 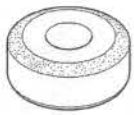 or equivalent commercially available in U.S.A.
Flat cutter, 36 mm (32°, IN) 07780-0013500 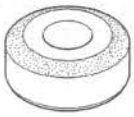 or equivalent commercially available in U.S.A.	Interior cutter, 37.5 mm (60°, IN) 07780-0014100 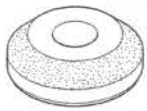 or equivalent commercially available in U.S.A.	Interior cutter, 34 mm (60°, EX) 07780-0014700 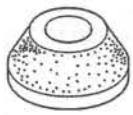 or equivalent commercially available in U.S.A.

Cutter holder, 5.0 mm 07781-0010400 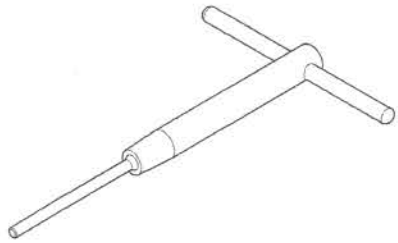 or equivalent commercially available in U.S.A.	Cam chain tensioner holder 070MG-0010100 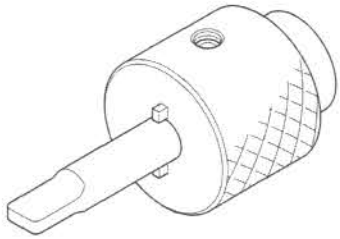 or 07AMG-001A100 (U.S.A. only)	Compression gauge attachment 07RMJ-MY50100 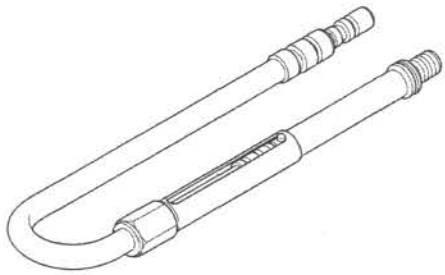
Compression test adaptor 07AMJ-MENA200 (U.S.A. only) 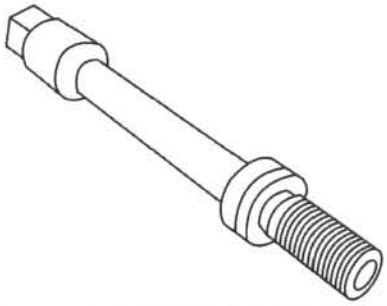		

TROUBLESHOOTING

- Engine top-end problems usually affect engine performance. These problems can be diagnosed by a compression test or by tracing top-end noise with a sounding rod stethoscope.
- If the performance is poor at low speeds, check for white smoke in the crankcase breather hose. If the hose is smoky, check for seized piston rings.

Compression too low, hard starting or poor performance at low speed

- Valves:
  - Incorrect valve adjustment
  - Burned or bent valves
  - Incorrect valve timing
  - Broken valve spring
  - Uneven valve seating
- Cylinder head:
  - Leaking or damaged cylinder head gasket
  - Warped or cracked cylinder head
- Loose spark plug
- Faulty cylinder, piston or piston rings (page 10-6)
- Faulty decompressor plunger
- Faulty decompressor weight

Compression too high, over-heating or knocking

- Excessive carbon build-up on piston head or combustion chamber

Excessive smoke

- Worn valve stem or valve guide
- Damaged stem seal
- Faulty cylinder, piston or piston rings (page 10-6)

Excessive noise

- Incorrect valve adjustment
- Sticking valve or broken valve spring
- Worn or damaged camshaft
- Worn or damaged valve lifter
- Worn or loose cam chain
- Worn or damaged cam chain tensioner
- Worn cam sprocket teeth
- Faulty cylinder, piston or piston rings (page 10-6)
- Worn crankshaft bearings (page 13-23)
- Worn or damaged connecting rod big end bearing (page 13-21)
- Worn connecting rod small end (page 10-8)
- Worn balancer shaft bearings (page 13-25)
- Improper balancer installation (page 13-7)
- Worn, seized or chipped transmission gear (page 13-15)
- Worn or damaged transmission bearing (page 13-25)

Rough idle

- Low cylinder compression

CYLINDER COMPRESSION TEST

Warm up the engine.

Stop the engine, and remove the spark plug (page 4-10).

Install a compression gauge attachment into the spark plug hole.

TOOL:

Compression gauge attachment	**07RMJ-MY50100 or 07AMJ-MENA200 (U.S.A. only)**

Connect a compression gauge onto the compression gauge attachment.

Temporarily install the fuel tank.

Open the throttle fully.

Operate the kickstarter pedal forcefully several times until the gauge needle stops moving.

COMPRESSION: 392 kPa (4.0 kg/cm^2, 57 psi) at 600 rpm

Low compression can be caused by:

- Improper valve adjustment
- Valve leakage
- Blown cylinder head gasket
- Worn piston rings or cylinder (page 10-6)

High compression can be caused by:

- Carbon deposits on piston head or combustion chamber
- Faulty decompressor system

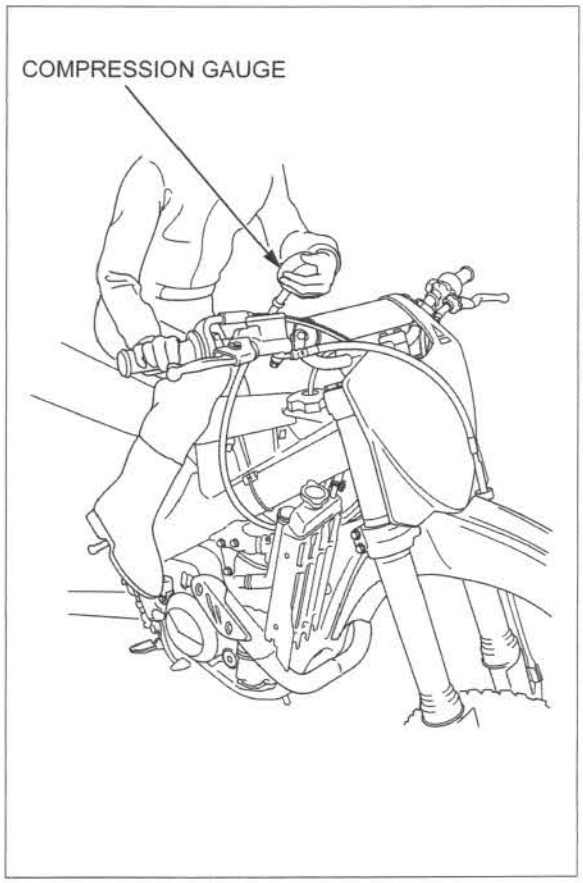

CYLINDER HEAD COVER

REMOVAL

Hang the fuel tank to the left side of the frame (page 4-6).

Disconnect the spark plug cap and crankcase breather hose.

Remove the bolts, rubber seals and cylinder head cover.

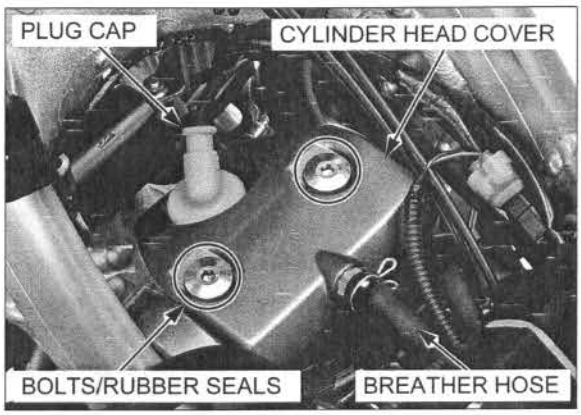

Remove the plug hole seal ring and packing.

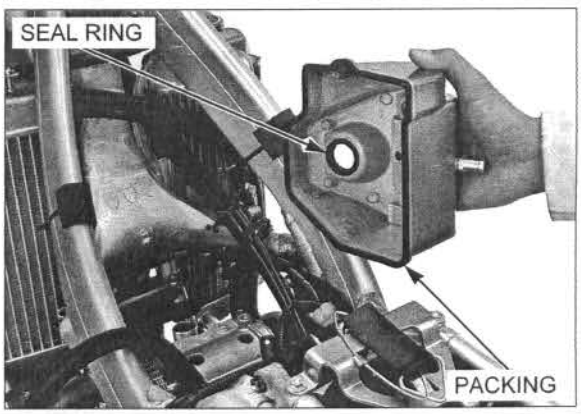

DISASSEMBLY/ASSEMBLY

Remove the bolts and breather plate.

Clean the cylinder head cover and breather plate.

Apply liquid sealant (TB1207B or equivalent) to the cylinder head cover as shown.

Install the breather plate to the cylinder head cover.

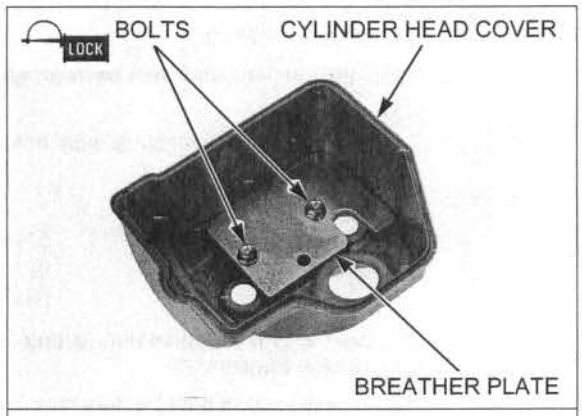

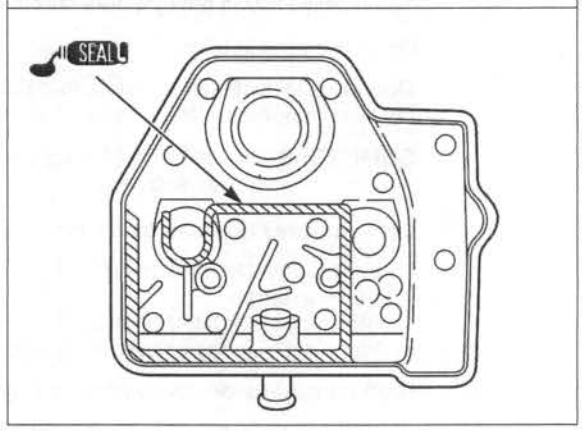

Clean and apply locking agent to the breather plate bolt threads as shown.

Install and tighten the breather plate bolts to the specified torque.

TORQUE: 12 N·m (1.2 kgf·m, 9 lbf·ft)

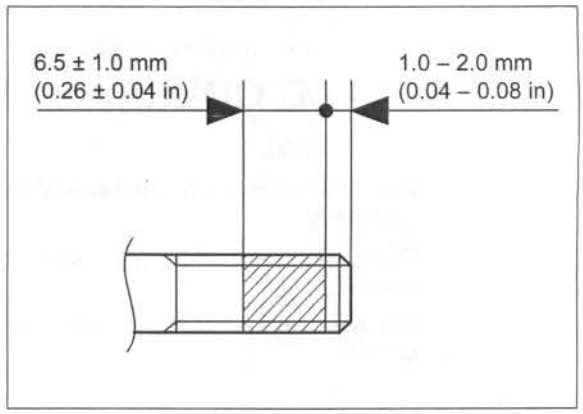

INSTALLATION

Check the plug hole seal ring and packing for damage or deterioration and replace them if necessary.

Apply engine oil to the plug hole seal ring outer surface, and install it.

Install the packing to the cylinder head cover.

Install the cylinder head cover.

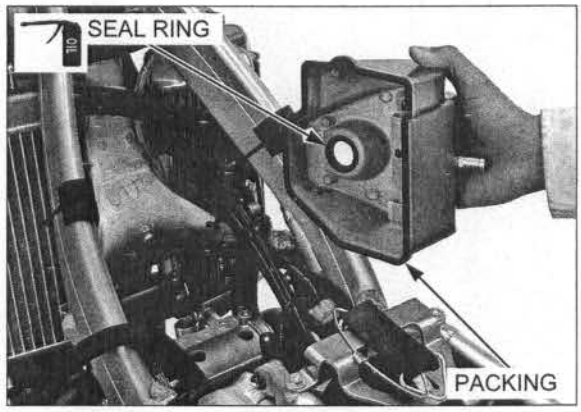

Make sure the plug hole seal ring installed properly as shown.

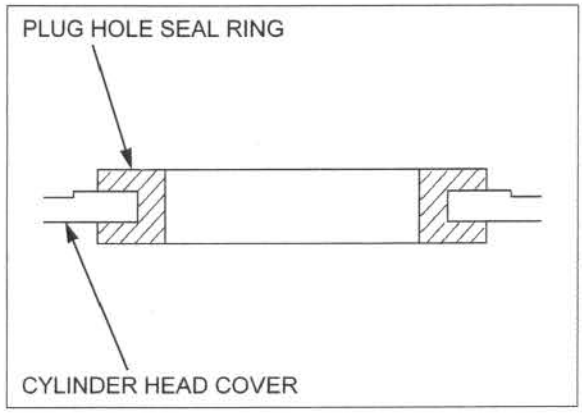

Check the rubber seals are in good condition, replace them if necessary.

Install the rubber seals onto the cylinder head cover with their "UP" marks facing up.

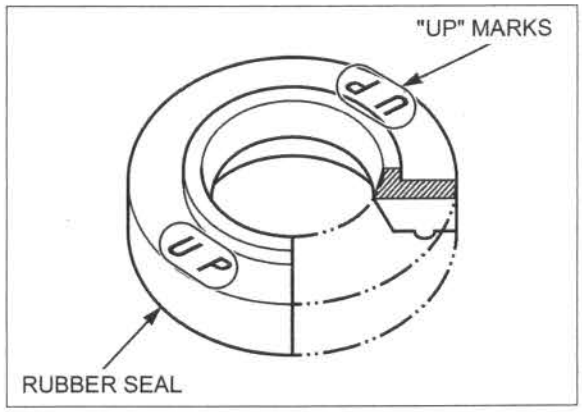

Install and tighten the bolts to the specified torque.

TORQUE: 10 N·m (1.0 kgf·m, 7 lbf·ft)

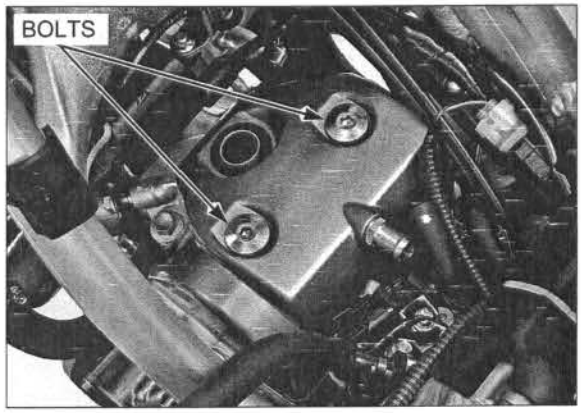

Connect the spark plug cap and crankcase breather hose.

Install the fuel tank (page 4-6).

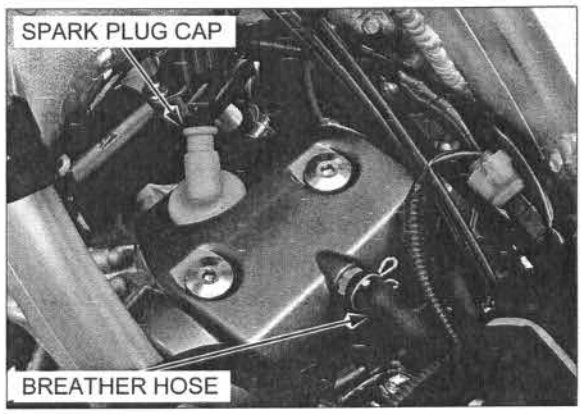

CAMSHAFT/ROCKER ARM REMOVAL

CAMSHAFT

Remove the cylinder head cover (page 9-7).

Remove the crankshaft hole cap and O-ring.

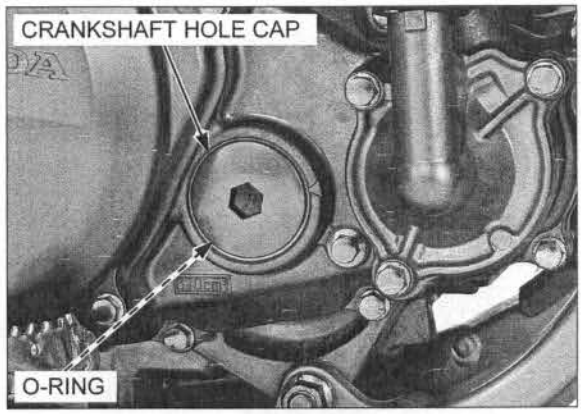

Turn the crankshaft clockwise to align the punch mark on the primary drive gear with the "△" mark on the right crankcase cover.
Check the index line on the cam sprocket aligns with cut-out of the camshaft holder.
Make sure the piston is at TDC (Top Dead Center) on the compression stroke.
This position can be obtained by confirming that there is slack in the rocker arm.

If there is no slack, it is because the piston is moving through the exhaust stroke to TDC.
Rotate the crankshaft clockwise one full turn, and match up the punch mark on the primary drive gear with "△" mark on the right crankcase cover again.

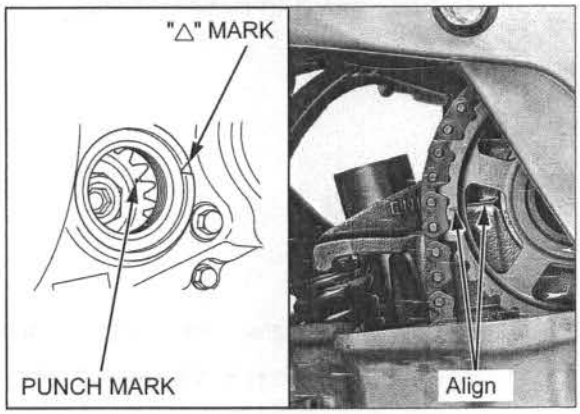

Remove the cam chain tensioner lifter bolt and sealing washer.

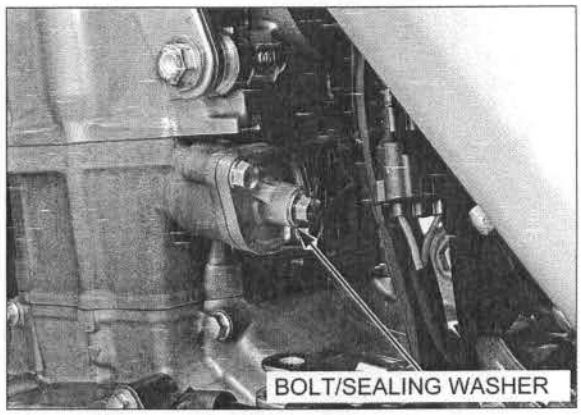

Insert the cam chain tensioner holder into the cam chain tensioner lifter.
Turn the cam chain tensioner holder clockwise fully and lock the cam chain tensioner lifter by pushing the handle.

TOOL:

Cam chain tensioner holder	**070MG-0010100 or 07AMG-001A100 (U.S.A. only)**

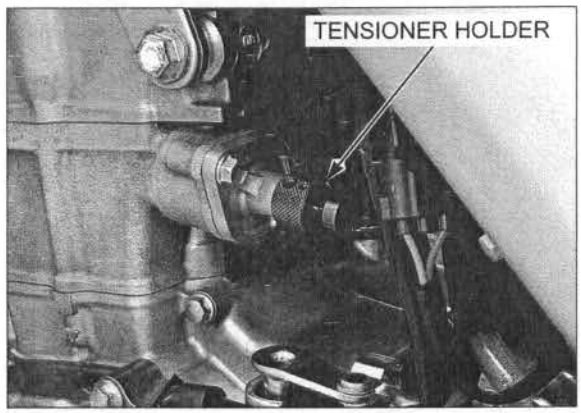

Be careful not to drop the set rings into the crankcase.

Remove the bolts and camshaft holder.

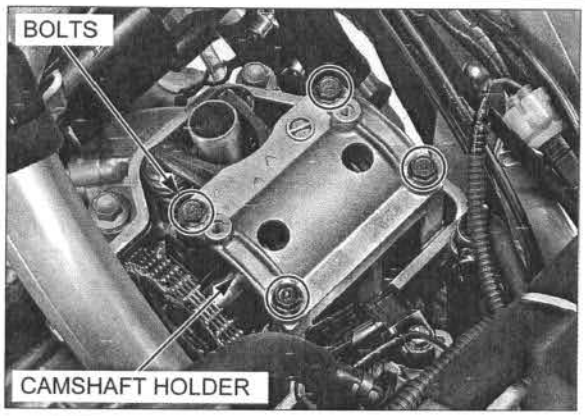

Remove the set rings from the camshaft bearings.

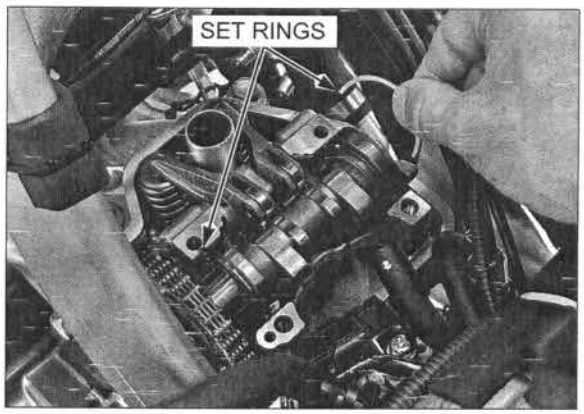

Slide the cam sprocket side camshaft bearing to the cam sprocket.

Remove the camshaft by removing the cam chain from the cam sprocket.

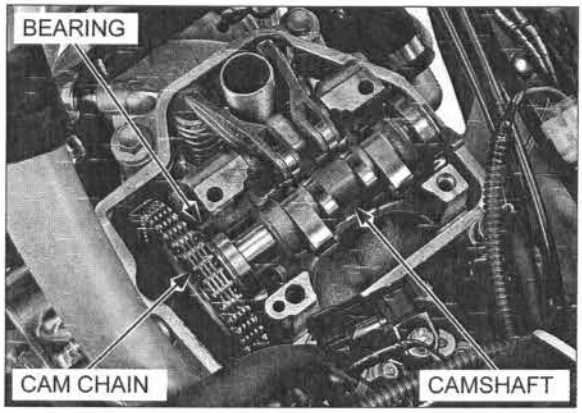

ROCKER ARM

Thread a 6 mm bolt into the rocker arm shaft, and pull out the rocker arm shaft from the cylinder head.

Remove the rocker arms.

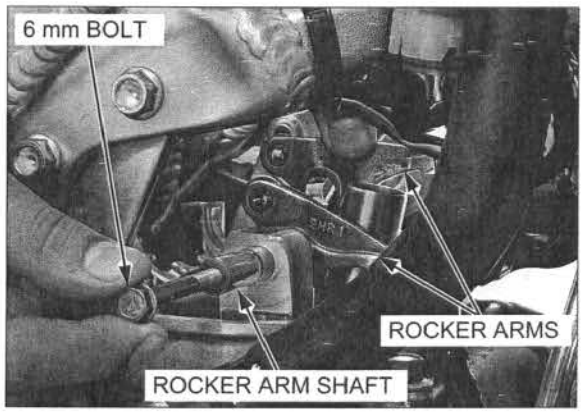

INSPECTION

ROCKER ARM

If the camshaft contact surface of the rocker arm is damaged or abnormally worn, check the cam lobes for damage (page 9-13).

Inspect the camshaft contact surface of the rocker arm for wear or damage.
Inspect the rocker arm oil passage for clogs.

Measure the rocker arm I.D.

SERVICE LIMIT: 12.025 mm (0.4734 in)

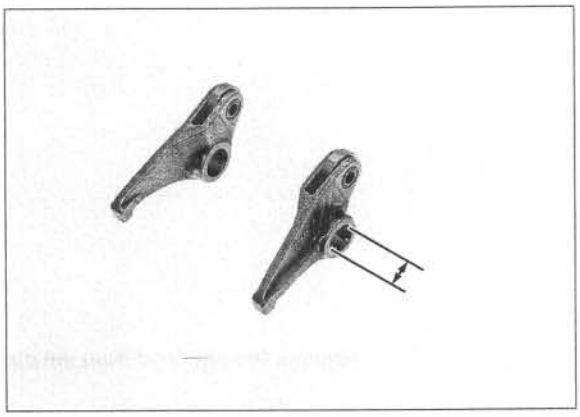

ROCKER ARM SHAFT

Inspect the rocker arm shaft for wear or damage.

Measure the rocker arm shaft O.D.

SERVICE LIMIT: 11.97 mm (0.471 in)

Calculate the rocker arm-to-shaft clearance.

SERVICE LIMIT: 0.055 mm (0.0022 in)

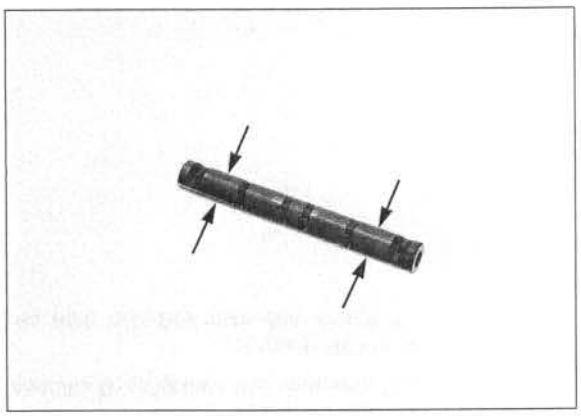

CAMSHAFT

Turn the outer race of the camshaft bearings with your finger.
The bearing should turn smoothly and quietly.
Also check that the bearing inner race fits tightly on the camshaft.

Replace the camshaft assembly if the cam sprocket side bearing do not turn smoothly, quietly or if they fit loosely on the camshaft.

Replace the decompressor side bearing if it do not turn smoothly, quietly or if they fit loosely on the camshaft (page 9-14).

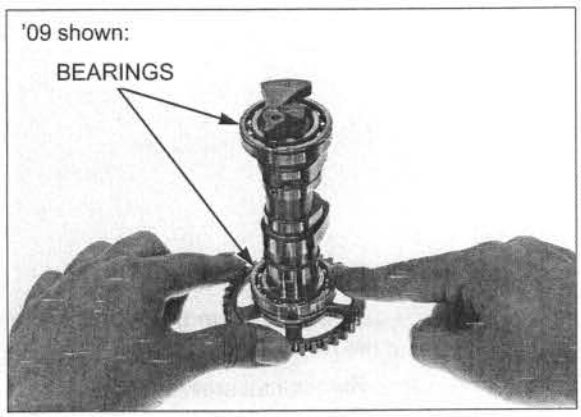

Check the cam sprocket teeth for wear or damage.

Check the cam lobe surfaces for scoring or evidence of insufficient lubricant.

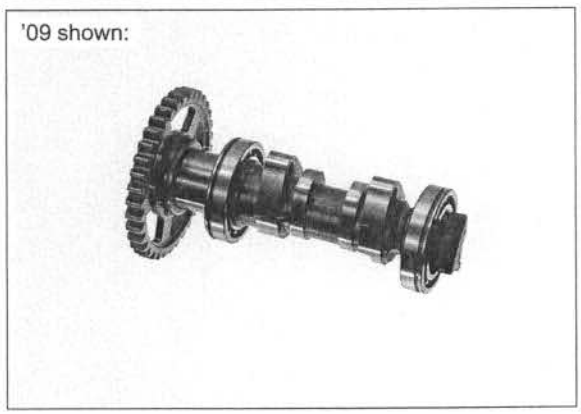

Measure the height of each cam lobe.

SERVICE LIMITS:
IN: 37.52 mm (1.477 in)
EX: 28.58 mm (1.125 in)

NOTE:
Check the rocker arm if the cam lobe is worn or damage.

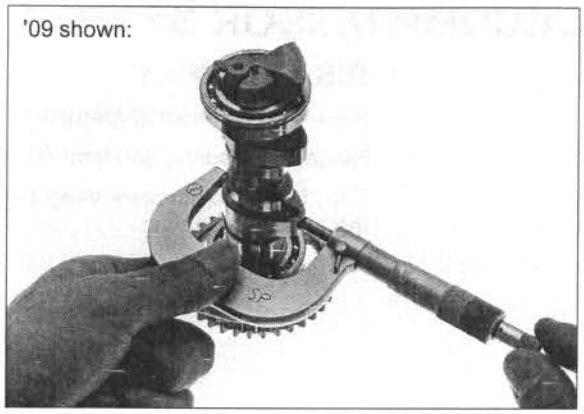

DECOMPRESSOR SYSTEM

Make sure of the plunger operation using the following procedure:

1. Move the decompressor weight outward with your finger.
   – The plunger operation is normal if it is retracted.
2. Release the decompressor weight.
   – The decompressor weight should move inward automatically.
   – The plunger operation is normal if it is protruded.

If the decompressor weight and plunger operation is abnormal, disassemble and clean the decompressor system and camshaft (page 9-14).

Replace the camshaft and decompressor system as an assembly if necessary.

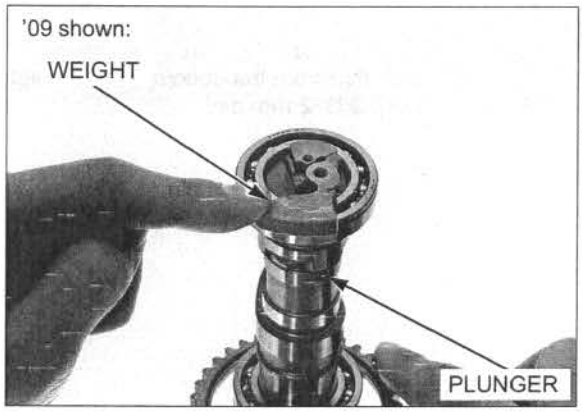

CAMSHAFT HOLDER

Check the set ring grooves for scoring or scratchers.

Check the camshaft holder for installation of the dowel pins.

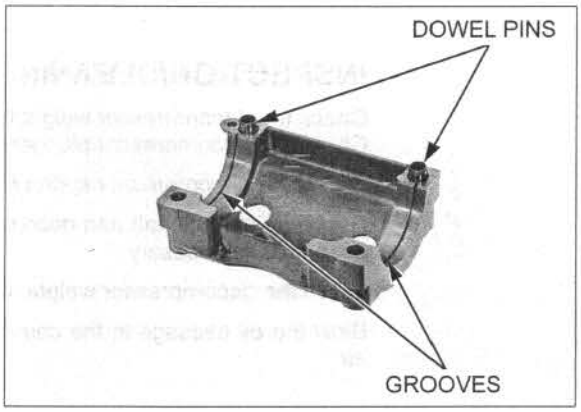

DECOMPRESSOR SYSTEM

DISASSEMBLY

Remove the camshaft (page 9-10).

Release the spring end from the decompressor weight.

Turn the decompressor weight as shown and remove the camshaft bearing.

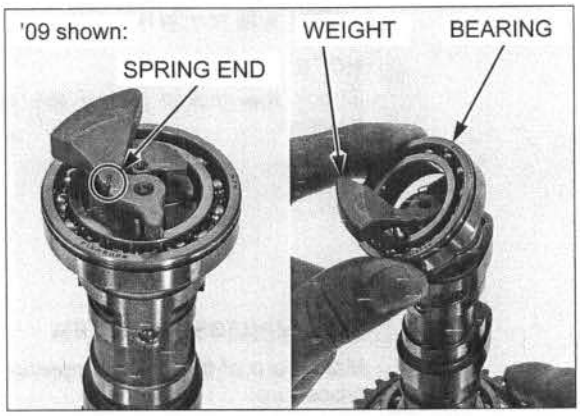

Push out the decompressor weight stopper pin using an O.D. 2 mm pin.

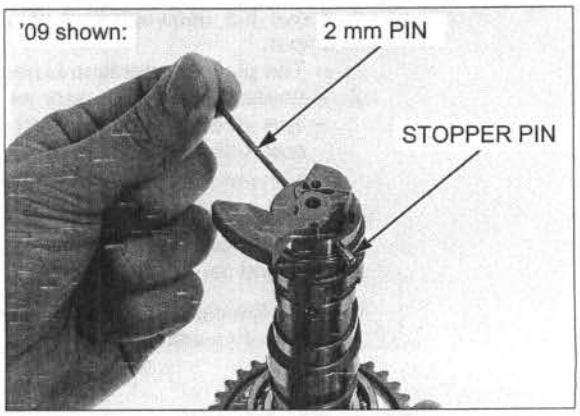

Remove the decompressor weight, spring and plunger.

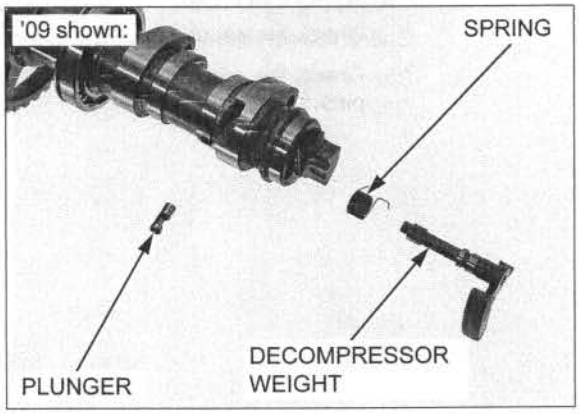

INSPECTION/CLEANING

Check the decompressor weight for bends or damage. Check the decompressor plunger for wear or damage.

Check the decompressor spring for fatigue.

Replace the camshaft and decompressor system as an assembly if necessary.

Clean the decompressor weight, plunger and spring.

Blow the oil passage in the camshaft with compressed air.

ASSEMBLY

'09:

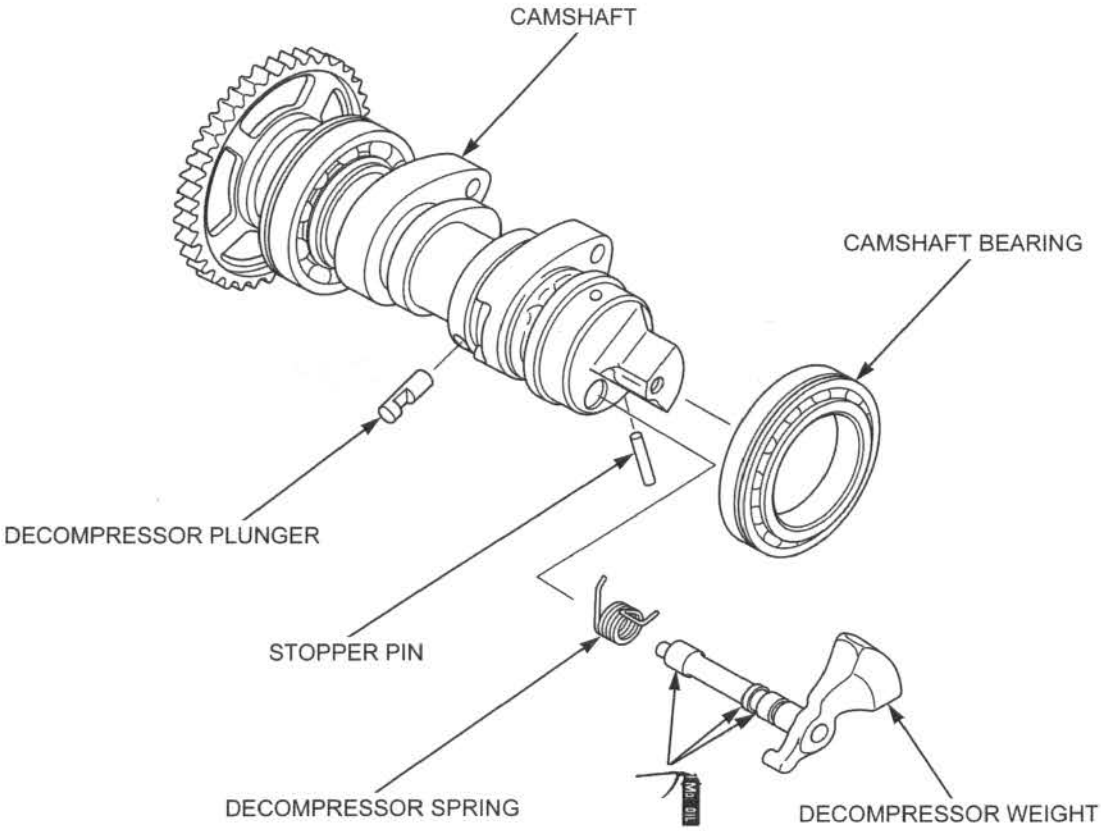

After '09:

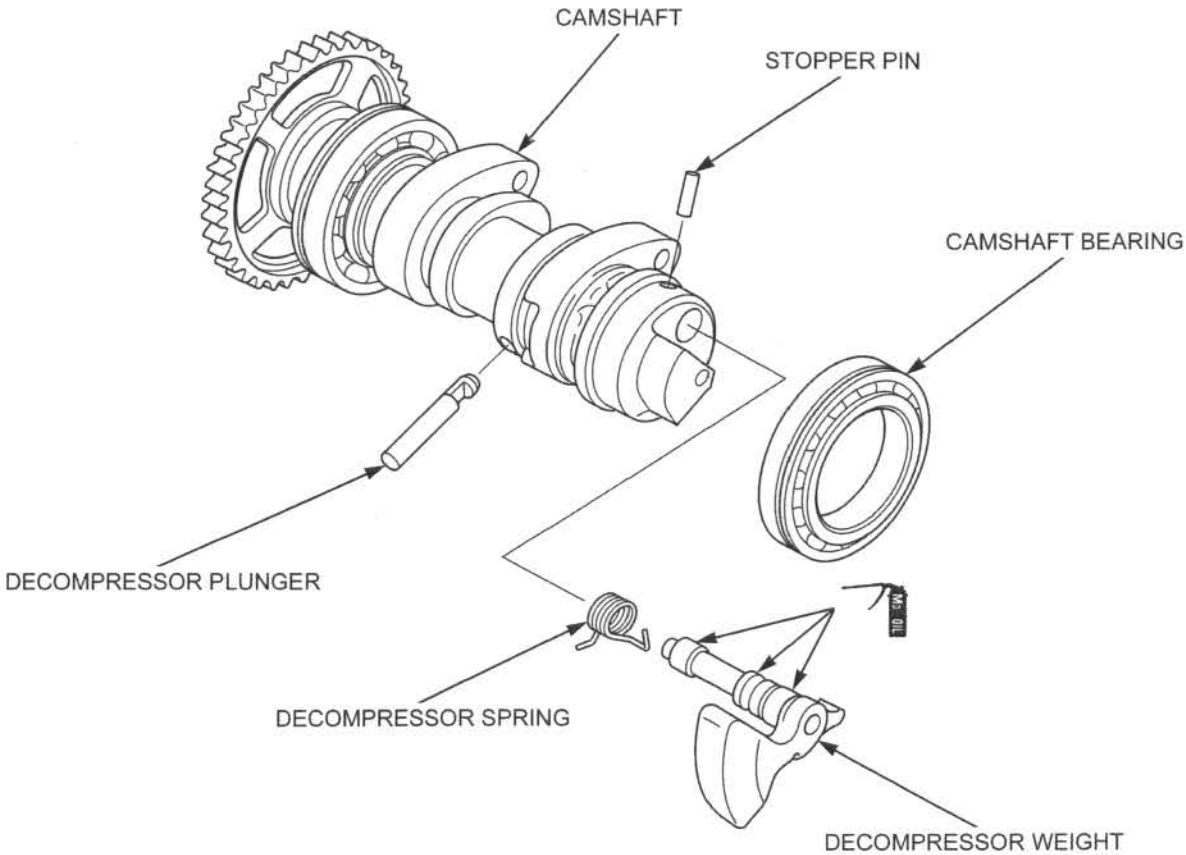

Apply molybdenum oil solution to the decompressor weight Φ 7 and Φ 6.5 area and plunger sliding area.

Install the spring onto the decompressor weight but do not hook the spring end to the decompressor weight yet.

Install the plunger with its cut-out facing the decompressor side.

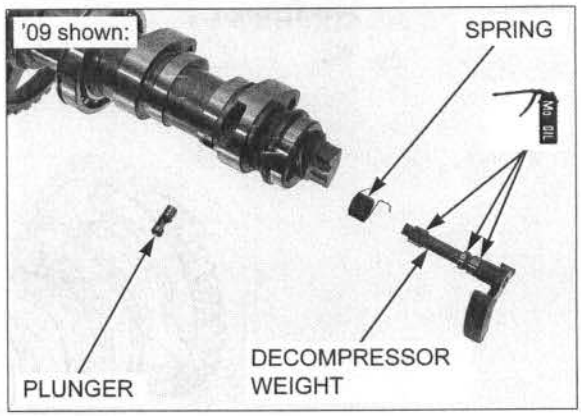

Install the decompressor weight by aligning the lower side spring end with the camshaft flange and decompressor weight end with the plunger cut-out.

Check the plunger operation by moving the decompressor weight with your finger.

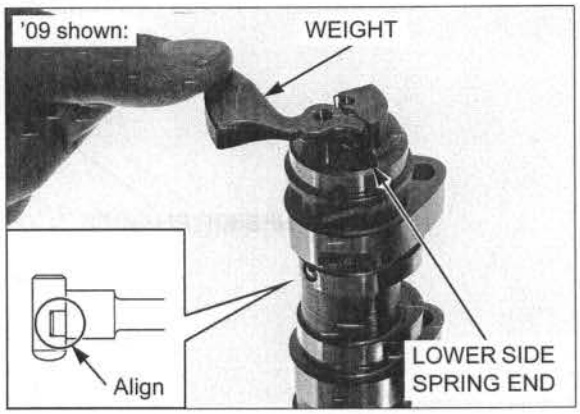

Install the decompressor weight stopper pin into the camshaft.

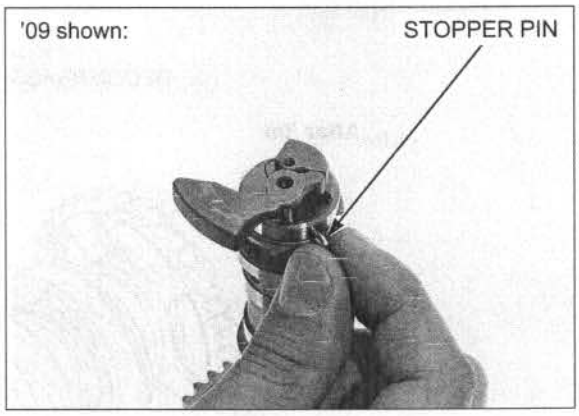

Install the camshaft bearing with its groove side facing out.

Hook the upper side spring end to the decompressor weight as shown.

Install the camshaft (page 9-32).

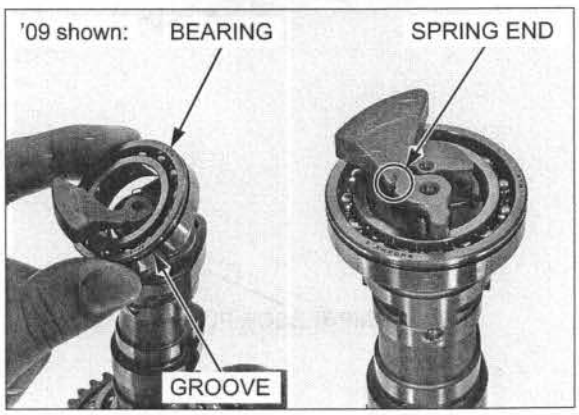

CYLINDER HEAD REMOVAL

Remove the following:

- Ignition coil (page 17-13)
- Exhaust pipe (page 3-9)
- Throttle body (page 6-50)
- Camshaft (page 9-10)
- Rocker arm (page 9-11)

Drain the coolant (page 7-8).

Be sure to mark the valve lifters so they can be installed in their original positions.

Remove the valve lifters from the cylinder head.

- The shims may stick to the inside of the valve lifters. Do not allow the shims to drop into the crankcase.

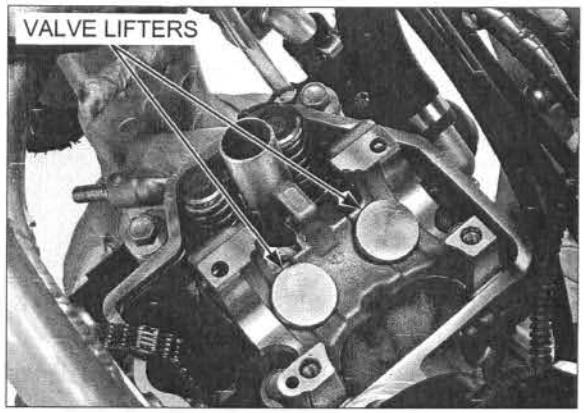

Be careful not to drop the shims into the crankcase.

Remove the shims.

- The shims can be easily removed with tweezers or a magnet.
- Mark all valve shims so they can be installed in their original position.

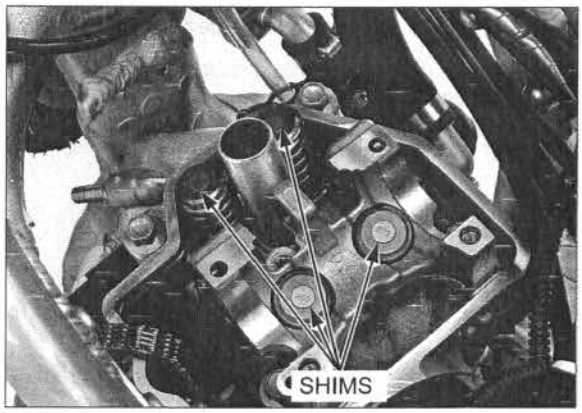

Disconnect the ECT sensor 2P (Black) connector.

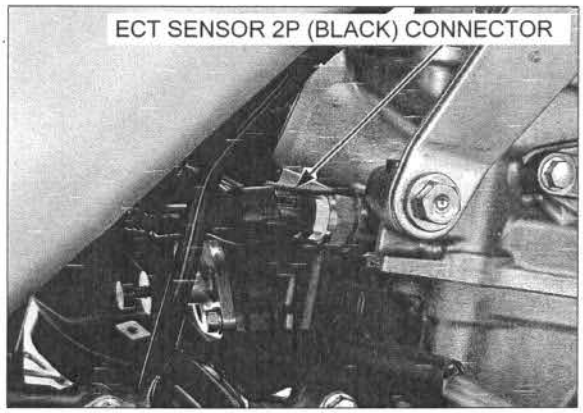

Loosen the hose band screw and disconnect the upper radiator hose.

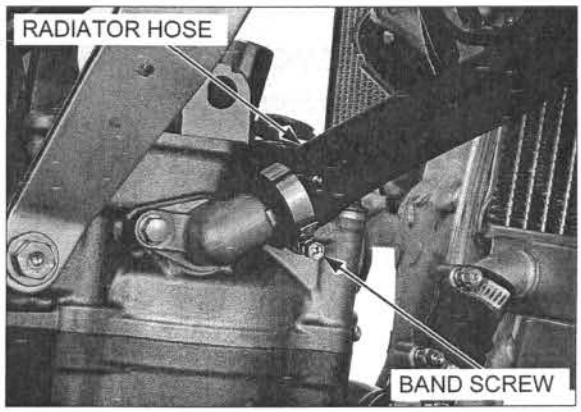

Remove the cylinder head hanger bolts.

Remove the cylinder head hanger plate bolts and cylinder head hanger plates.

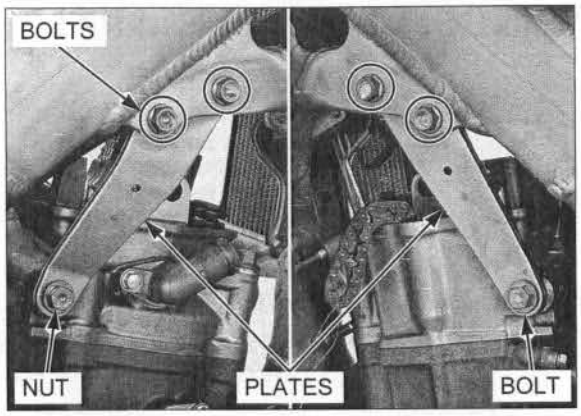

Remove the cylinder head 6 mm bolt.

Loosen the cylinder head bolts in a crisscross pattern in two or three steps.

Be careful not to let the washers drop into the crankcase.

Remove the bolts, washers and cylinder head.

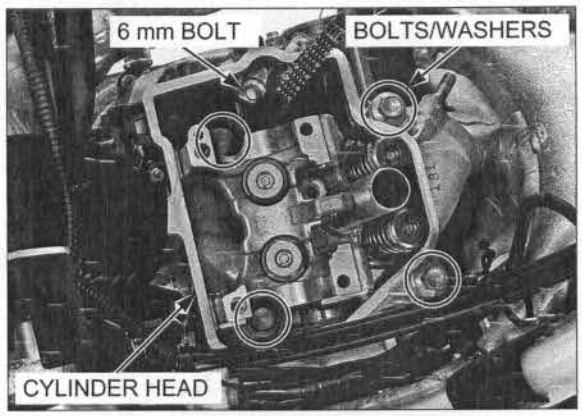

Remove the dowel pins and gasket.

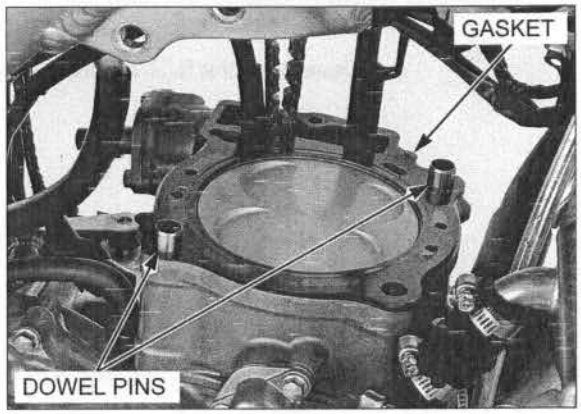

CAM CHAIN TENSIONER/CAM CHAIN GUIDE

REMOVAL

Remove the following:

- Cylinder head (page 9-17)
- Left crankcase cover (page 12-4)
- Flywheel (page 12-5)

Remove the cam chain guide.

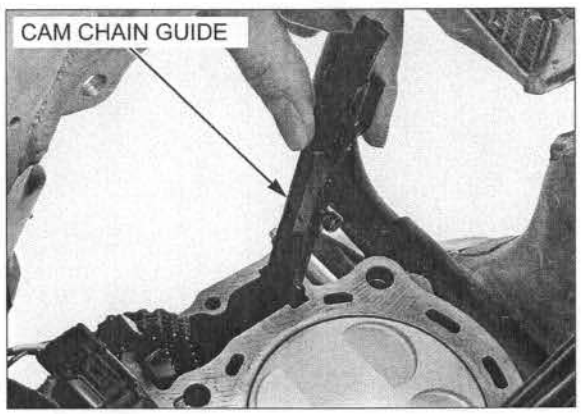

Remove the bolt, collar and cam chain tensioner.

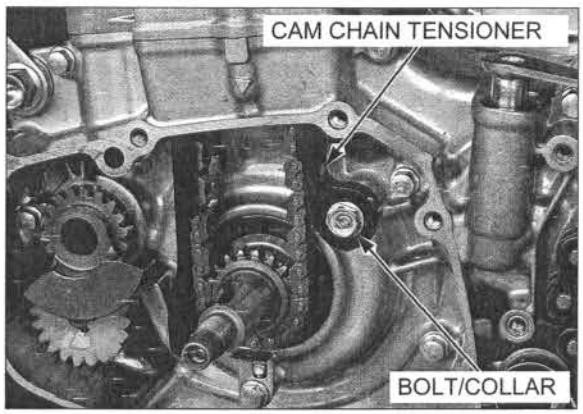

INSPECTION

Inspect the cam chain tensioner and cam chain guide for excessive wear or damage, replace them if necessary.

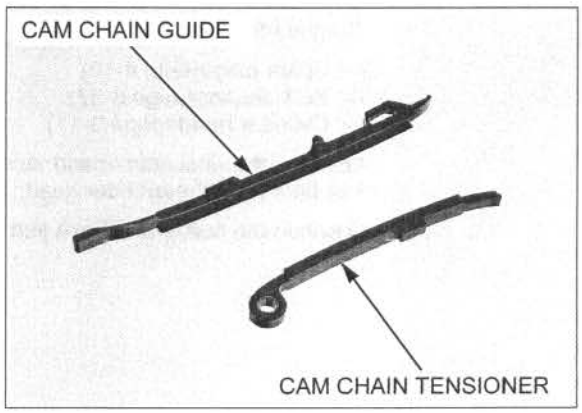

INSTALLATION

Clean and apply locking agent to the cam chain tensioner bolt threads as shown.

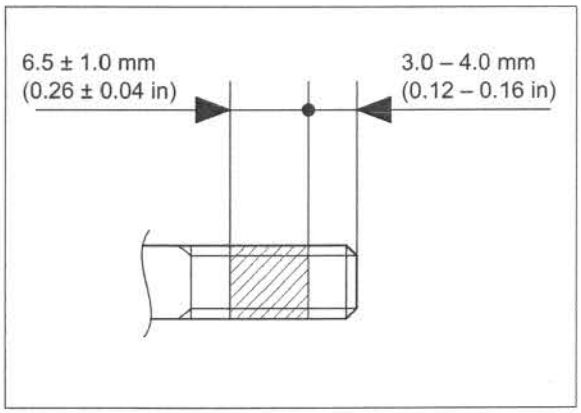

Install the cam chain tensioner, collar and cam chain tensioner bolt.

Tighten the cam chain tensioner bolt to the specified torque.

TORQUE: 12 N·m (1.2 kgf·m, 9 lbf·ft)

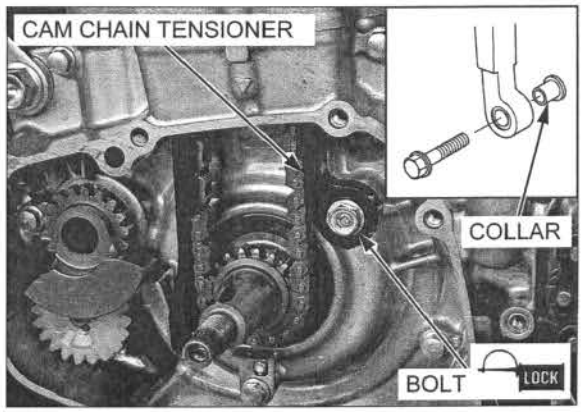

Install the cam chain guide by aligning its tabs with the grooves in the cylinder and guide end with the groove in the crankcase.

Install the following:

- Flywheel (page 12-6)
- Left crankcase cover (page 12-8)
- Cylinder head (page 9-30)

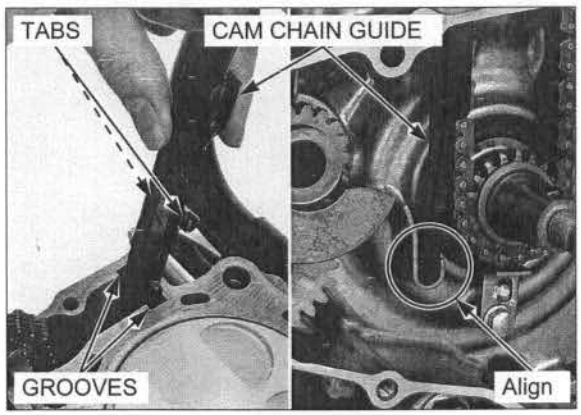

CYLINDER HEAD DISASSEMBLY

Remove the following:

- Spark plug (page 4-10)
- ECT sensor (page 6-57)
- Cylinder head (page 9-17)

Loosen the insulator band screw and remove the insulator from the cylinder head.

Remove the bolt, water hose joint and O-ring.

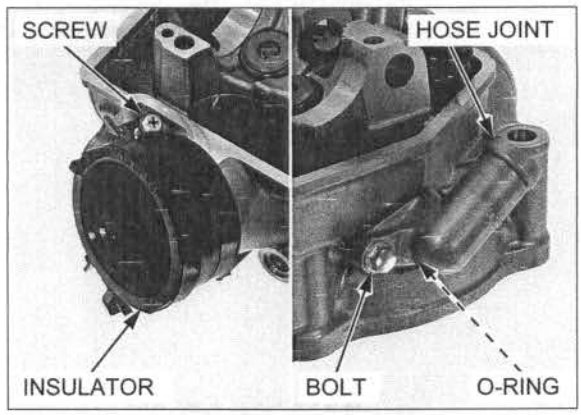

Install the tappet hole protector into the valve lifter bore.

TOOL:

Tappet hole protector	**07HMG-MR70002 not available in U.S.A.**

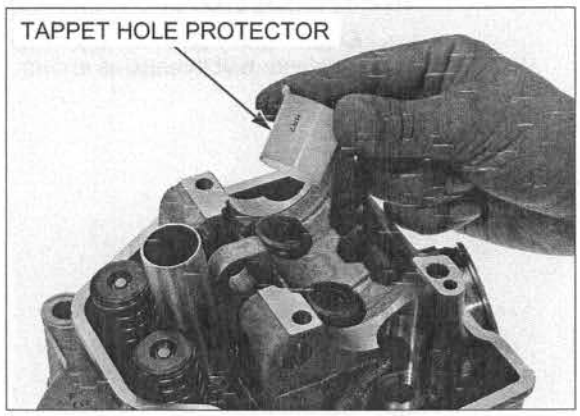

U.S.A. only: An equivalent tool can easily be made from a plastic 35 mm film container as shown.

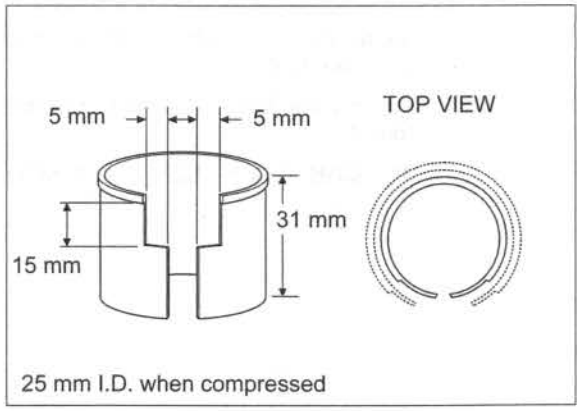

To prevent loss of tension, do not compress the valve springs more than necessary to remove the cotters.

Remove the valve spring cotters using the special tools.

TOOLS:

Valve spring compressor	**07757-0010000**
Valve spring compressor attachment	**07959-KM30101**

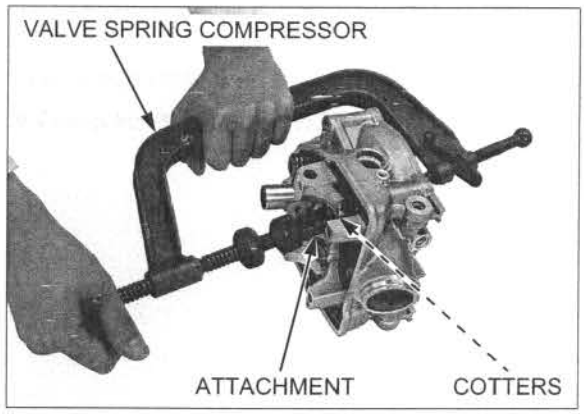

Mark all parts during disassembly so they can be installed in their original locations.

Remove the following:

- Spring retainer
- Valve spring
- Valve
- Stem seal
- Spring seat

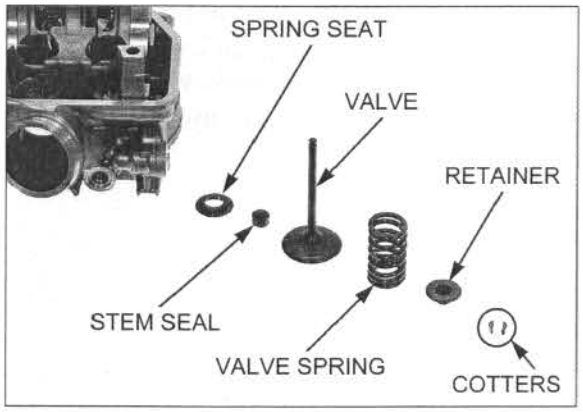

CYLINDER HEAD INSPECTION

CYLINDER HEAD

Disassemble the cylinder head (page 9-20).

Use care not to scratch the combustion chamber or head gasket surface.

Remove the carbon deposits from the combustion chamber or exhaust port.

Check the spark plug hole and valve area for cracks.

Replace the cylinder head if necessary.

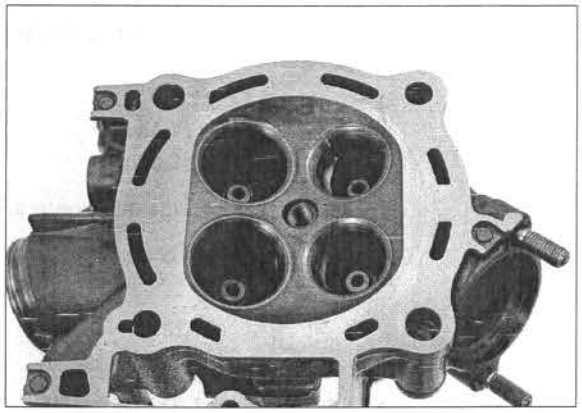

Check the cylinder head for warpage with a straight edge and feeler gauge.

SERVICE LIMIT: 0.05 mm (0.002 in)

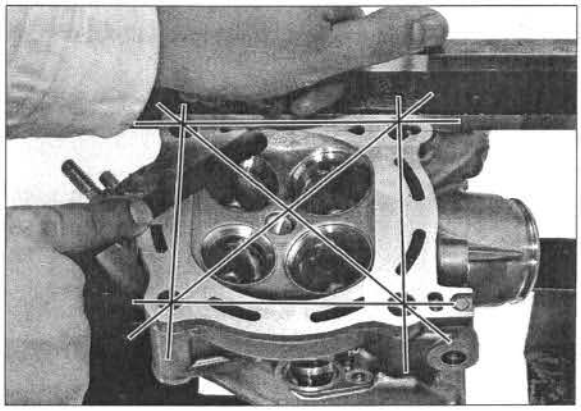

Check the valve lifter bore for scoring, scratches or damage.

Measure each valve lifter bore I.D.

SERVICE LIMIT: 26.04 mm (1.025 in)

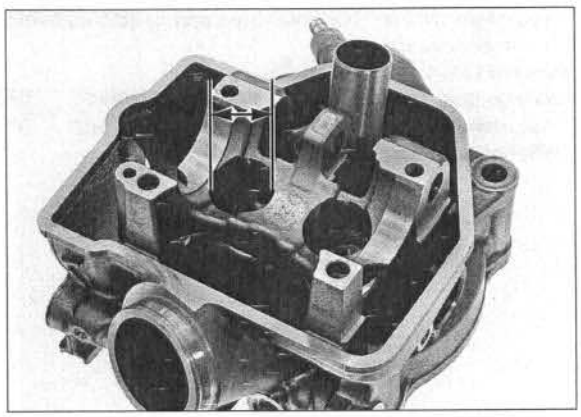

VALVE LIFTER

Check the valve lifter for scoring, scratches or damage.
Measure each valve lifter O.D.

SERVICE LIMIT: 25.97 mm (1.022 in)

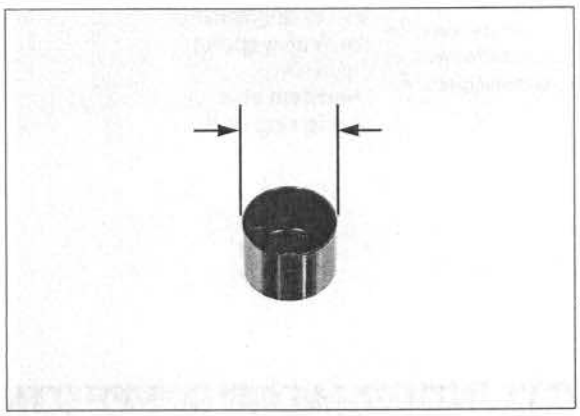

VALVE SPRING

Check the valve springs for fatigue or damage.

Measure the free length of the intake and exhaust valve springs.

SERVICE LIMITS:
IN: 40.6 mm (1.60 in)
EX: 42.1 mm (1.66 in)

Replace the springs if they are shorter than the service limits.

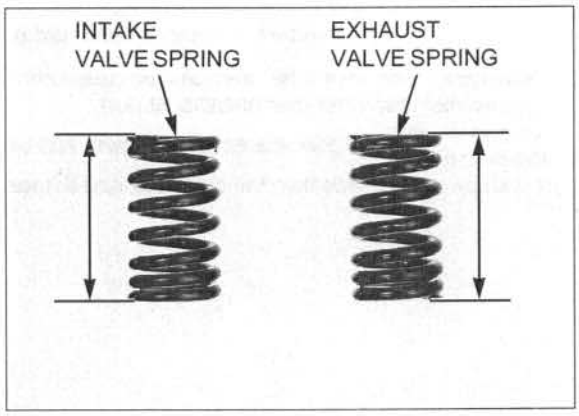

VALVE/VALVE GUIDE

Inspect each valve for out-of-round, burns, scratches or abnormal stem wear.

Check the valve movement in the guide.
Measure and record the valve stem O.D.

STANDARD:
IN: 4.975 – 4.990 mm (0.1959 – 0.1965 in)
EX: 4.965 – 4.980 mm (0.1955 – 0.1961 in)

SERVICE LIMIT:
EX: 4.96 mm (0.195 in)

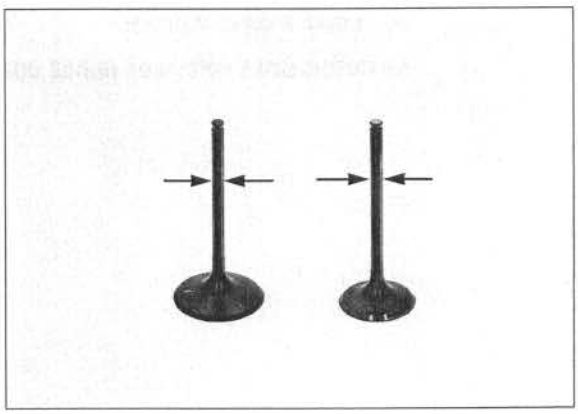

Take care not to tilt or lean the reamer in the guide while reaming.

Ream the valve guide to remove any carbon build-up before measuring the guide I.D.

Insert the reamer from the combustion chamber side of the cylinder head and always rotate the reamer clockwise.

TOOL:
Valve guide reamer, 5.0 mm **07984-MA60001 or 07984-MA6000D (U.S.A.only)**

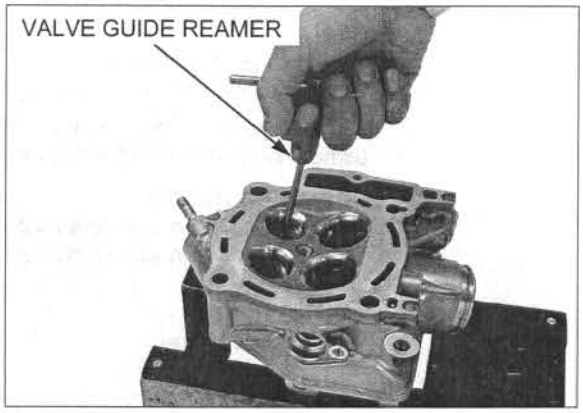

Measure and record each valve guide I.D. in the combustion chamber.

SERVICE LIMIT: 5.052 mm (0.1989 in)

Subtract each valve stem O.D. from the corresponding guide I.D. to obtain the stem-to-guide clearance.

STANDARD:
IN: 0.010 – 0.037 mm (0.0004 – 0.0015 in)
EX: 0.020 – 0.047 mm (0.0008 – 0.0019 in)

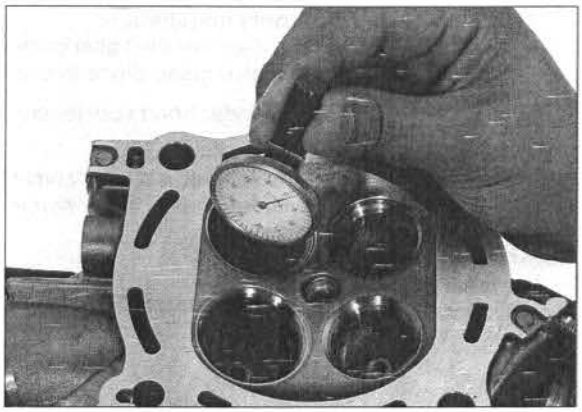

Reface the valve seats whenever the valve guides are replaced (page 9-24).

If the stem-to-guide clearance exceeds the service limits, determine if a new guide with standard dimensions would bring the clearance within tolerance. If so, replace the guides as necessary and ream to fit. If the stem-to-guide clearance exceeds the service limits with new guides also, replace the valves and guides.

VALVE GUIDE REPLACEMENT

Mark new valve guides at the proper depth (see specification page 9-24) using a marker. Chill a new valve guides in a freezer for about 1 hour.

Be sure to wear heavy gloves when handling the heated cylinder head. Using a torch to heat the cylinder head may cause warpage.

Heat the cylinder head to 100 – 150°C (212 – 302°F) with a hot plate or oven. Do not heat the cylinder head beyond 160°C (320°F). Use temperature indicator sticks, available from welding supply stores, to be sure the cylinder head is heated to the proper temperature.

Support the cylinder head and drive the valve guides out of the cylinder head from the combustion chamber side.

TOOL:
Valve guide driver, 5.0 mm **07942-MA60000**

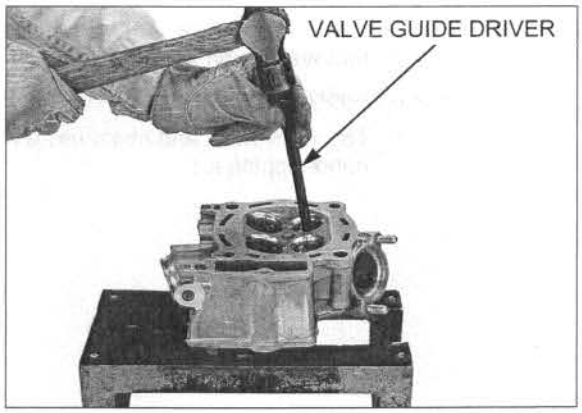

Adjust the valve guide driver to the valve guide height. While the cylinder head is still heated, drive new valve guides into the cylinder head from the top of the cylinder (camshaft and rocker arm side).

Check that the valve guides are at the proper depth using a caliper, adjust the height if necessary.

SPECIFIED DEPTH:
IN: 14.8 – 15.0 mm (0.58 – 0.59 in)
EX: 17.8 – 18.0 mm (0.70 – 0.71 in)

TOOL:

Valve guide driver	**07743-0020000 not available in U.S.A.**

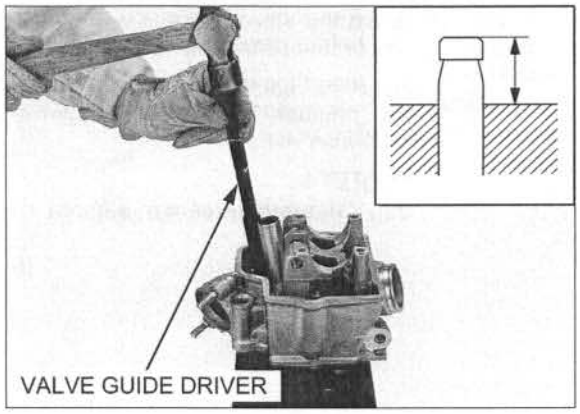

U.S.A. only installation:
Mark the depth of the valve guide using a marker.
Use the valve guide driver to correct the depth.

Let the cylinder head cool to room temperature.

Use cutting oil on the reamer during this operation. Take care not to tilt or lean the reamer in the guide while reaming.

Ream new valve guides.
Insert the reamer from the combustion chamber side of the cylinder head and always rotate the reamer clockwise.

TOOL:

Valve guide reamer, 5.0 mm	**07984-MA60001 or 07984-MA6000D (U.S.A.only)**

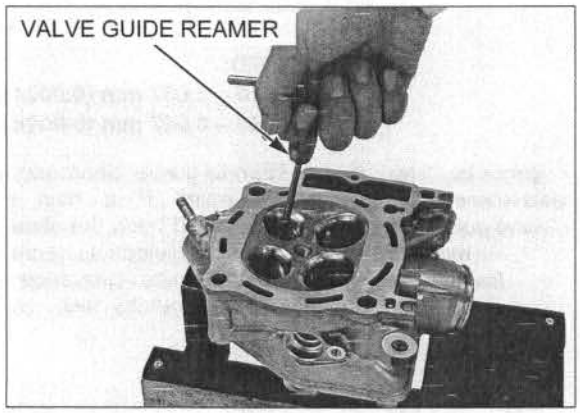

Clean the cylinder head thoroughly to remove any metal particles after reaming and reface the valve seats (page 9-24).

VALVE SEAT INSPECTION/REFACING

Clean the intake and exhaust valves thoroughly to remove carbon deposits.

Apply a light coating of Prussian Blue to the valve seat.

Tap the valves and seats using a rubber hose or other hand-lapping tool.

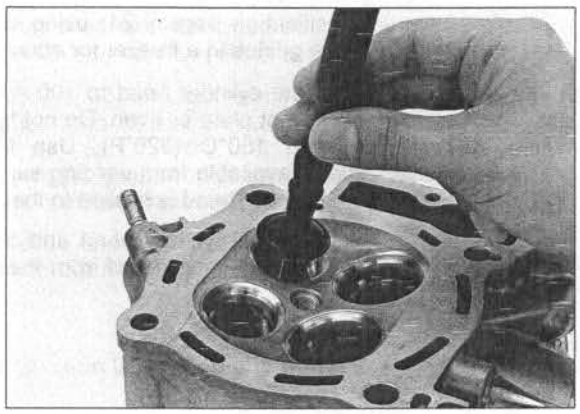

Remove the valve and inspect the valve seat face.
The valve seat contact should be within the specified width and even all around the circumference.

STANDARD:
IN: 1.1 – 1.3 mm (0.04 – 0.05 in)
EX: 1.3 – 1.5 mm (0.05 – 0.06 in)

SERVICE LIMIT:
IN/EX: 2.0 mm (0.08 in)

- When the service limits are exceeded, replace the intake valve and recheck the valve seat width.

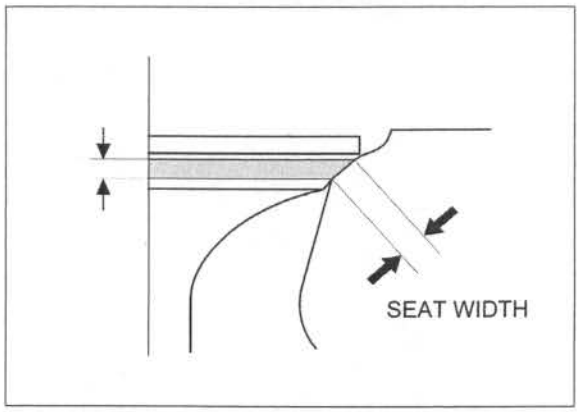

If the seat width is not within specification, reface the valve seat (page 9-25).

Inspect the valve seat face for:

- Uneven seat width:
  – Replace the valve and reface the valve seat.
- Damaged face:
  – Replace the valve and reface the valve seat.

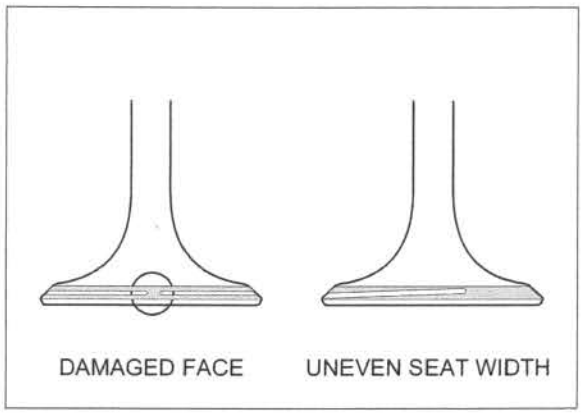

The valves cannot be ground. If a valve face is burned or badly worn or if it contacts the seat unevenly, replace the valve.

- Contact area (too high or too low)
  – Reface the valve seat.

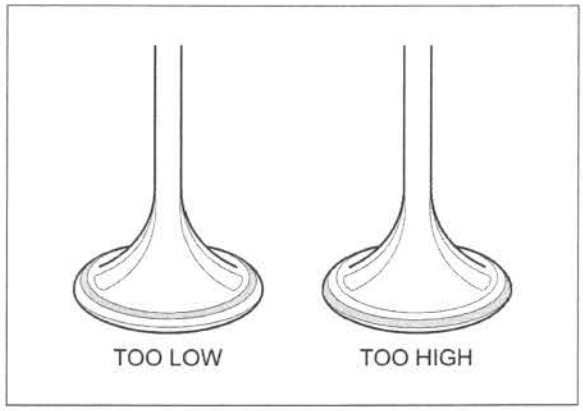

VALVE SEAT REFACING

Follow the refacing manufacturer's operating instructions.

Valve seat cutters/grinders or equivalent valve seat refacing equipment are recommended to correct worn valve seats.

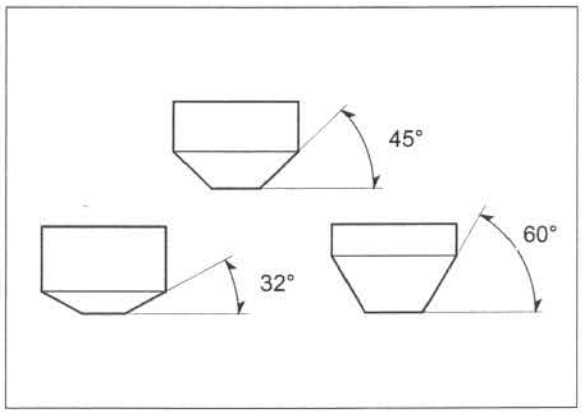

If the contact area is too high on the valve, the seat must be lowered using a 32° flat cutter.

If the contact area is too low on the valve, the seat must be raised using a 60° interior cutter.

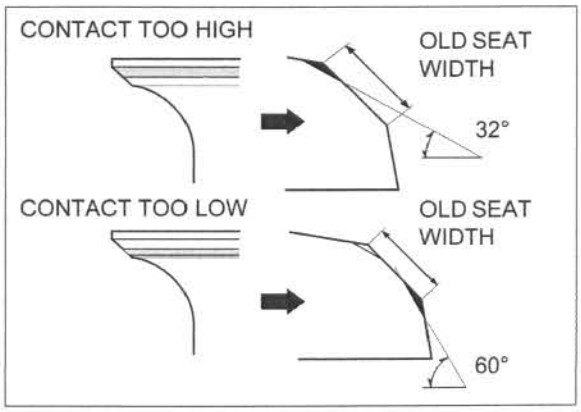

Reface the seat with a 45° cutter whenever a valve guide is replaced.

Use a 45° seat cutter, remove any roughness or irregularities from the seat.

TOOLS:

IN:	
Seat cutter, 35 mm	**07780-0010400**
Cutter holder, 5.0 mm	**07781-0010400**
EX:	
Seat cutter, 33 mm	**07780-0010800**
Cutter holder, 5.0 mm	**07781-0010400**

or equivalent commercially available in U.S.A.

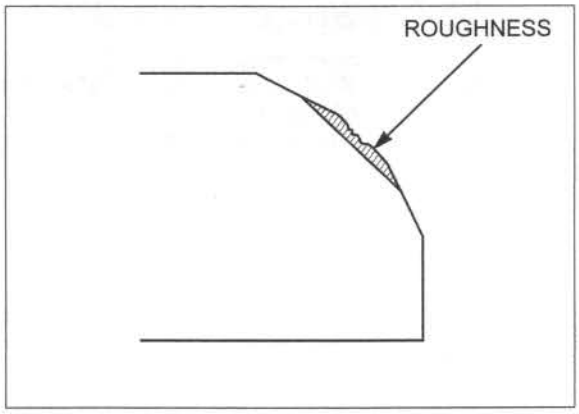

Use a 32° flat cutter, remove 1/4 of the existing valve seat material.

TOOLS:

IN:	
Flat cutter, 36 mm	**07780-0013500**
Cutter holder, 5.0 mm	**07781-0010400**
EX:	
Flat cutter, 33 mm	**07780-0012900**
Cutter holder, 5.0 mm	**07781-0010400**

or equivalent commercially available in U.S.A.

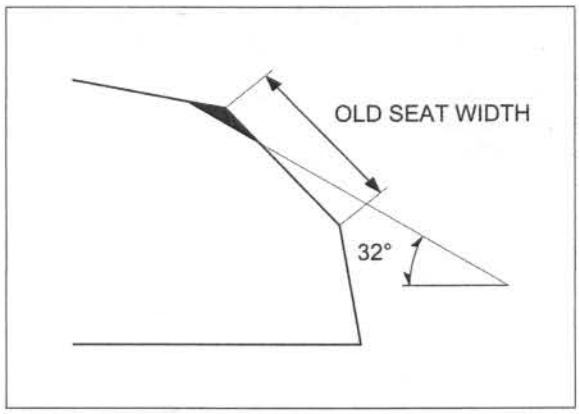

Use a 60° interior cutter, remove 1/4 of the existing valve seat material.

TOOLS:

IN:	
Interior cutter, 37.5 mm (IN)	**07780-0014100**
Cutter holder, 5.0 mm (IN)	**07781-0010400**
EX:	
Interior cutter, 34 mm (EX)	**07780-0014700**
Cutter holder, 5.0 mm (EX)	**07781-0010400**

or equivalent commercially available in U.S.A.

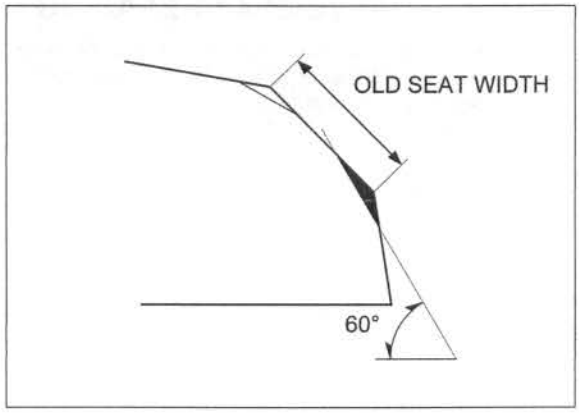

Using a 45° seat cutter, cut the seat to proper width.

Make sure all pitting and irregularities are removed. Refinish if necessary.

STANDARD:

IN: 1.1 – 1.3 mm (0.04 – 0.05 in)
EX: 1.3 – 1.5 mm (0.05 – 0.06 in)

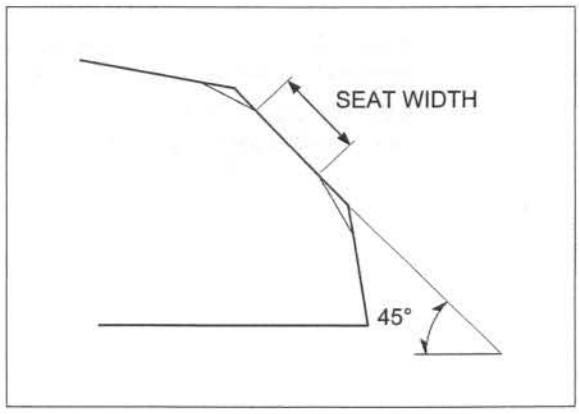

INTAKE SIDE:

After refacing, wash the cylinder head and valves.

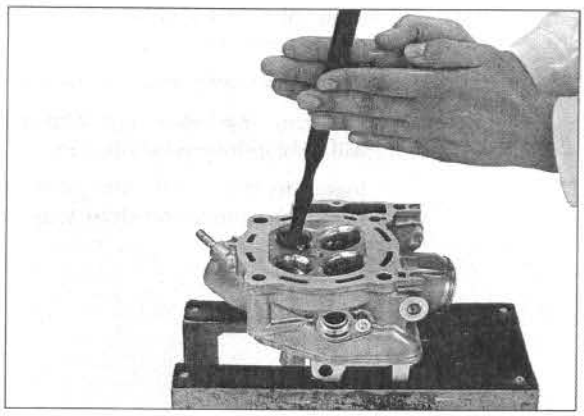

NOTICE

- *Do not lap the intake valves. They are titanium and have a thin oxide coating. Lapping will damage this coating.*
- *Use the intake valve as a new one.*

EXHAUST SIDE:

After cutting the exhaust seats, apply lapping compound to the exhaust valve face, and lap the exhaust valve using light pressure.

After lapping, wash any residual compound off the cylinder head and valves.

NOTICE

- *Excessive lapping pressure may deform or damage the seat.*
- *Change the angle of the lapping tool frequently to prevent uneven seat wear.*
- *Do not allow any lapping compound to enter the guides.*

CYLINDER HEAD ASSEMBLY

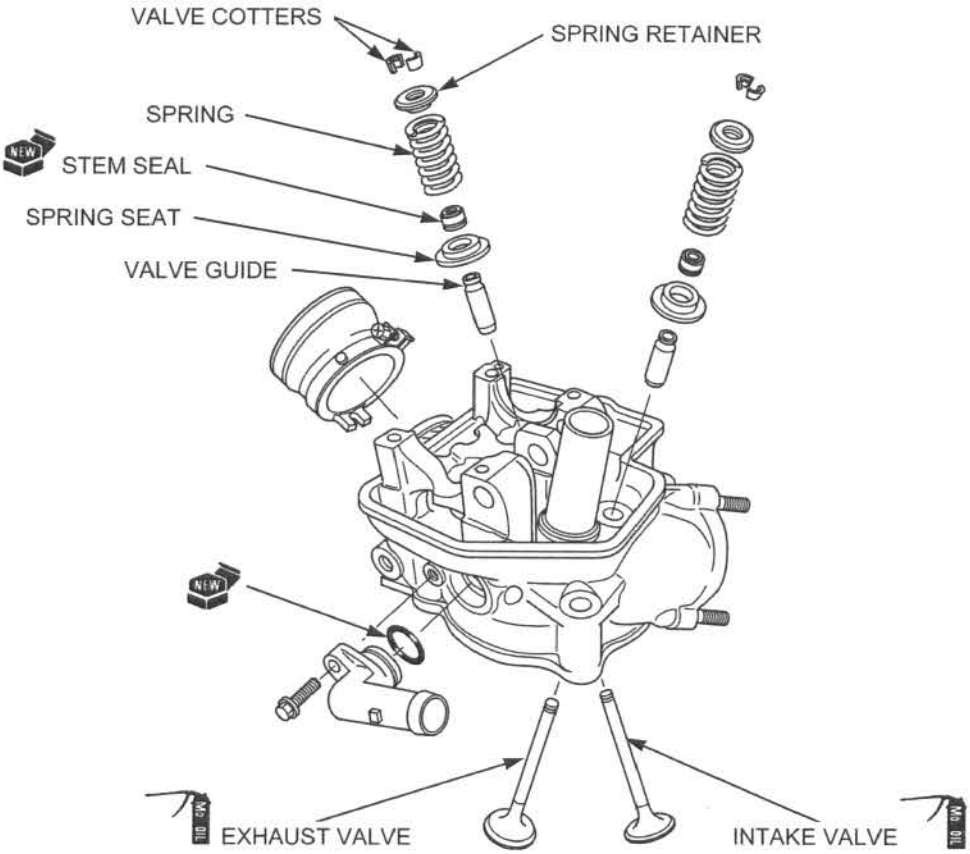

Blow out all oil passages in the cylinder head with compressed air.

Install the spring seat and new stem seal.

Lubricate the valve stem and stem end sliding surface with molybdenum oil solution.

Insert the valves into the guide while turning it slowly to avoid damage to the stem seal.

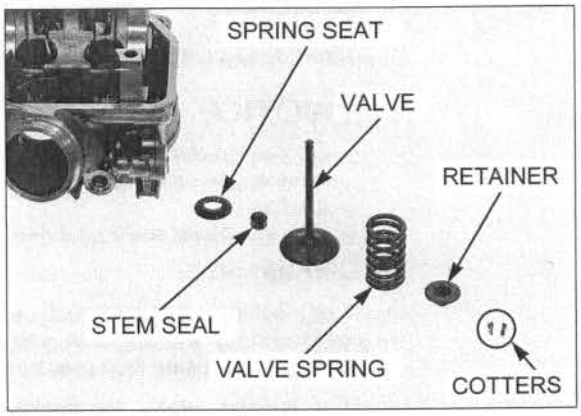

Note the valve spring identification marks.

- Intake valve spring: Orange paint
- Exhaust valve spring: Gray paint

Install the valve springs with the tightly wound coils facing the combustion chamber.

Install the spring retainer.

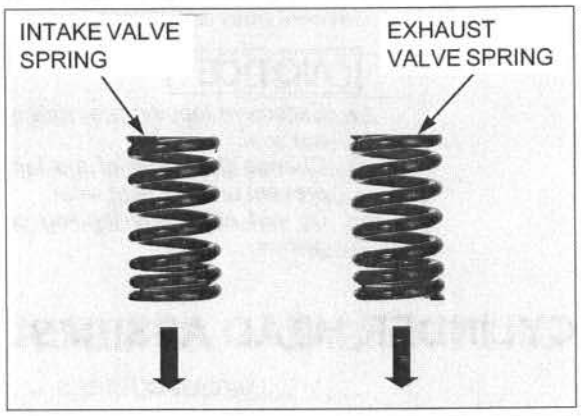

Install the tappet hole protector into the valve lifter bore.

TOOL:

Tappet hole protector	**07HMG-MR70002 not available in U.S.A.**

TOOL, U.S.A. only:
See instructions on page 9-20

To prevent loss of tension, do not compress the valve springs more than necessary.

Install the valve cotters using the special tools as shown.

- Grease the cotters to ease installation.

TOOLS:

Valve spring compressor	**07757-0010000**
Valve spring compressor attachment	**07959-KM30101**

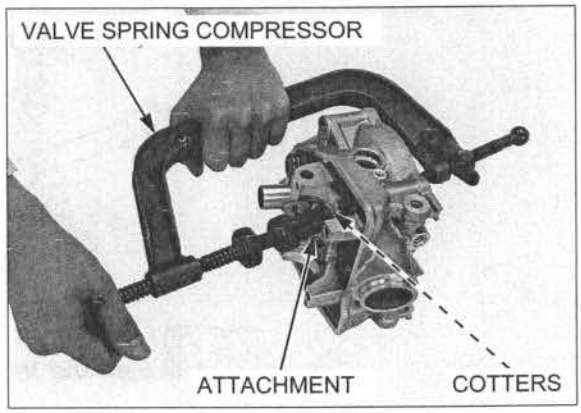

Support the cylinder head above the work bench surface to prevent possible valve damage.

Tap the valve stems gently with plastic hammer and shaft as shown to seat the cotters firmly.

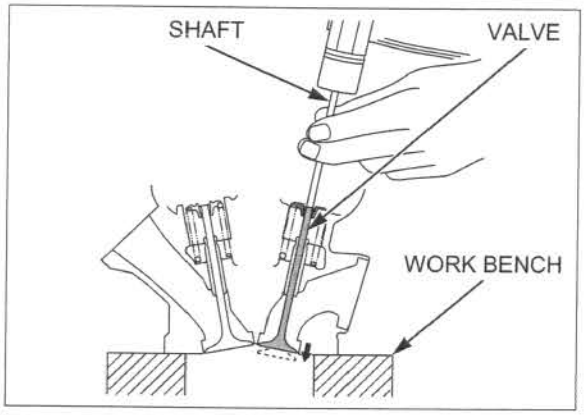

Install the insulator to the cylinder head by aligning the groove of the insulator with the tab of the cylinder head.

NOTE:

Install the insulator with its "TB UP" mark facing toward the throttle body side.

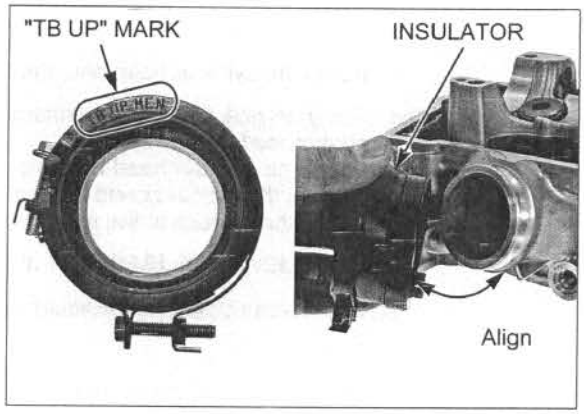

Align the insulator band hole with the insulator tab.

Tighten the insulator band screw to the specified range as shown.

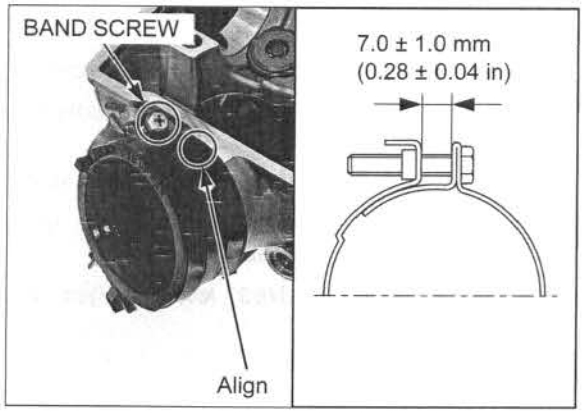

Install a new O-ring to the water hose joint.

Install the water hose joint to the cylinder head. Install and tighten the bolt securely.

Install the following:

- ECT sensor (page 6-58)
- Spark plug (page 4-11)
- Cylinder head (page 9-30)

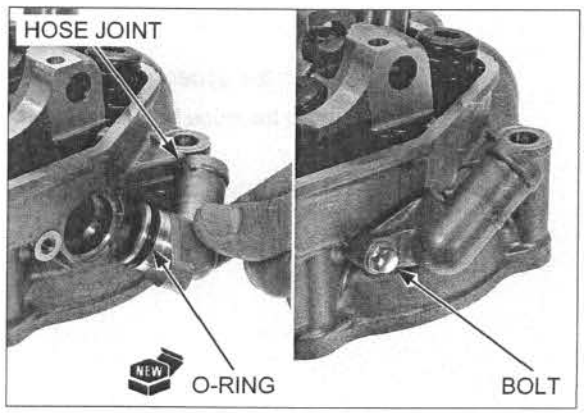

CYLINDER HEAD INSTALLATION

Install the dowel pins and a new gasket.

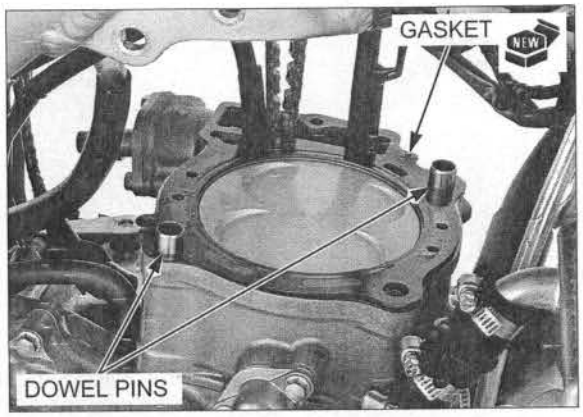

Install the cylinder head onto the cylinder.

Be careful not to let the washers drop into the left crankcase.

Apply engine oil to the cylinder head bolt threads and seating surface.

Install the cylinder head bolts with the washers.

Tighten the cylinder head bolts in a crisscross pattern in two or three steps to the specified torque.

TORQUE: 51 N·m (5.2 kgf·m, 38 lbf·ft)

Install and tighten the cylinder head 6 mm bolt.

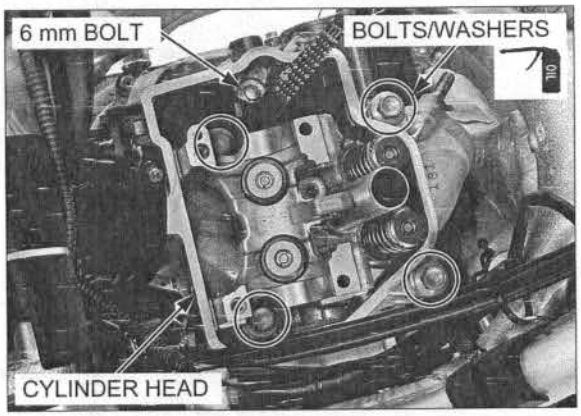

Install the cylinder head hanger plates and bolts.

Tighten the cylinder head hanger bolts to the specified torque.

TORQUE: 54 N·m (5.5 kgf·m, 40 lbf·ft)

Tighten the cylinder head hanger plate bolts to the specified torque.

TORQUE: 33 N·m (3.4 kgf·m, 24 lbf·ft)

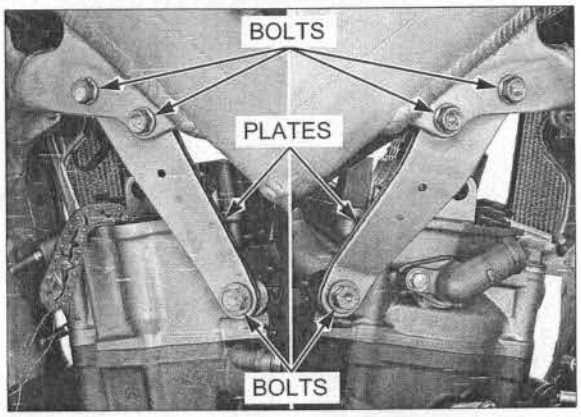

Connect the upper radiator hose to the water hose joint.

Tighten the hose band screw securely (page 7-11).

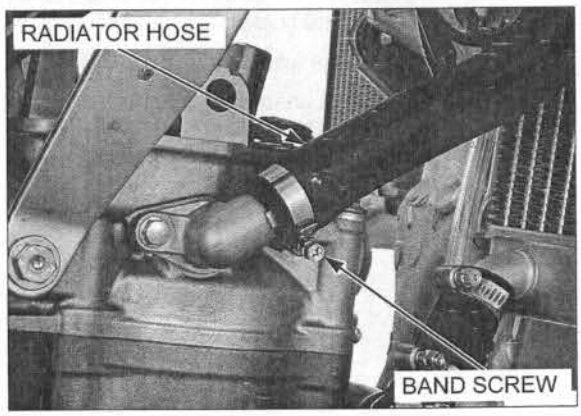

Connect the ECT sensor 2P (Black) connector.

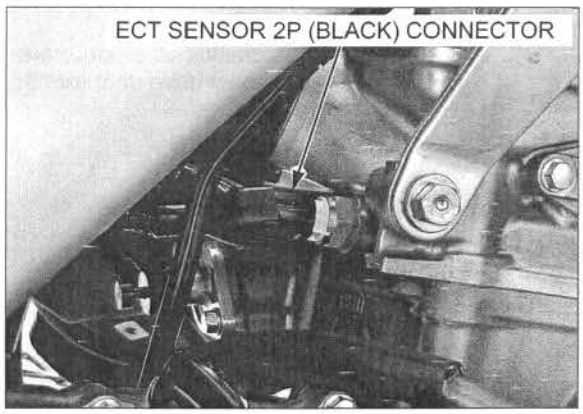

Apply molybdenum oil solution to the valve lifter bore outer surface.

Be careful not to let the shims drop into the left crankcase. Install the shims and valve lifters in their original location.

Install the shims and valve lifters.

Install the following:

- Rocker arm (page 9-31)
- Camshaft (page 9-31)
- Throttle body (page 6-50)
- Exhaust pipe (page 3-10)
- Ignition coil (page 17-13)

Fill the radiator with the recommended coolant mixture to the filler neck and bleed the air (page 7-7).

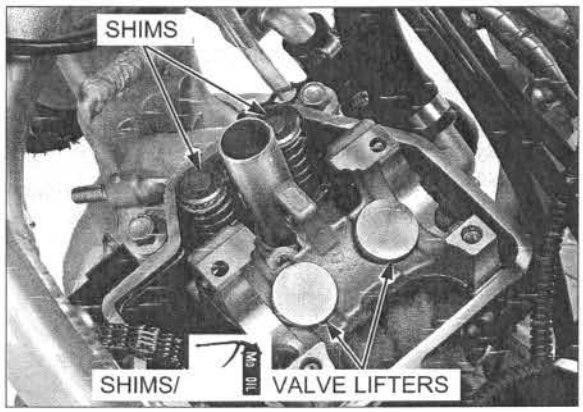

CAMSHAFT/ROCKER ARM INSTALLATION

ROCKER ARM

Each exhaust rocker arm has an identification mark, "ENL" is for left exhaust rocker arm, "ENR" is right exhaust rocker arm.

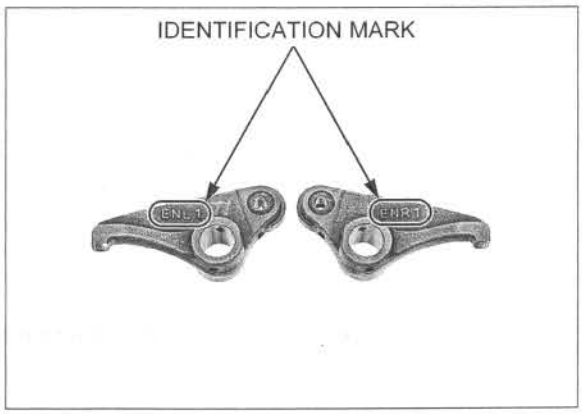

Apply molybdenum oil solution to the rocker arm inner surface and valve slipper surface.

Install the rocker arms onto the camshaft holder base.

Install the rocker arm shaft while aligning the camshaft holder bolt holes with the rocker arm shaft cut-outs.

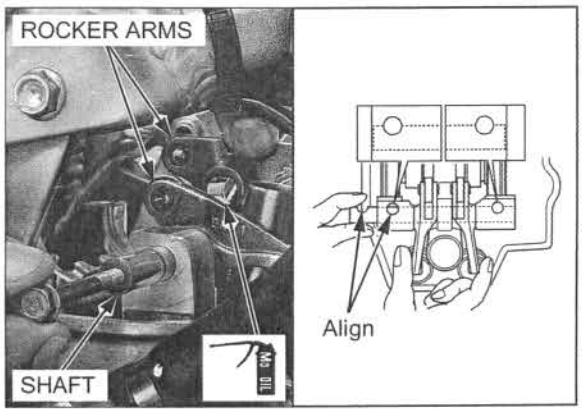

CAMSHAFT

Turn the crankshaft clockwise to align the punch mark on the primary drive gear with the "△" mark on the right crankcase cover.

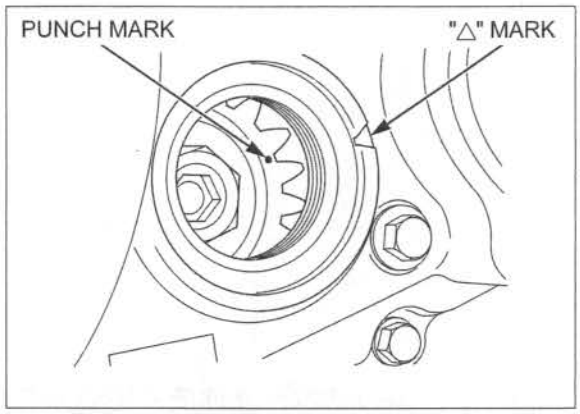

Apply molybdenum oil solution to the camshaft cam lobes.

Install the camshaft with the intake cam lobes facing up.

Install the camshaft while installing the cam chain onto the cam sprocket.

Slide the cam sprocket side camshaft bearing until it is fully seated to the camshaft.

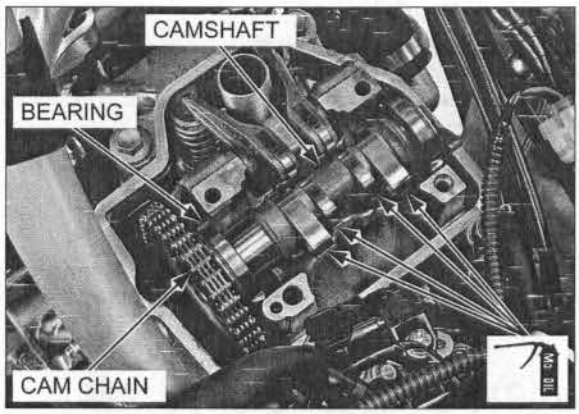

Align the index line on the cam sprocket with the top surface of the camshaft holder base.

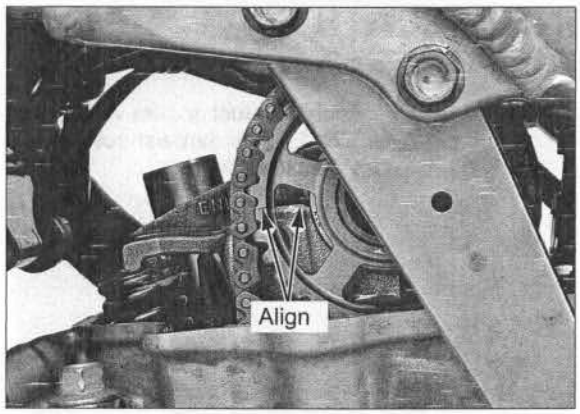

Install the set rings onto the camshaft bearings.

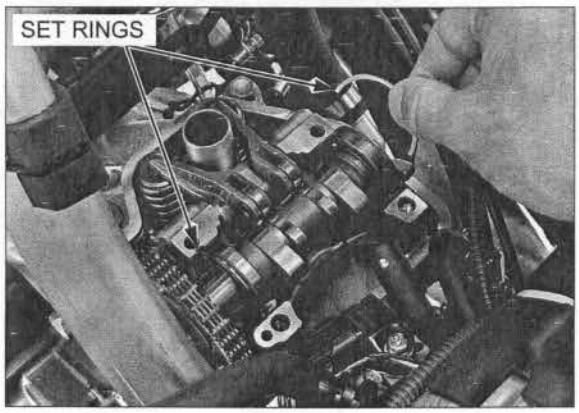

Install the camshaft holder by aligning its grooves with the set rings and dowel pins with the camshaft holder base holes.

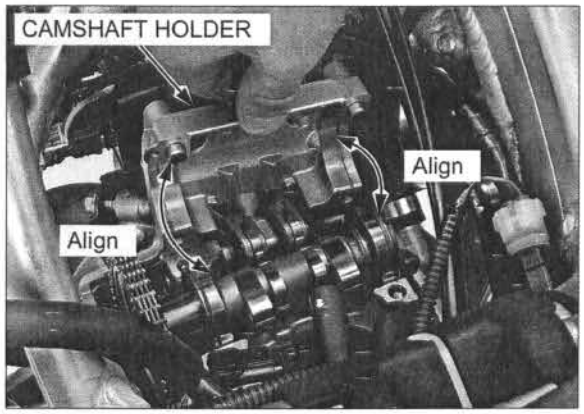

Apply engine oil to the camshaft holder mounting bolt threads.

When installing the exhaust side camshaft holder mounting bolts through the rocker arm shaft cut-outs.

Install and tighten the camshaft holder mounting bolt to the specified torque.

TORQUE: 14 N·m (1.4 kgf·m, 10 lbf·ft)

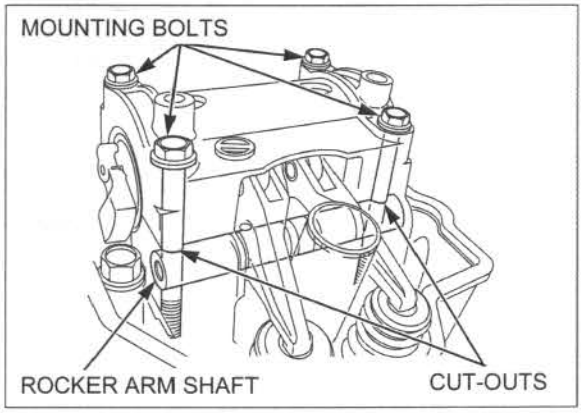

Remove the stopper tool from the cam chain tensioner lifter.

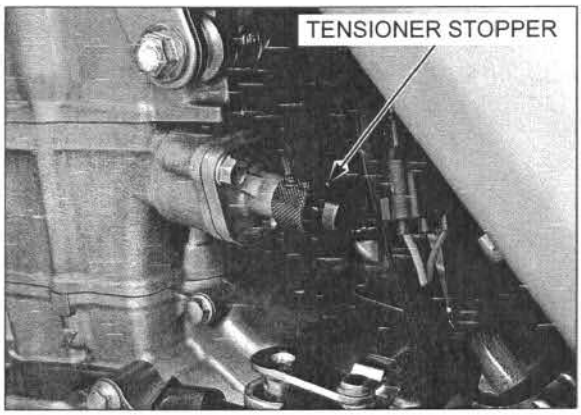

Make sure the index line on the cam sprocket align with the cut-out on the camshaft holder.

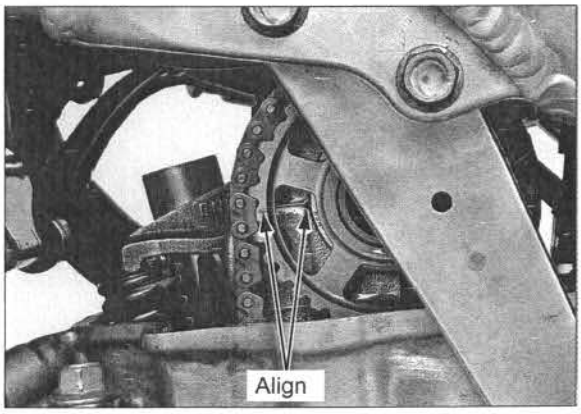

Install the cam chain tensioner lifter bolt with a new sealing washer.
Tighten the cam chain tensioner lifter bolt securely.

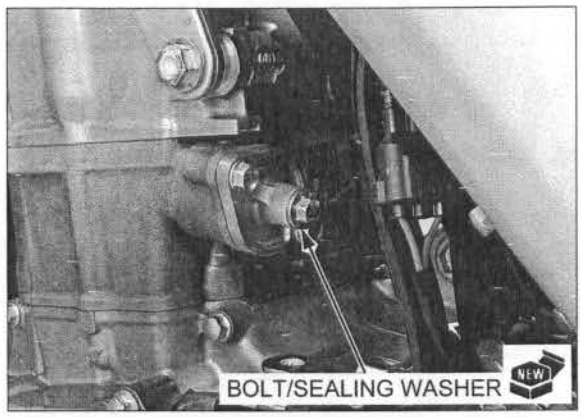

Apply engine oil to a new O-ring, and install it to the crankshaft hole cap.
Apply grease to the crankshaft hole cap threads.

Install the crankshaft hole cap and tighten it to the specified torque.

TORQUE: 15 N·m (1.5 kgf·m, 11 lbf·ft)

Install the cylinder head cover (page 9-8).

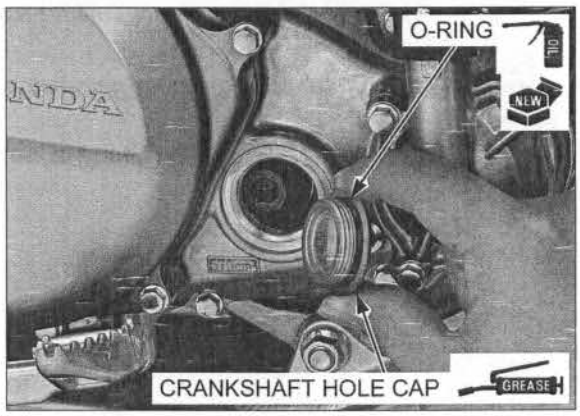

10. CYLINDER/PISTON

COMPONENT LOCATION

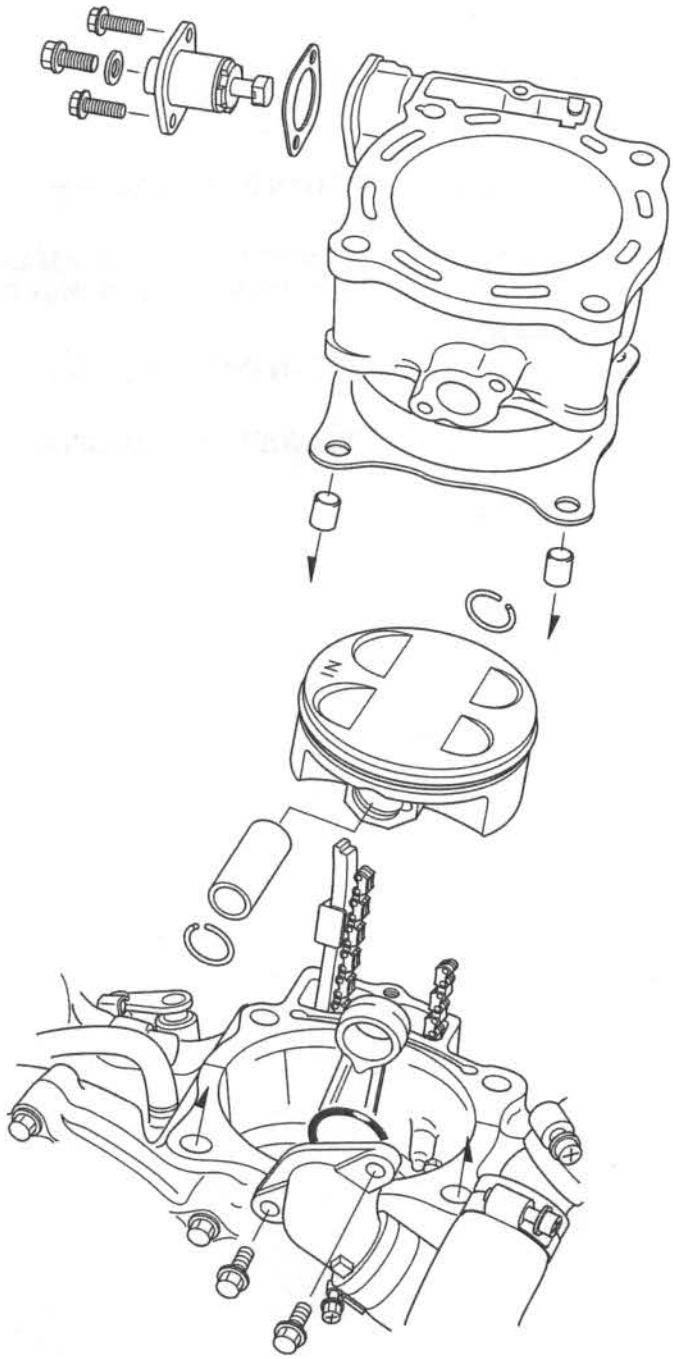

SERVICE INFORMATION

GENERAL

- This section covers maintenance of the cylinder and piston. These procedures can be done with the engine installed in the frame.
- Before disassembly, clean the engine thoroughly to prevent dirt from entering it.
- Be careful not to damage the mating surfaces when removing the cylinder. For example, do not use a screwdriver to pry the cylinder.
- Clean all disassembled parts with cleaning solvent before inspection, use compressed air to dry the parts.
- Under racing conditions, the piston and piston rings should be replaced after every 6 races or about 15 hours of operation. Replace the piston pin after every 12 races or about 30 hours of operation.

SPECIFICATIONS

Unit: mm (in)

ITEM			STANDARD	SERVICE LIMIT
Cylinder	I.D.		96.000 – 96.015 (3.7795 – 3.7801)	96.025 (3.7805)
	Out-of-round		–	0.010 (0.0004)
	Taper		–	0.010 (0.0004)
	Warpage		–	0.05 (0.002)
Piston, piston ring	Piston mark direction		"IN" mark facing toward the intake side	–
	Piston O.D.		95.970 – 95.980 (3.7783 – 3.7787)	95.940 (3.7772)
	Piston O.D. measurement point		7.0 (0.30) from the bottom of skirt	–
	Piston pin bore I.D.		19.002 – 19.008 (0.7481 – 0.7483)	19.03 (0.749)
	Piston pin O.D.		18.994 – 19.000 (0.7478 – 0.7480)	18.99 (0.748)
	Piston-to-piston pin clearance		0.002 – 0.014 (0.0001 – 0.0006)	0.04 (0.002)
	Top ring mark		"R" mark side facing up	–
	Piston ring-to-ring groove clearance	Top	0.065 – 0.100 (0.0026 – 0.0039)	0.12 (0.004)
	Piston ring end gap	Top ring	0.25 – 0.31 (0.010 – 0.012)	0.32 (0.013)
		Oil ring (side rail)	0.20 – 0.70 (0.008 – 0.028)	0.71 (0.028)
Cylinder-to-piston clearance			0.020 – 0.045 (0.0008 – 0.0018)	0.085 (0.0033)
Connecting rod small end I.D.			19.016 – 19.038 (0.7487 – 0.7495)	19.05 (0.750)
Connecting rod-to-piston pin clearance			0.016 – 0.044 (0.0006 – 0.0017)	0.06 (0.002)

TOOL

Cam chain tensioner holder
070MG-0010100

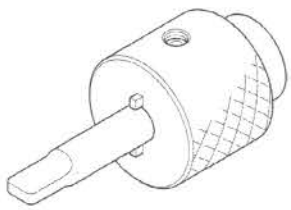

or 07AMG-001A100 (U.S.A. only)

TROUBLESHOOTING

- Engine top-end problems usually affect engine performance. These problems can be diagnosed by a compression test or by tracing engine noise to the top-end with a sounding rod stethoscope.
- If the performance is poor at low speeds, check for white smoke in the crankcase and cylinder head breather hose. If the hose is smoky, check for a seized piston rings.

Compression too low, hard starting or poor performance at low speeds
- Leaking or damaged cylinder head gasket
- Worn, stuck or broken piston rings
- Worn or damaged cylinder and piston
- Loose spark plug

Compression too high, over-heating or knocking
- Excessive carbon build-up in on piston head or combustion chamber

Abnormal noise
- Worn cylinder and piston
- Worn piston pin or piston pin hole
- Worn connecting rod small end
- Worn connecting rod big end bearing (page 13-21)

Excessive smoke
- Faulty cylinder, piston and piston rings
- Improper installation of piston rings
- Scored or scratched piston or cylinder wall

CYLINDER REMOVAL

Remove the cylinder head (page 9-17).

Remove the cam chain guide.

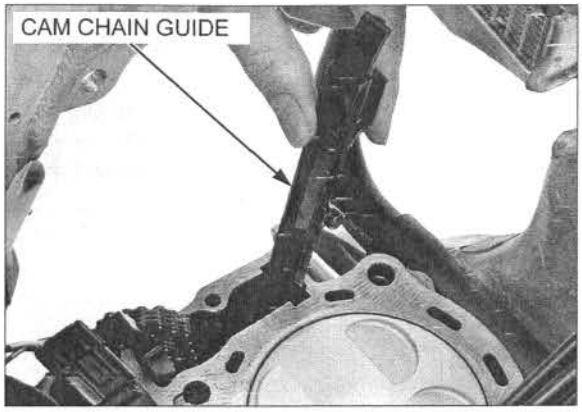

Remove the bolts and water hose joint and O-ring.

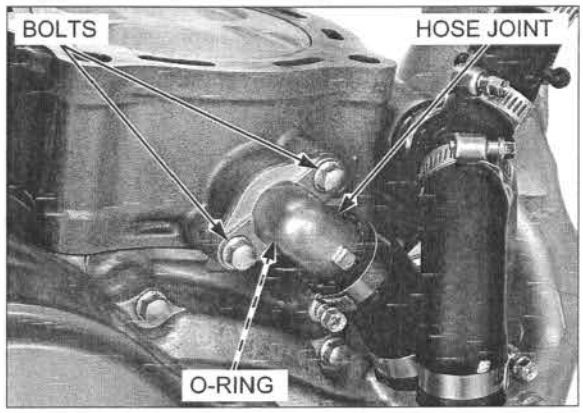

Remove the cam chain tensioner holder.
Remove the bolts, cam chain tensioner lifter and gasket.

TOOL:

Cam chain tensioner holder	**070MG-0010100 or 07AMG-001A100 (U.S.A. only)**

Remove the cylinder.

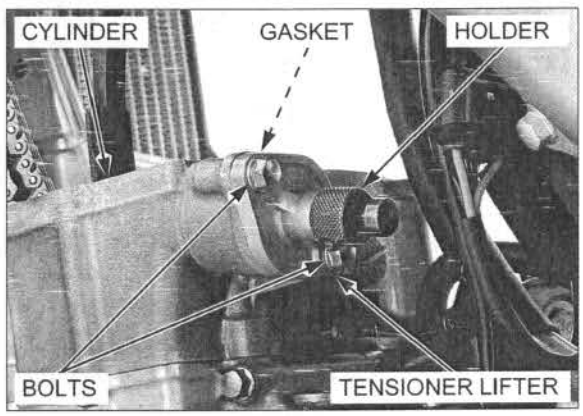

Remove the dowel pins and gasket.

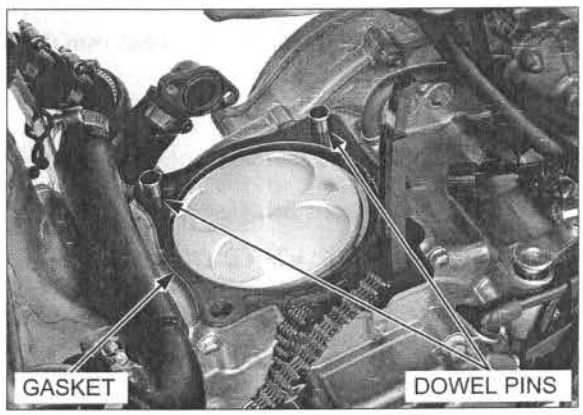

PISTON REMOVAL

Place a clean shop towel over the crankcase to prevent the piston pin clip from dropping into the crankcase.

Remove the piston pin clips with pliers.

Press the piston pin out of the piston and remove the piston.

- Under racing conditions, the piston, piston pin and piston rings should be replaced according to the maintenance schedule (page 4-4).

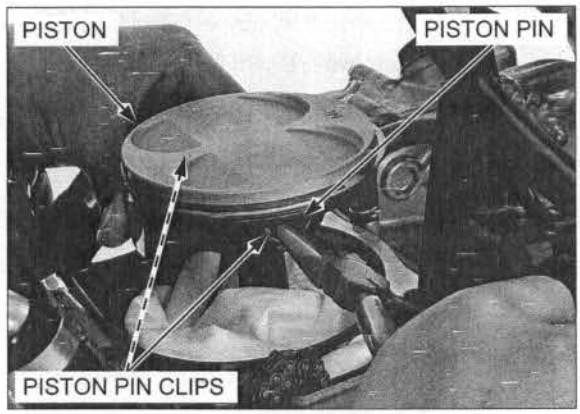

Piston rings are easily broken; take care not to damage them during removal.

Spread the piston rings, and remove them by lifting up at a point just opposite the gap.

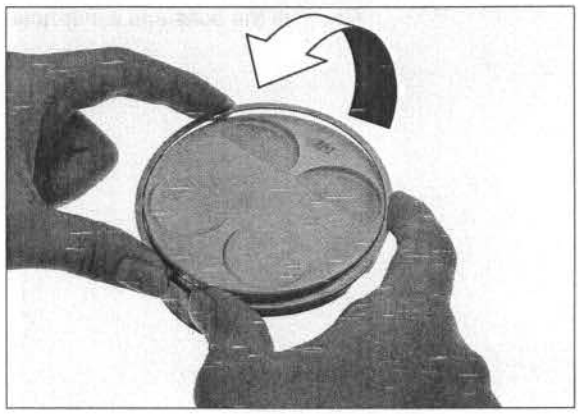

CYLINDER/PISTON/CAM CHAIN TENSIONER LIFTER INSPECTION

CYLINDER

Inspect the cylinder bore for wear or damage.
Measure the cylinder I.D. in the X and Y axis at three levels.
Take the maximum reading to determine the cylinder wear.

SERVICE LIMIT: 96.025 mm (3.7805 in)

Calculate the cylinder-to-piston clearance.
Take a maximum reading to determine the clearance.

For piston O.D. (page 10-7).

SERVICE LIMIT: 0.085 mm (0.0033 in)

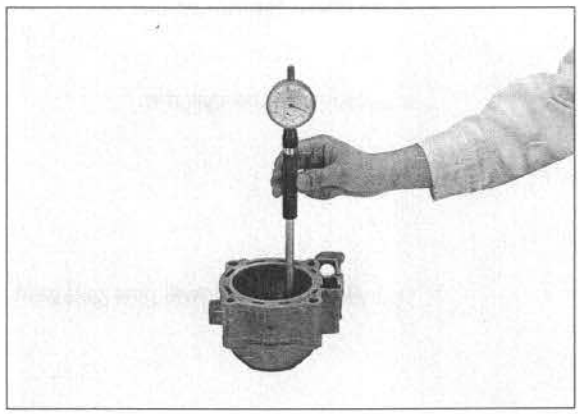

Calculate the taper and out-of-round at three levels in the X and Y axis. Take the maximum reading to determine the cylinder condition.

SERVICE LIMITS:
Taper: 0.010 mm (0.0004 in)
Out-of-round: 0.010 mm (0.0004 in)

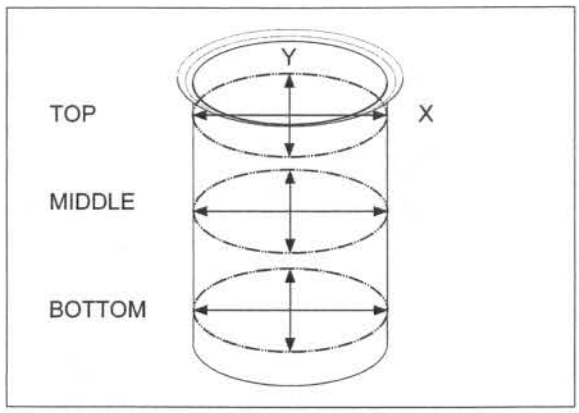

Inspect the top of the cylinder for warpage.

SERVICE LIMIT: 0.05 mm (0.002 in)

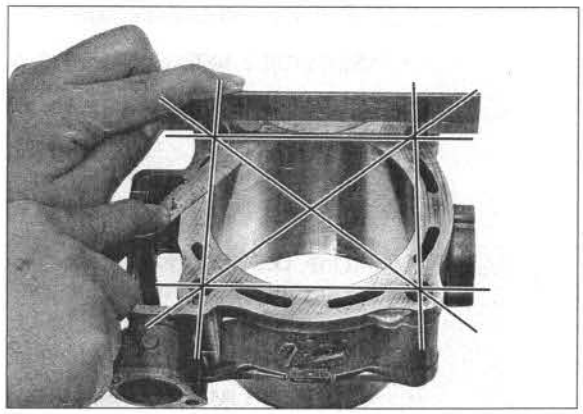

PISTON/PISTON PIN/PISTON RING

Never use a wire brush; it will scratch the groove.

Remove the carbon deposits from the piston head and piston ring grooves with the used piston ring.

Inspect the piston for damage and piston ring grooves for wear.

Replace the piston if necessary.

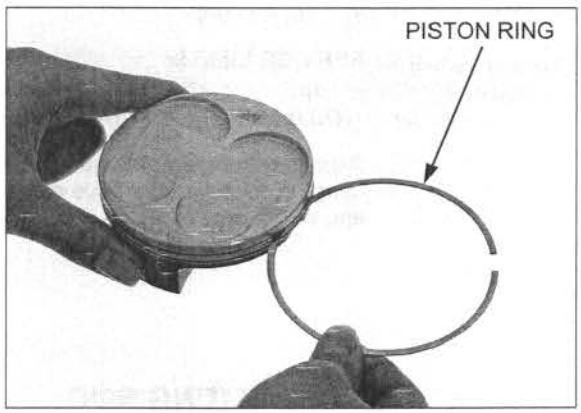

Temporarily install the piston ring to its proper position with the mark facing up.
Inspect the piston ring for free movement by rotating it in its grooves. The ring should be able to move freely without catching.

Push the ring until the outer surface of the piston ring is nearly flush with the piston and measure the piston ring-to-groove clearance.

SERVICE LIMIT: 0.12 mm (0.004 in)

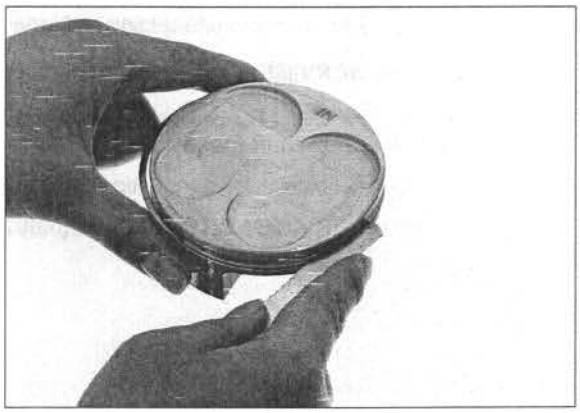

Measure the diameter of the piston at 7.0 mm (0.30 in) from the bottom and 90° to the piston pin hole.

SERVICE LIMIT: 95.940 mm (3.7772 in)

If the O.D. is under the service limit or nearly 15.0 hours of running time have elapsed, replace the piston with a new one.

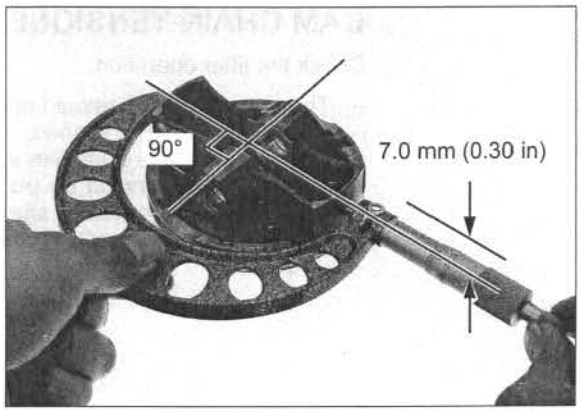

Measure the piston pin bore I.D.

SERVICE LIMIT: 19.03 mm (0.749 in)

Check the piston pin for wear and excessive discoloration.

Measure the piston pin O.D.

SERVICE LIMIT: 18.99 mm (0.748 in)

If the O.D. is under the service limit, discolored, or nearly 30.0 hours of running time have elapsed, replace the piston pin.

Calculate the piston-to-piston pin clearance.

SERVICE LIMIT: 0.04 mm (0.002 in)

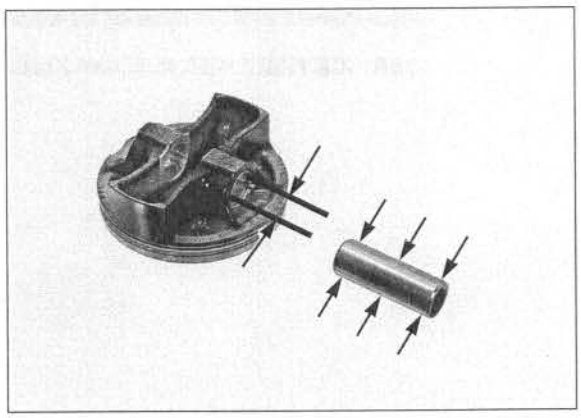

Push the ring into the cylinder with the top of the piston to be sure the ring is squarely in the cylinder.

Insert each piston ring into the cylinder and measure the ring end gap.

SERVICE LIMITS:

Top:	**0.32 mm (0.013 in)**
Oil (side rail):	**0.71 mm (0.028 in)**

If the ring end gap under the service limit or nearly 15.0 hours of running time have elapsed, replace the piston ring with a new one.

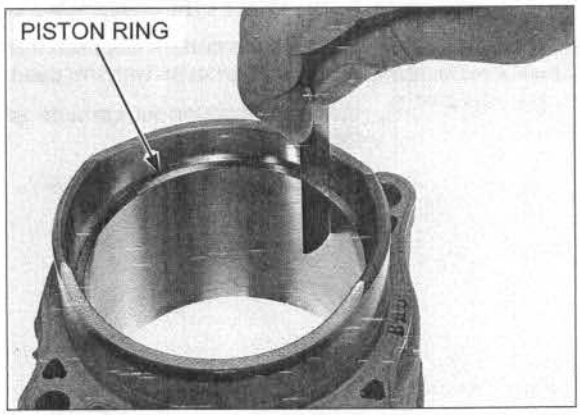

CONNECTING ROD

Measure the connecting rod small end I.D.

SERVICE LIMIT: 19.05 mm (0.750 in)

If the I.D. is over the service limit, replace the crankshaft (page 13-21).

Calculate the connecting rod-to-piston pin clearance.

SERVICE LIMIT: 0.06 mm (0.002 in)

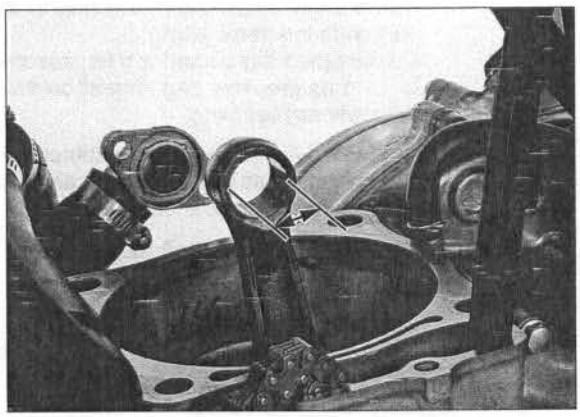

CAM CHAIN TENSIONER LIFTER

Check the lifter operation:

- The tensioner shaft should not go into the tensioner lifter body when it is pushed.
- When it is turned clockwise with a screwdriver, the tensioner shaft should be pulled into the tensioner lifter body. The tensioner shaft should spring out of the tensioner lifter body as soon as the screwdriver is released.

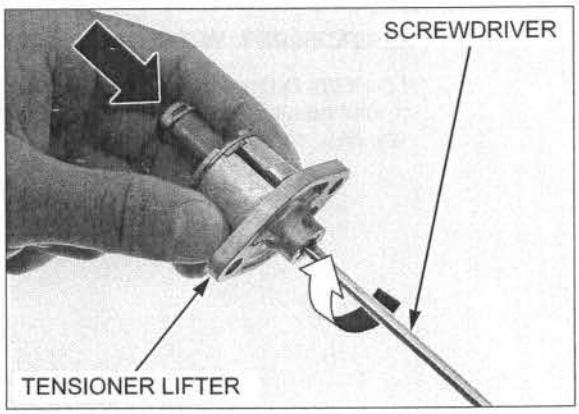

PISTON INSTALLATION

Clean the piston ring grooves thoroughly.

Install the top ring on the piston with the marked side facing up.

Apply engine oil to the piston rings, and install them as shown.

- Do not damage the piston ring by spreading the ends too far.
- Be careful not to damage the piston during piston ring installation.
- Do not align the oil ring (side rails) gaps.
- Space the oil ring end 90° apart.

After installation, the rings should rotate freely in the piston ring grooves.

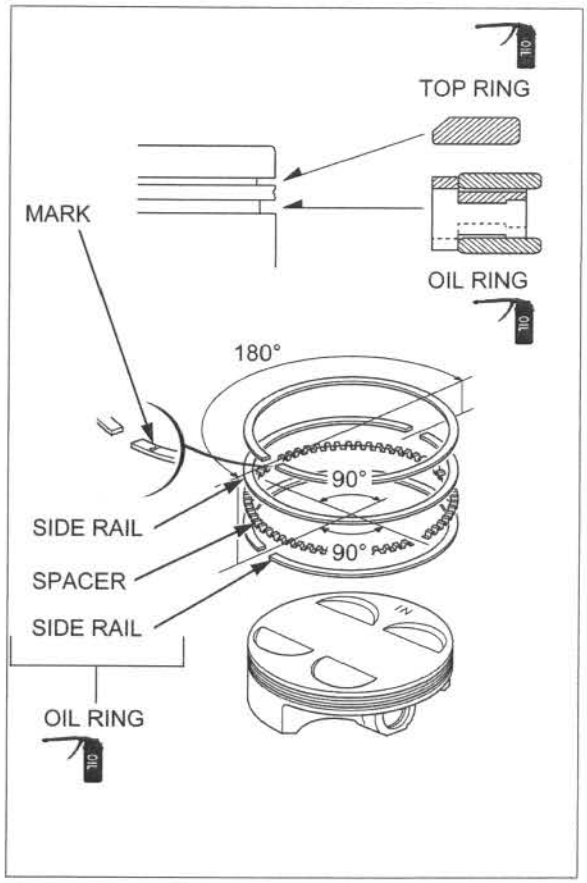

When cleaning the cylinder mating surface, place a shop towel over the cylinder opening to prevent dust or dirt from entering the crankcase.

Clean any gasket material from the cylinder mating surfaces of the crankcase.

Apply molybdenum oil solution to the connecting rod small end inner surface.

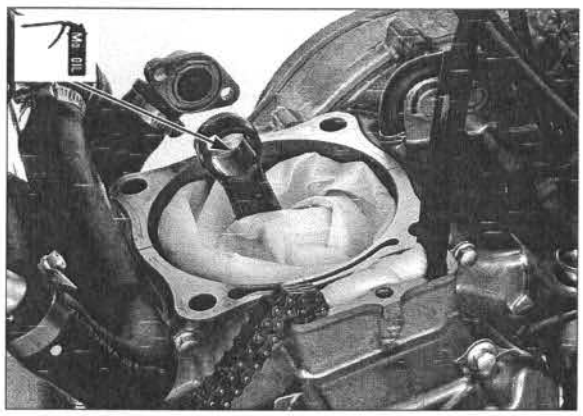

Apply engine oil to the piston pin outer surface and piston hole of the piston.

Install the piston with the "IN" mark facing intake side.

Install the piston pin and new piston pin clips.

- Do not align the piston pin clip end gap with the piston cut-out.
- Always use new piston pin clips. Reinstalling used piston pin clips may lead to serious engine damage.

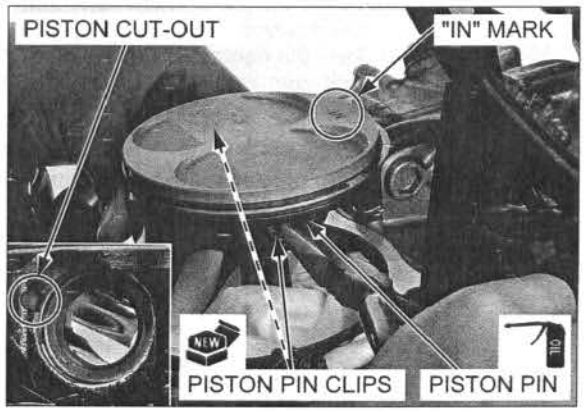

CYLINDER INSTALLATION

Install the dowel pins and new gasket.

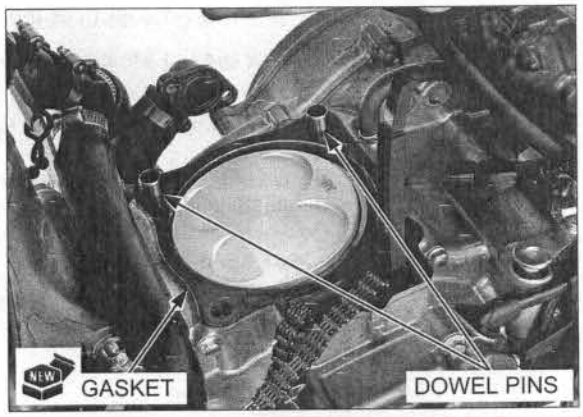

Be careful not to damage the piston ring and cylinder wall.

Apply engine oil to the cylinder bore, piston outer surface and piston rings.

Route the cam chain through the cylinder, and install the cylinder while compressing the piston rings.

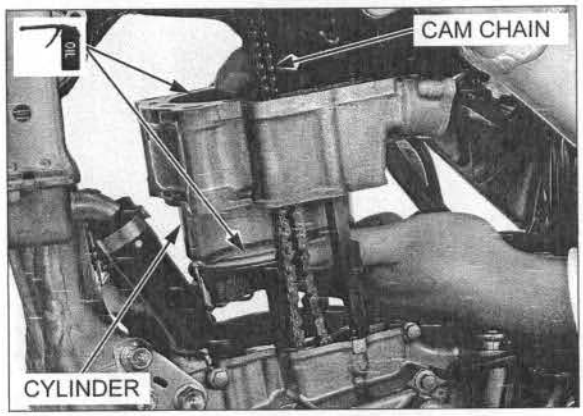

Install a new gasket, cam chain tensioner lifter.

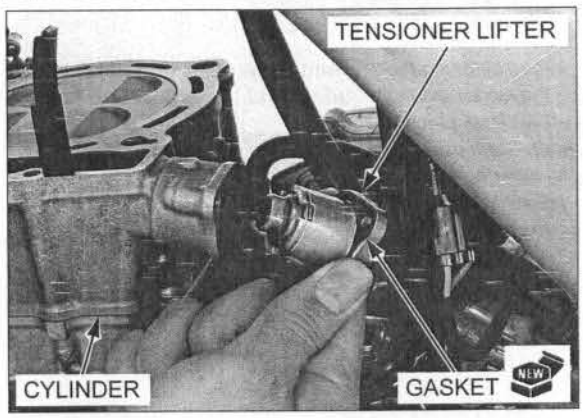

Install and tighten the bolts securely.

Insert the cam chain tensioner holder into the cam chain tensioner lifter.
Turn the cam chain tensioner holder clockwise fully and lock the cam chain tensioner lifter by pushing the handle.

TOOL:

Cam chain tensioner holder	**070MG-0010100 or 07AMG-001A100 (U.S.A. only)**

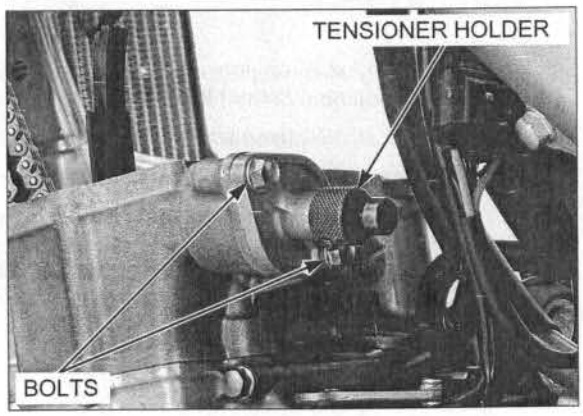

Apply engine oil to a new O-ring and install it to the water hose joint groove.

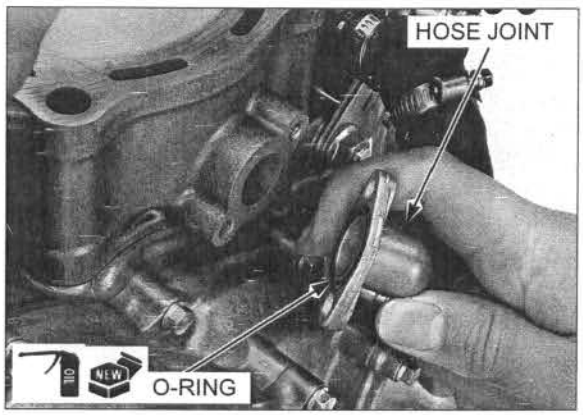

Set the water hose joint to the cylinder.

Install and tighten the bolts securely.

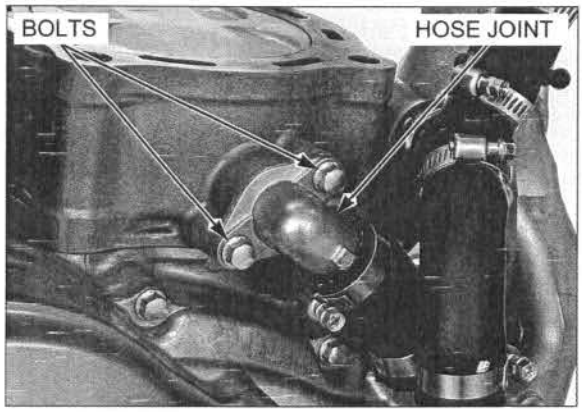

Install the cam chain guide by aligning its tabs with the grooves in the cylinder and guide end with the groove in the crankcase.

Install the cylinder head (page 9-30).

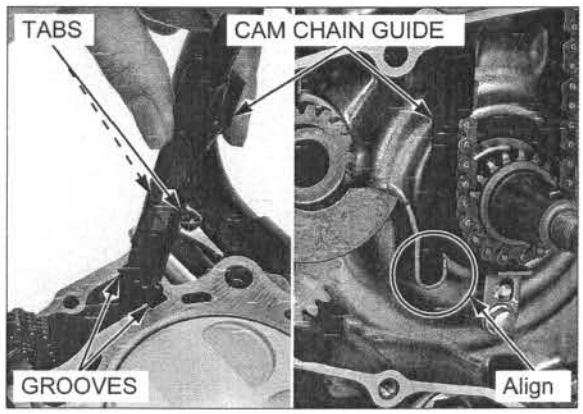

MEMO

11. CLUTCH/KICKSTARTER/GEARSHIFT LINKAGE

COMPONENT LOCATION

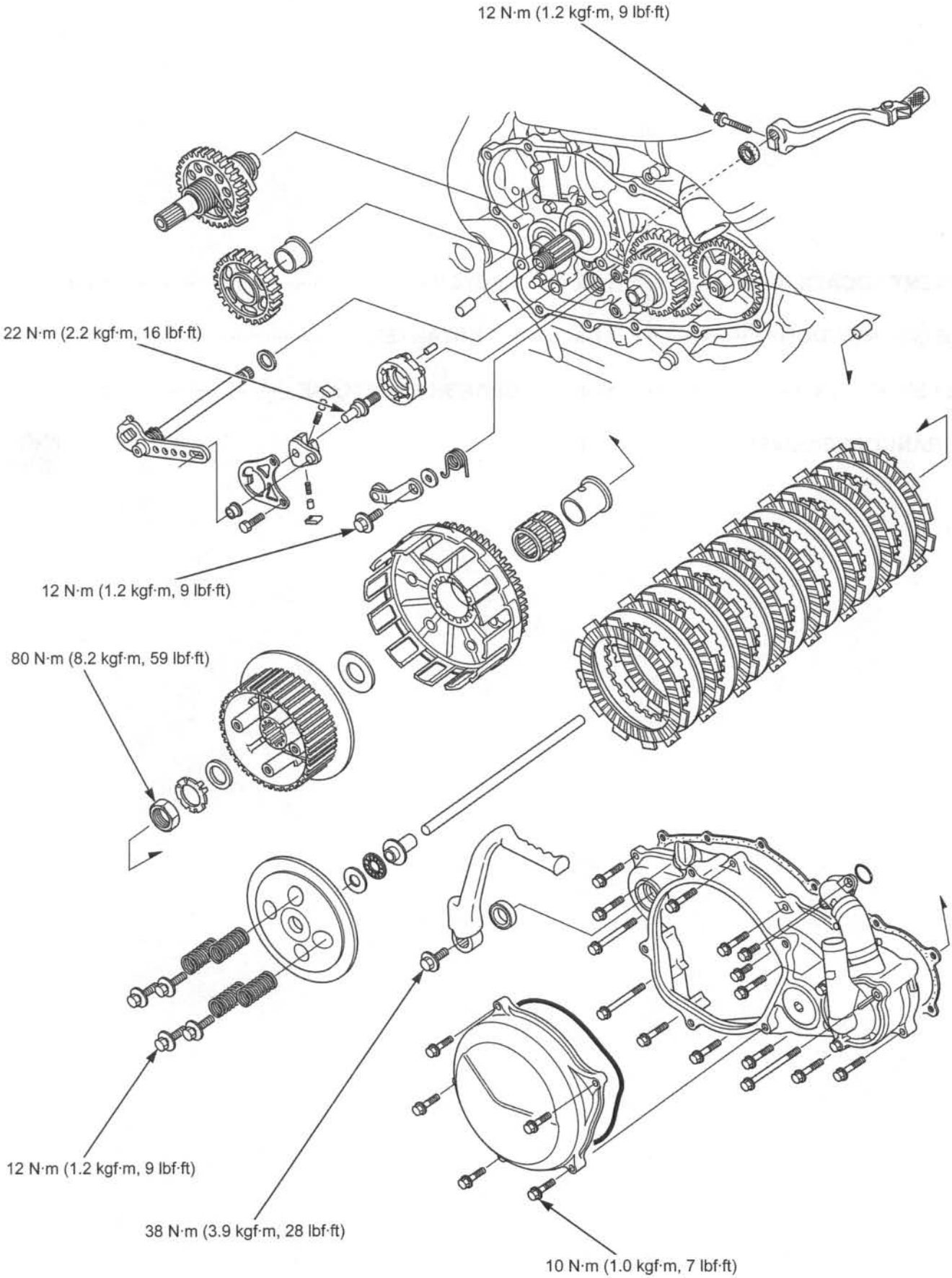

SERVICE INFORMATION

GENERAL

- This section covers service of the clutch, kickstarter and gearshift linkage. All service can be done with the engine installed in the frame.
- Transmission oil viscosity and level have an effect on clutch disengagement. Oil additives also effect clutch performance and are not recommended. When the clutch does not disengage or the motorcycle creeps with the clutch lever pulled in, inspect the transmission oil level before servicing the clutch system.
- The clutch discs/plates can be serviced without removing the right crankcase cover.
- Replace the transmission oil, if the clutch discs and plates are replaced.

SPECIFICATIONS

Unit: mm (in)

ITEM		STANDARD	SERVICE LIMIT
Clutch lever freeplay		10 – 20 (3/8 – 13/16)	–
Clutch spring free length		47.9 (1.89)	–
Clutch disc thickness		2.92 – 3.08 (0.115 – 0.121)	2.85 (0.112)
Clutch plate warpage		–	0.15 (0.006)
Kickstarter pinion gear I.D.		22.007 – 22.028 (0.8664 – 0.8672)	22.05 (0.868)
Kickstarter pinion gear bushing	I.D.	20.000 – 20.021 (0.7874 – 0.7882)	20.04 (0.789)
	O.D.	21.979 – 22.000 (0.8653 – 0.8661)	21.96 (0.865)
Kickstarter spindle O.D.		19.980 – 19.993 (0.7866 – 0.7871)	19.97 (0.786)
Kickstarter idle gear I.D.		20.020 – 20.041 (0.7882 – 0.7890)	20.07 (0.790)
Kickstarter idle gear bushing	I.D.	17.000 – 17.018 (0.6693 – 0.6700)	17.04 (0.671)
	O.D.	19.979 – 20.000 (0.7866 – 0.7874)	19.96 (0.786)
Countershaft O.D. at kickstarter idle gear bushing		16.966 – 16.984 (0.6680 – 0.6687)	16.95 (0.667)

TORQUE VALUES

Clutch center lock nut	80 N·m (8.2 kgf·m, 59 lbf·ft)	Apply engine oil to the threads and seating surface.
Clutch spring bolt	12 N·m (1.2 kgf·m, 9 lbf·ft)	
Clutch cover bolt	10 N·m (1.0 kgf·m, 7 lbf·ft)	
Gearshift drum center pin	22 N·m (2.2 kgf·m, 16 lbf·ft)	Apply locking agent to the threads (page 11-23).
Gearshift drum stopper arm bolt	12 N·m (1.2 kgf·m, 9 lbf·ft)	
Kickstarter pedal bolt	38 N·m (3.9 kgf·m, 28 lbf·ft)	
Gearshift pedal pinch bolt	12 N·m (1.2 kgf·m, 9 lbf·ft)	
Left crankcase cover bolt	12 N·m (1.2 kgf·m, 9 lbf·ft)	

TOOLS

Clutch center holder 07724-0050002 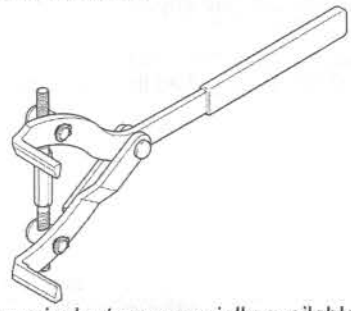 or equivalent commercially available in U.S.A.	Bearing remover, 12 mm 07936-166010A (U.S.A. only) 	Bearing remover set, 12 mm 07936-1660101 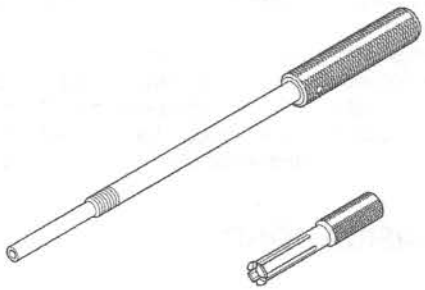 Not available in U.S.A.
Remover weight 07741-0010201 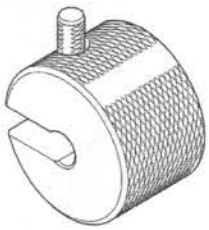 or 07936-371020A (U.S.A. only)	Remover head, 12 mm 07936-1660110 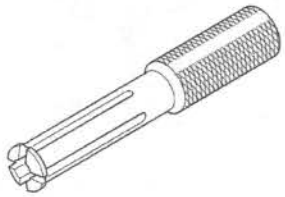 Not available in U.S.A.	Remover shaft 07936-1660120 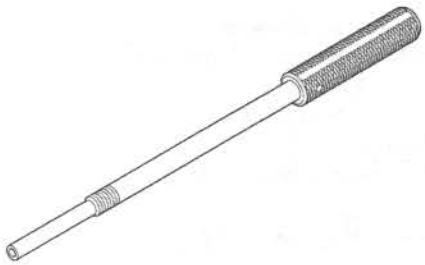 Not available in U.S.A.
Remover handle 07936-3710100 (U.S.A. only) 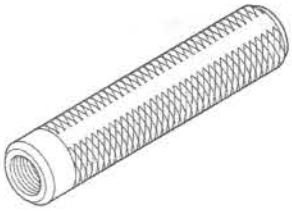	Pilot, 16 mm 07746-0041300 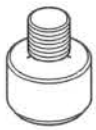	Driver 07749-0010000 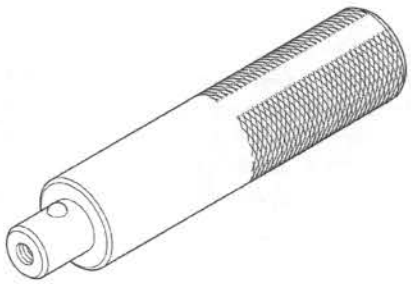
Needle bearing driver 07AMD-MENA200 (U.S.A. only) 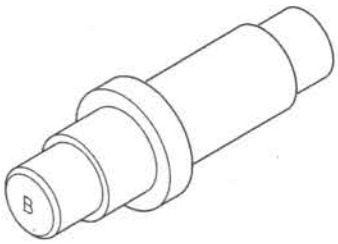		

TROUBLESHOOTING

Clutch will not disengage or motorcycle creeps with clutch disengaged
- Clutch plate warped
- Loose clutch center lock nut
- Oil level too high
- Improper oil viscosity
- Damaged clutch lifter mechanism
- Clutch lifter piece installed improperly

Hard to shift
- Incorrect clutch cable freeplay adjustment
- Incorrect transmission oil viscosity (page 4-18)
- Bent shift fork (page 13-17)
- Bent shift fork shaft (page 13-18)
- Bent shift fork claw (page 13-17)
- Damaged gearshift drum guide grooves (page 13-18)
- Bent gearshift spindle
- Loose stopper arm bolt
- Damaged stopper arm and pin
- Damaged gearshift spindle

Clutch lever is too hard to pull in
- Damaged clutch lifter mechanism
- Faulty clutch lifter needle bearing
- Clutch lifter piece installed improperly

Transmission jumps out of gear
- Worn gearshift drum stopper arm
- Weak or broken gearshift arm return spring
- Loose stopper arm bolt
- Bent shift fork shaft (page 13-18)
- Damaged gearshift drum guide grooves (page 13-18)
- Damaged or bent shift fork (page 13-17)
- Worn gear engagement dogs or slots (page 13-16)

Gearshift pedal will not return
- Weak or broken gearshift spindle return spring
- Bent gearshift spindle

Clutch slips when accelerating
- Incorrect clutch adjustment
- Worn clutch discs
- Weak clutch springs
- Transmission oil mixed with molybdenum or graphite additives

Motorcycle creeps with the engine idling
- Incorrect clutch adjustment
- Clutch plate warped
- Faulty clutch lifter
- Incorrect transmission oil

RIGHT CRANKCASE COVER

REMOVAL

Drain the coolant (page 7-8).
Drain the transmission oil (page 4-18).

Remove the brake pedal pivot bolt (page 16-29).

When removing the kickstarter pedal, mark the pedal position to ensure correct reassembly in its original location.

Remove the kickstarter pedal bolt and kickstarter pedal.

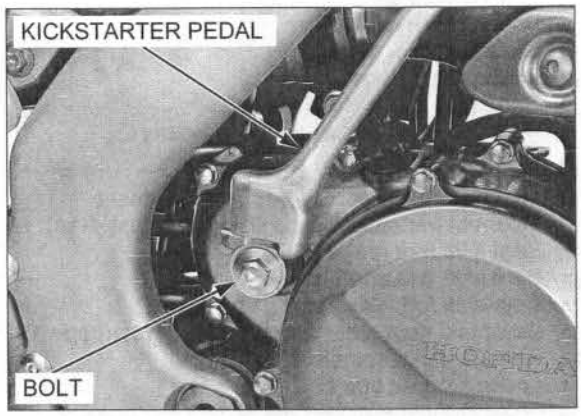

Loosen the hose band screw, and disconnect the lower radiator hose from the water pump cover.

Remove the water hose joint bolts from the cylinder.

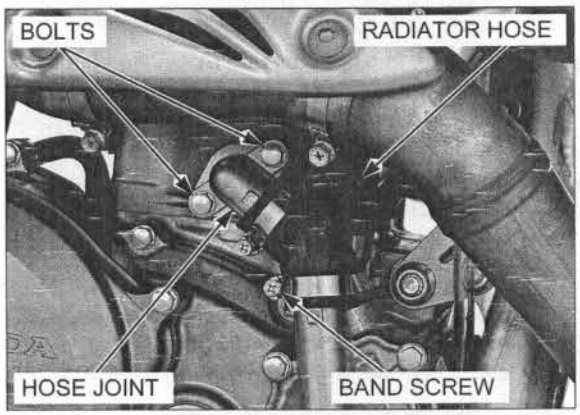

Loosen the right crankcase cover bolts in a crisscross pattern in two or three steps.

Clean off any dirt from the kickstarter spindle before removing the right crankcase cover.

Remove the bolts and right crankcase cover.

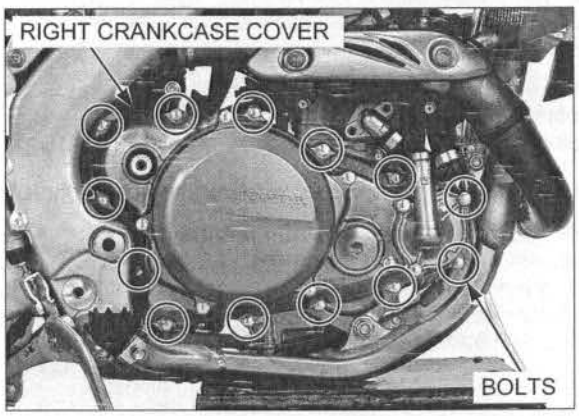

Remove the dowel pins and gasket.

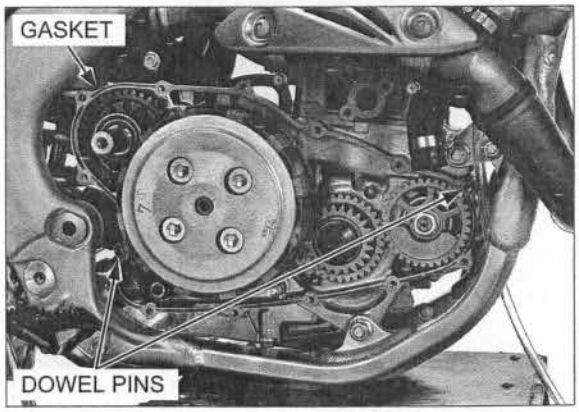

Remove the O-ring from the water hose joint.

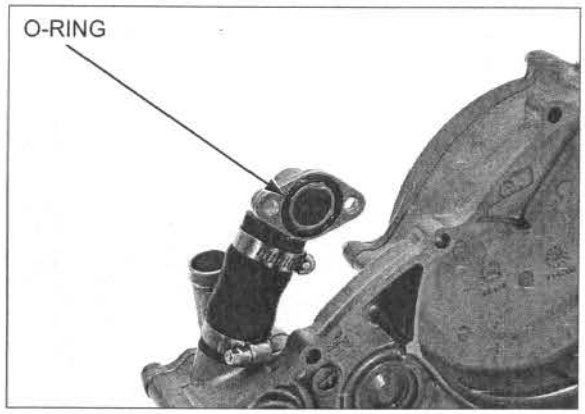

Remove the kickstarter spindle oil seal.

Apply grease to a new oil seal lips and install it to the right crankcase cover.

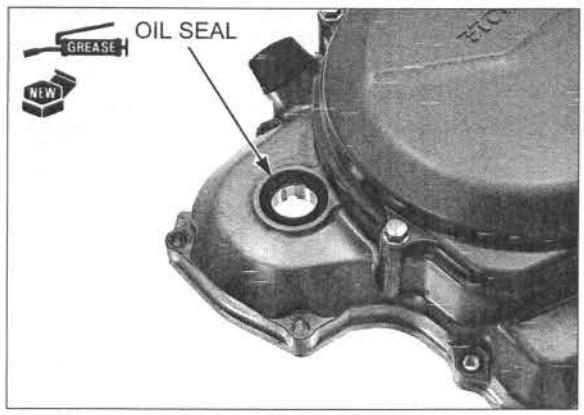

INSTALLATION

Apply engine oil to a new O-ring, and install it to the water hose joint.

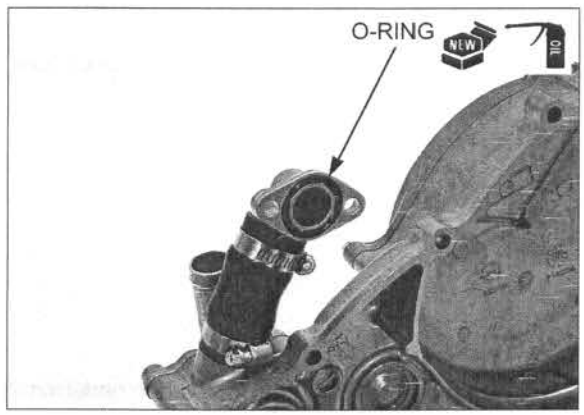

Install the dowel pins and new gasket.

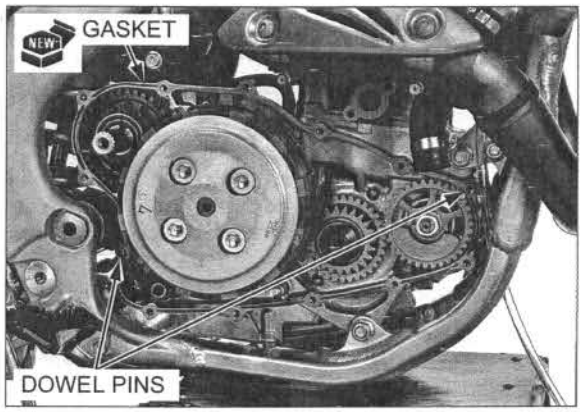

Be careful not to damage the kickstarter spindle oil seal.

Install the right crankcase cover while aligning the flat of the water pump shaft and balancer shaft groove.

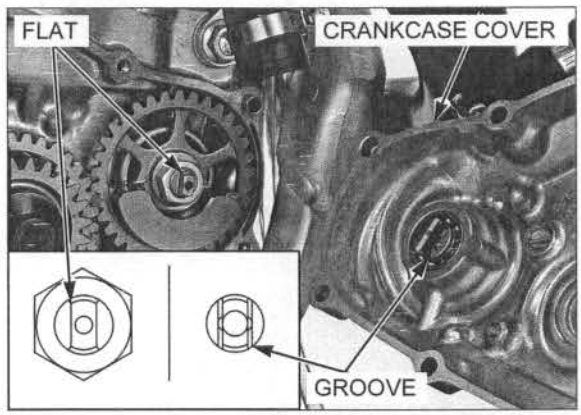

Install and tighten the bolts securely in a crisscross pattern in two or three steps.

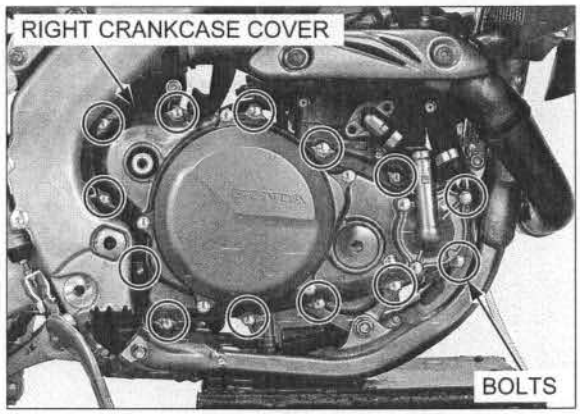

Connect the lower radiator hose to the water pump cover and tighten the hose band screw securely (page 7-11).

Install and tighten the water hose joint bolts securely.

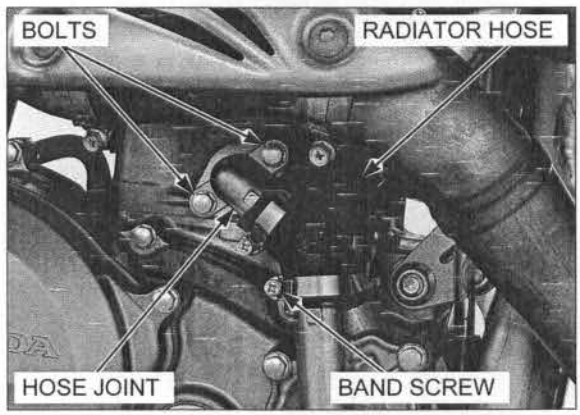

Install the kickstarter pedal on its original position as marked during removal.
Install and tighten the kickstarter pedal bolt to the specified torque.

TORQUE: 38 N·m (3.9 kgf·m, 28 lbf·ft)

Install the brake pedal pivot bolt (page 16-30).

Fill the radiator with the recommended coolant mixture to the filler neck and bleed the air (page 7-8).
Fill the transmission with the recommended oil (page 4-18).
Check and adjust the brake pedal height (page 4-26).

Start the engine and check for oil leaks.

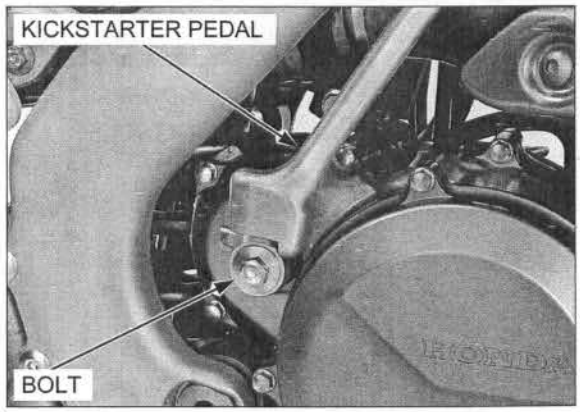

CLUTCH

DISCS/PLATES/CENTER REMOVAL

Drain the transmission oil (page 4-18).
Remove the brake pedal pivot bolt (page 16-29).

Remove the bolts, clutch cover and O-ring.

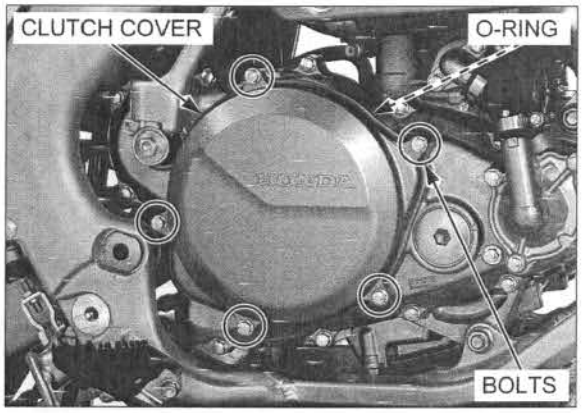

Remove the clutch spring bolts in a crisscross pattern in two or three steps.
Remove the clutch springs and clutch pressure plate.

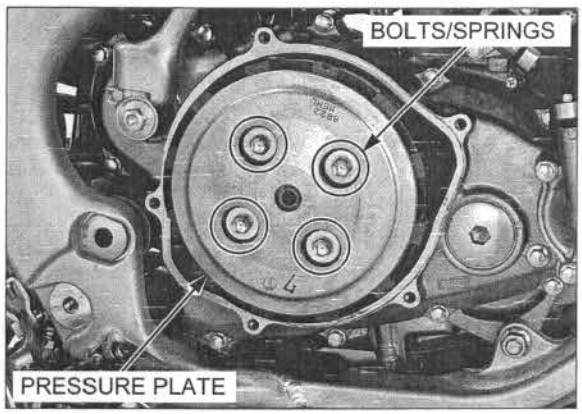

Remove the following:

- Thrust washer
- Needle bearing
- Clutch lifter piece
- Clutch lifter rod

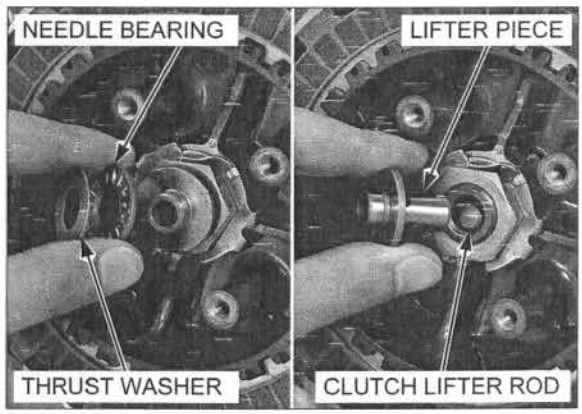

Remove the eight clutch discs and seven clutch plates.

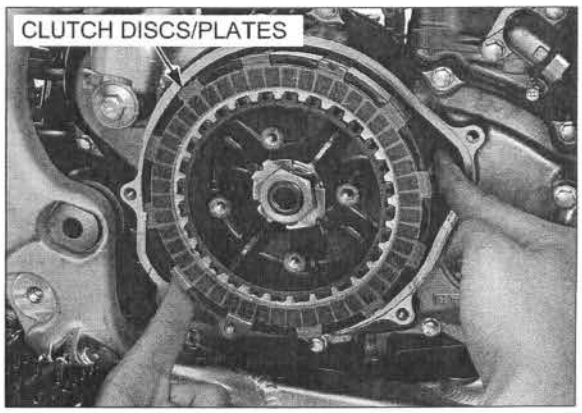

Bend the tab of the lock washer away from the lock nut.

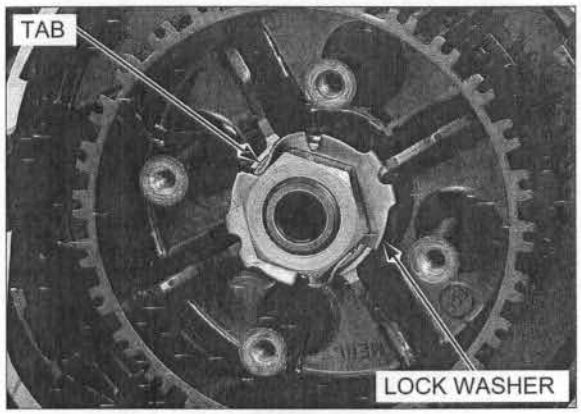

Remove the clutch center lock nut while holding the clutch center using the special tool.

TOOL:

Clutch center holder	**07724-0050002 or equivalent commercially available in U.S.A.**

Remove the lock washer and thrust washer.
Remove the special tool and clutch center.

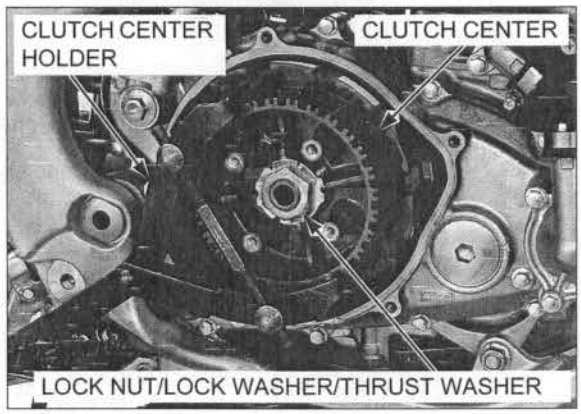

DISCS/PLATES/CENTER INSPECTION

CLUTCH SPRING

Check the clutch spring for wear or damage.

Clutch springs should be replaced as a set.

If you feel the clutch slippage when replacing the clutch discs and plates, replace the clutch springs.

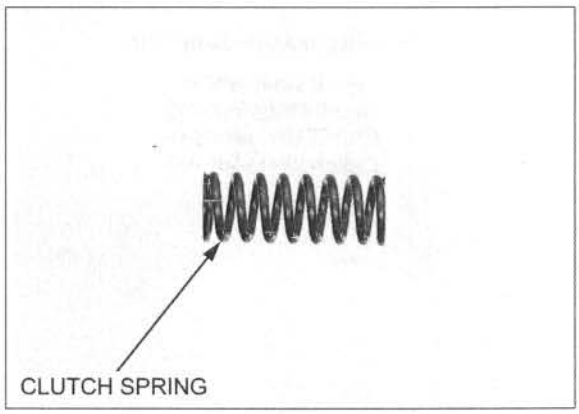

CLUTCH DISCS

Check the clutch discs for signs of scoring or discoloration.

Replace the clutch discs and plates as a set.

Measure the thickness of each clutch disc.

SERVICE LIMIT: 2.85 mm (0.112 in)

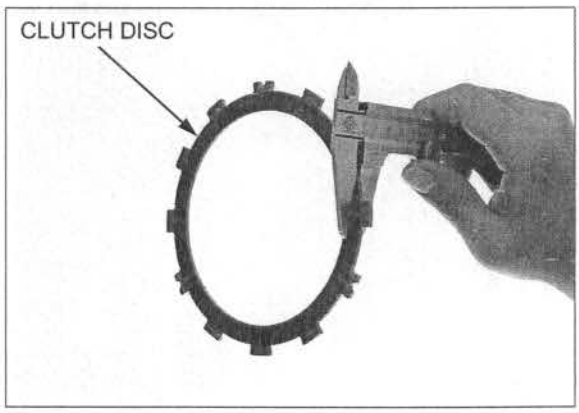

CLUTCH PLATES

Check the plates for excessive warpage or discoloration.

Replace the clutch discs and plates as a set.

Measure the warpage of each plate.

SERVICE LIMIT: 0.15 mm (0.006 in)

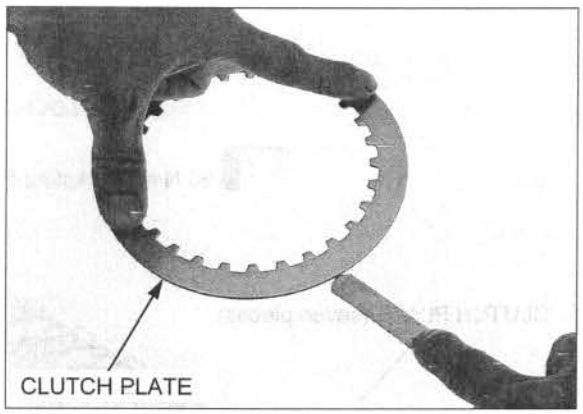

CLUTCH CENTER

Check the clutch center grooves for nicks, indentations or abnormal wear made by the clutch plates.

Replace it if necessary.

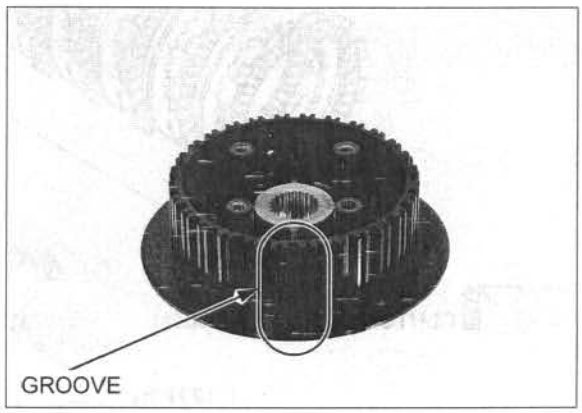

CLUTCH LIFTER PIECE/NEEDLE BEARING

Assemble the lifter piece, needle bearing and thrust washer.

Turn the clutch lifter piece with your finger and make sure the needle bearing turns smoothly.
Replace the needle bearing and thrust washer as a set if necessary.

CLUTCH LIFTER ROD

Check the clutch lifter rod for damage and straightness.

Replace it if necessary.

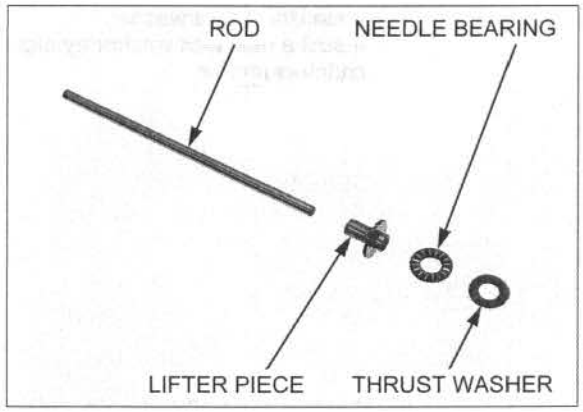

DISCS/PLATES/CENTER INSTALLATION

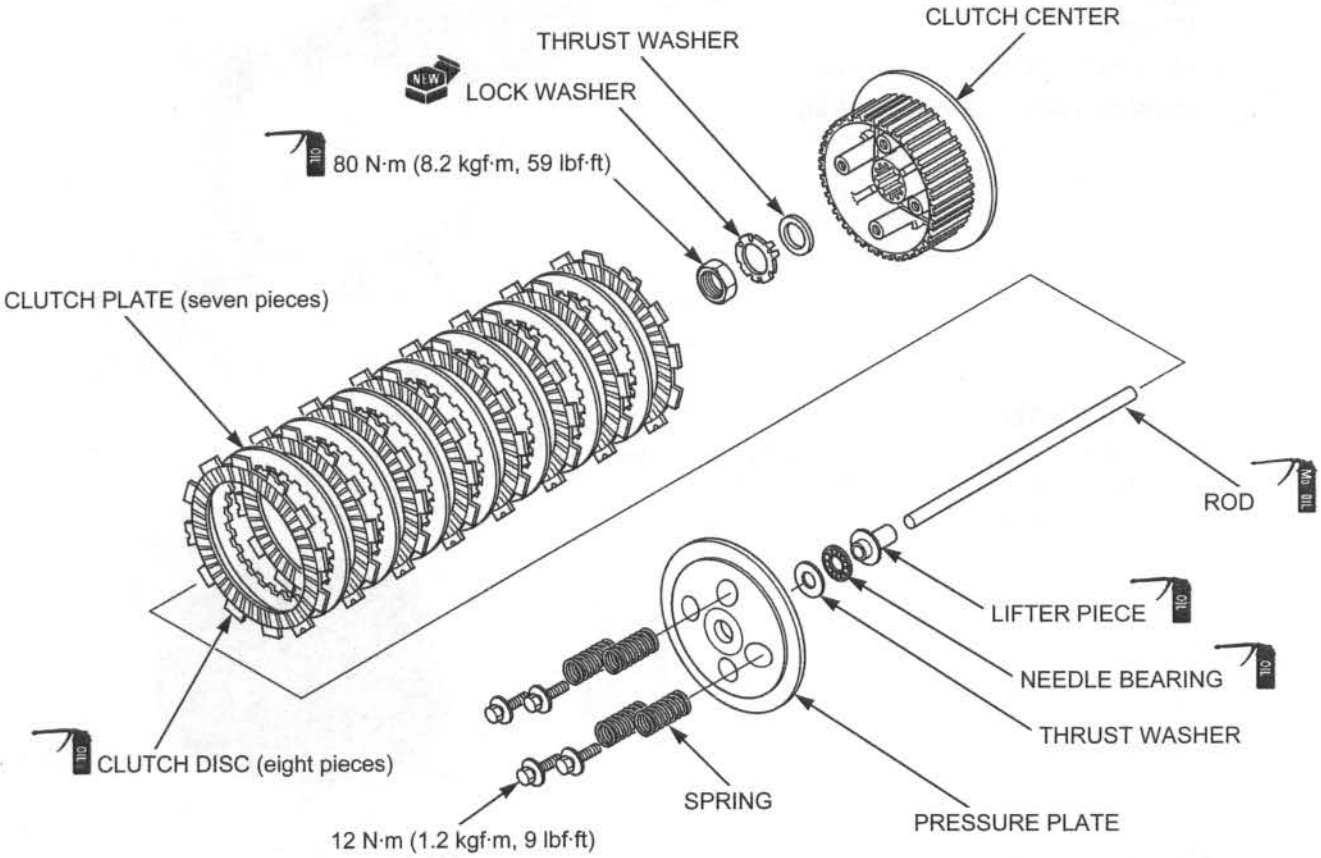

Install the clutch center to the mainshaft.
Install the thrust washer.
Install a new lock washer by aligning its groove with the clutch center rib.

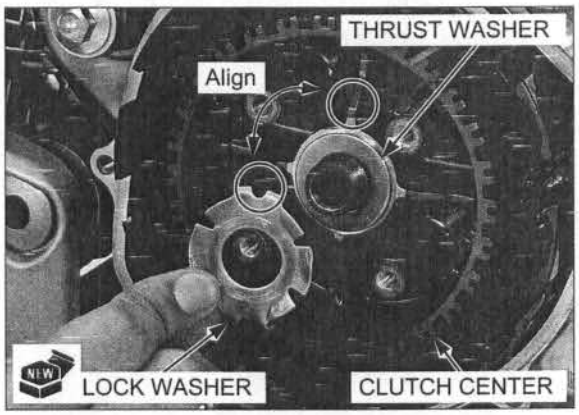

Apply engine oil to the threads and seating surface of the clutch center lock nut, then install it to the mainshaft.

Tighten the clutch center lock nut to the specified torque while holding the clutch center using the special tool.

TOOL:

Clutch center holder	**07724-0050002 or equivalent commercially available in U.S.A.**

TORQUE: 80 N·m (8.2 kgf·m, 59 lbf·ft)

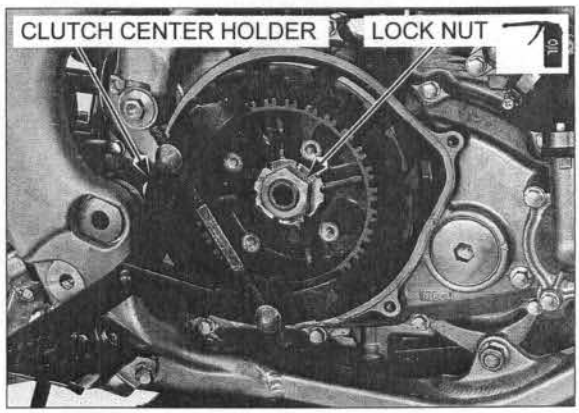

Bend the tabs of the lock washer up against the clutch center lock nut.

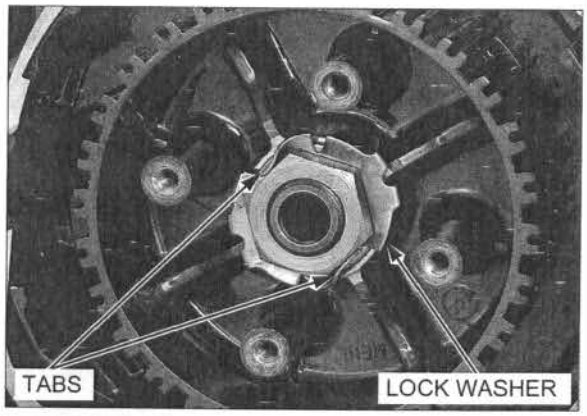

Coat the clutch discs lining surfaces with clean engine oil.

Install the eight clutch discs and seven clutch plates alternately, starting with a disc.

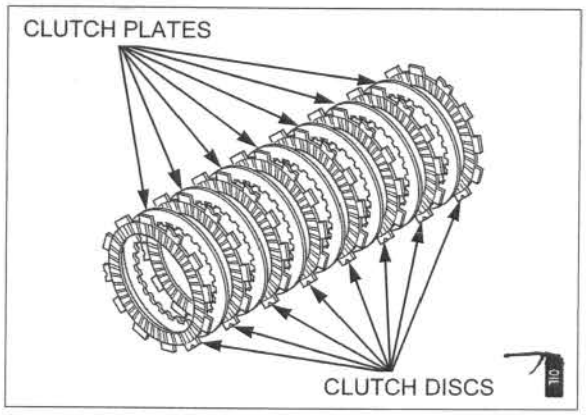

Apply molybdenum oil solution to the clutch lifter lever cam contact area of clutch lifter rod.

Insert the clutch lifter rod into the mainshaft.

Apply engine oil to the clutch lifter piece needle bearing contact area.
Install the clutch lifter piece.

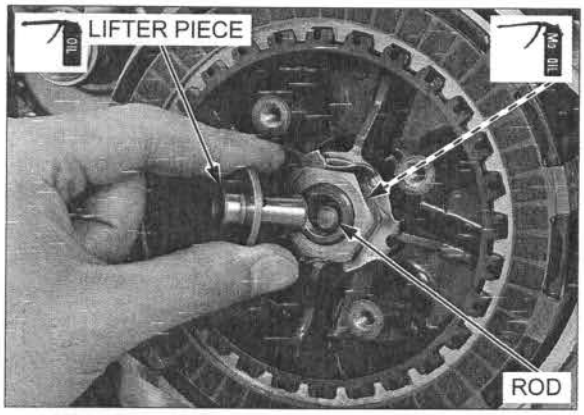

Apply engine oil to the needle bearing.

Install the needle bearing and thrust washer to the clutch lifter piece.

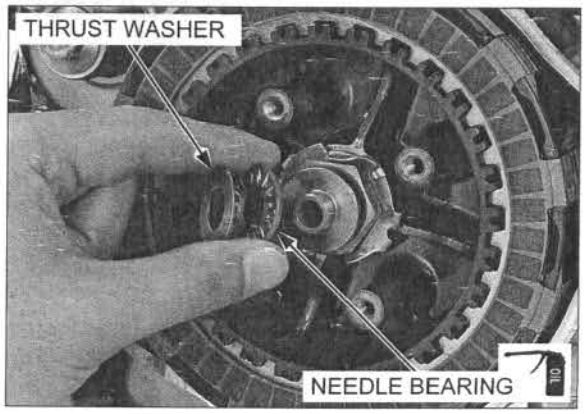

Install the clutch pressure plate.
Install the springs and clutch spring bolts.

Tighten the clutch spring bolts to the specified torque in a crisscross pattern in two or three steps.

TORQUE: 12 N·m (1.2 kgf·m, 9 lbf·ft)

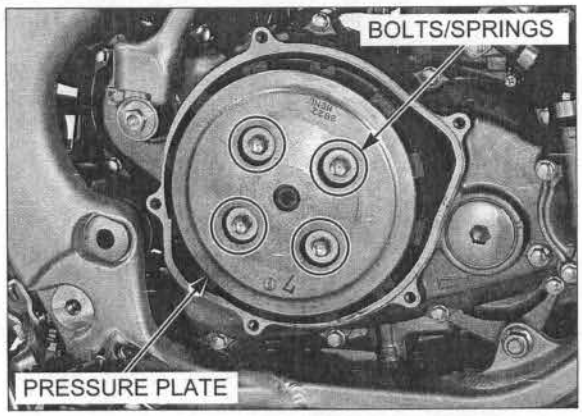

Check that the clutch cover O-ring is in good condition, replace it if necessary.

Apply engine oil to the O-ring, and install it to the clutch cover.

Install the clutch cover.

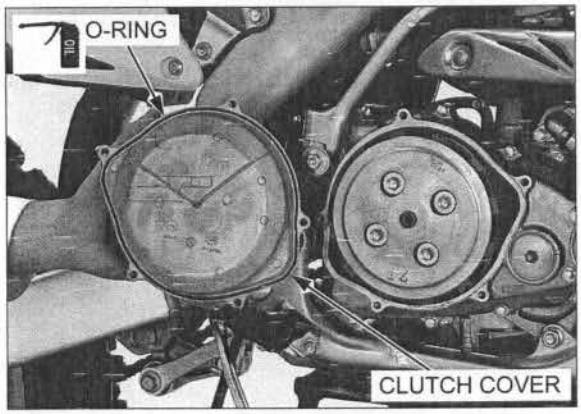

Install and tighten the clutch cover bolts to the specified torque in a crisscross pattern in two or three steps.

TORQUE: 10 N·m (1.0 kgf·m, 7 lbf·ft)

Install the brake pedal pivot bolt (page 16-30).
Adjust the clutch lever freeplay (page 4-27).
Fill the transmission with the recommended oil (page 4-18).

Start the engine and check for oil leaks.

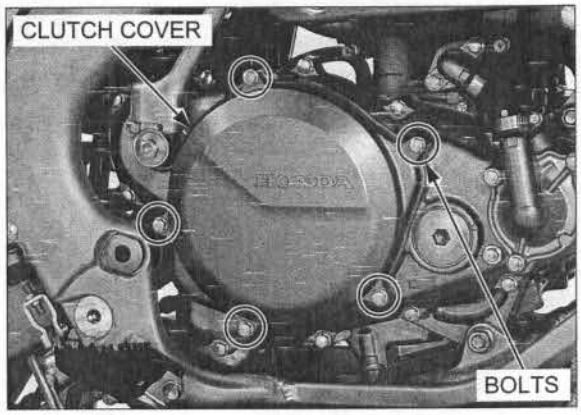

CLUTCH OUTER REMOVAL

Remove the right crankcase cover (page 11-6).
Remove the clutch discs, clutch plates and clutch center (page 11-9).

Remove the thrust washer and clutch outer.

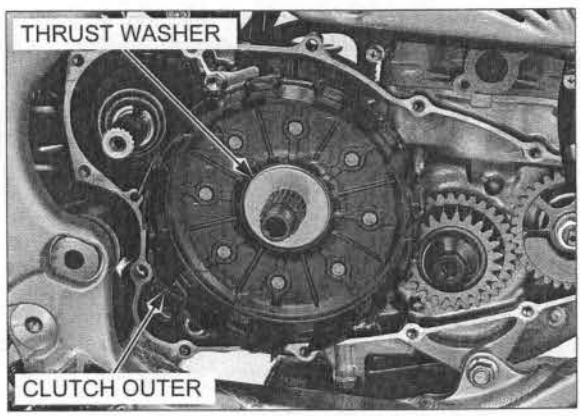

Remove the needle bearing and clutch outer guide.

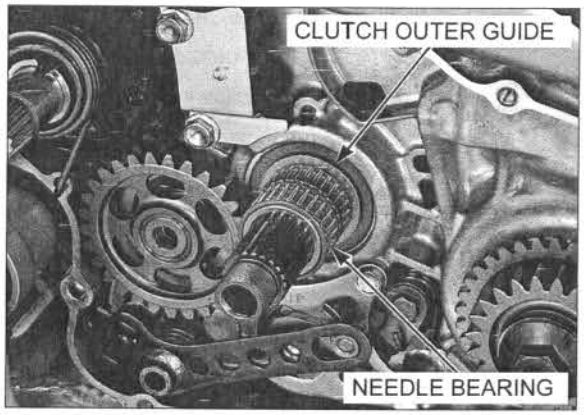

CLUTCH OUTER INSPECTION

CLUTCH OUTER

Check the clutch outer slots for nicks, indentations or abnormal wear made by the clutch discs.
Check the serrated teeth of the primary driven gear for wear or damage.

Replace the clutch outer if necessary.

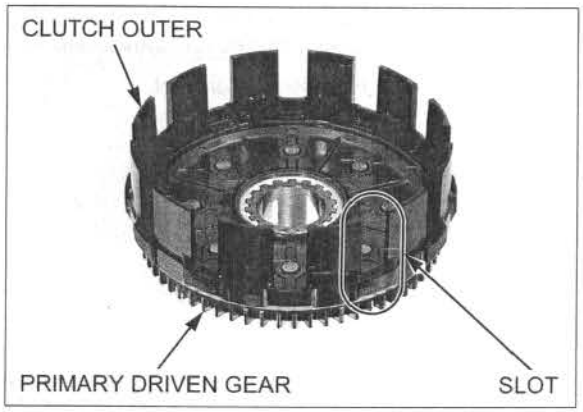

CLUTCH OUTER GUIDE

Check the clutch outer guide for abnormal wear or damage.

Replace it if necessary.

NEEDLE BEARING

Check the needle bearing for wear or damage.

Replace it if necessary.

Check the mainshaft for wear or damage at the sliding surface of the clutch outer guide.

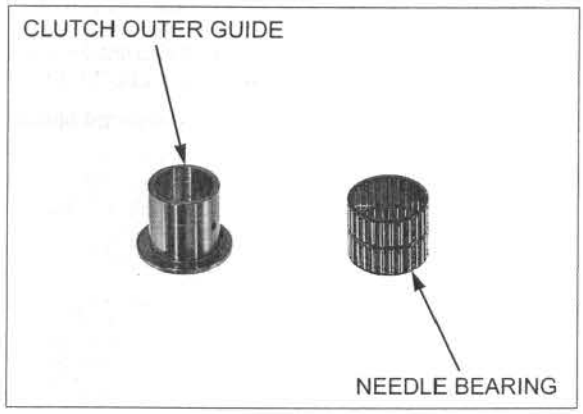

CLUTCH OUTER INSTALLATION

Apply molybdenum oil solution to the clutch outer guide sliding surface, and install it to the mainshaft.
Apply engine oil to the needle bearing, and install it to the clutch outer guide.

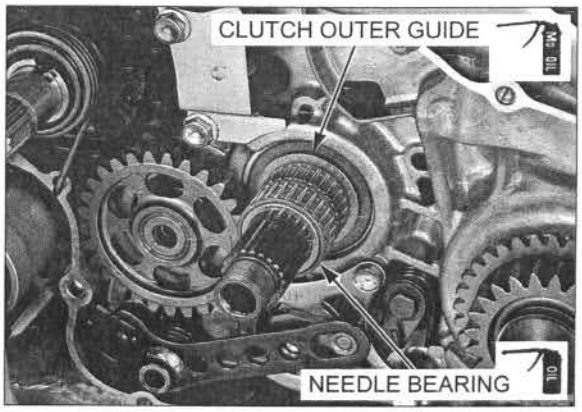

Apply engine oil to the clutch outer sliding area.

Install the clutch outer and thrust washer.

Install the following:

- Clutch center, clutch discs, clutch plates (page 11-12)
- Right crankcase cover (page 11-7)

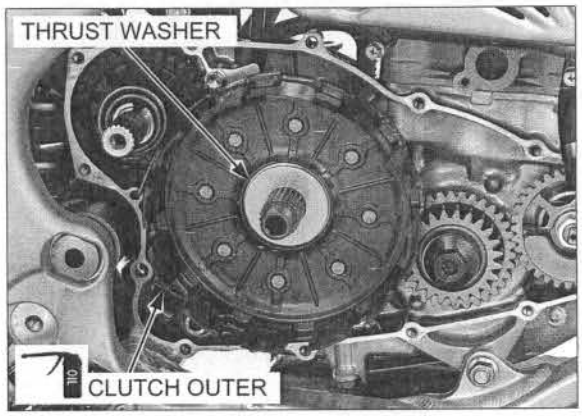

LIFTER LEVER REMOVAL

Remove the clutch lifter rod (page 11-9).

Disconnect the clutch cable and remove the clutch lifter lever from the left crankcase.

Remove the oil seal.

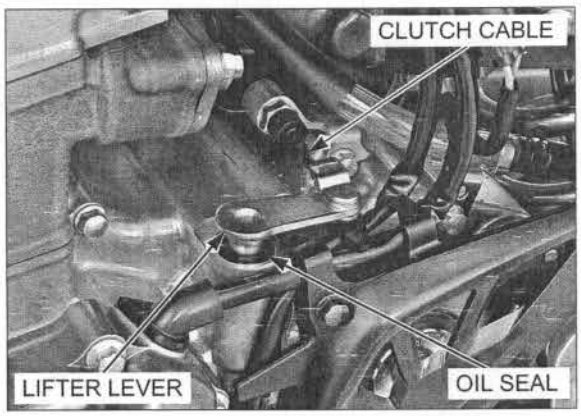

LIFTER LEVER INSPECTION/ INSTALLATION

Check the clutch lifter lever for bend or damage.

Check the needle bearings for wear or damage, replace them if necessary (page 11-17).

Apply grease to a new oil seal lips and install it to the left crankcase.

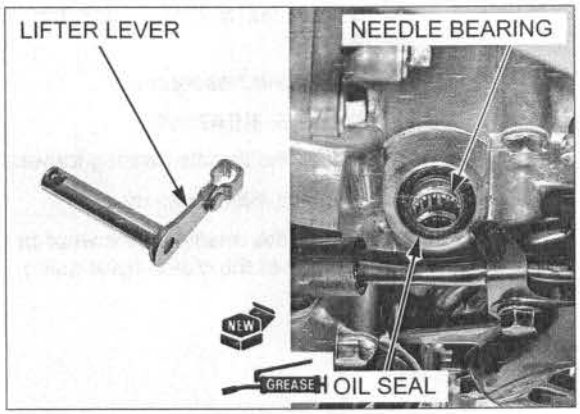

Apply molybdenum oil solution to the clutch lifter lever cam area (Contact area of clutch lifter rod).

Install the clutch lifter lever into the left crankcase. Connect the clutch cable to the clutch lifter lever.

Install the clutch lifter rod (page 11-12).

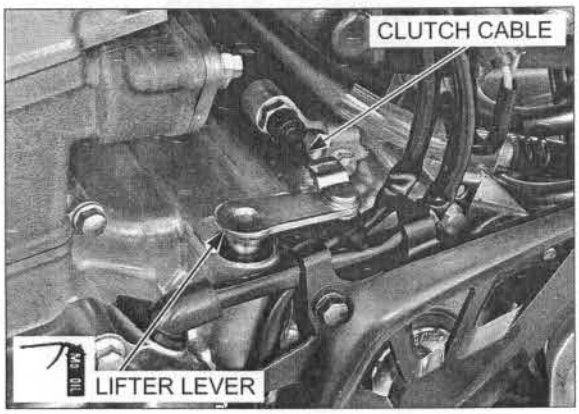

LIFTER LEVER BEARING REPLACEMENT

Remove the following:

- Clutch lifter lever (page 11-16)
- Cam chain tensioner lifter (do not remove the cylinder head) (page 10-5)

Remove the engine from the frame (page 8-4).

Remove the lifter lever needle bearings using the special tools.

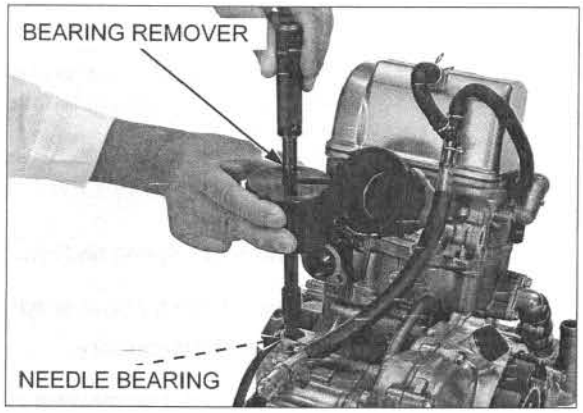

TOOLS:

Bearing remover set, 12 mm	**07936-1660101 not available in U.S.A.**
– Remover weight	**07741-0010201**
– Remover head, 12 mm	**07936-1660110 not available in U.S.A.**
– Remover shaft	**07936-1660120 not available in U.S.A.**
TOOLS, U.S.A. only:	
Bearing remover, 12 mm	**07936-166010A**
Remover handle	**07936-3710100**
Remover weight	**07936-371020A**

Apply engine oil to new needle bearings.

Drive in new needle bearings squarely with the marked side facing up.

Drive in new needle bearings using the special tools to the specified depth below the crankcase surface as shown.

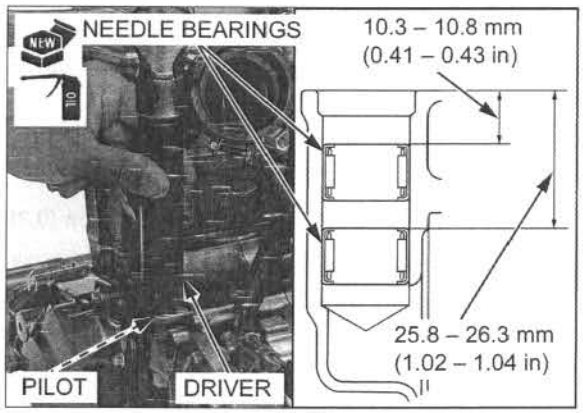

TOOLS:

Driver	**07749-0010000**
Pilot, 16 mm	**07746-0041300**
TOOL, U.S.A. only:	
Needle bearing driver	**07AMD-MENA200**

Install the engine into the frame (page 8-7).

Install the following:

- Cam chain tensioner lifter (page 10-10)
- Clutch lifter lever (page 11-16)

KICKSTARTER

REMOVAL

Remove the following:

- Right crankcase cover (page 11-6)
- Clutch outer (page 11-14)

Remove the idle gear and bushing.

Unhook the kickstarter return spring end from the crankcase, and remove the kickstarter assembly out.

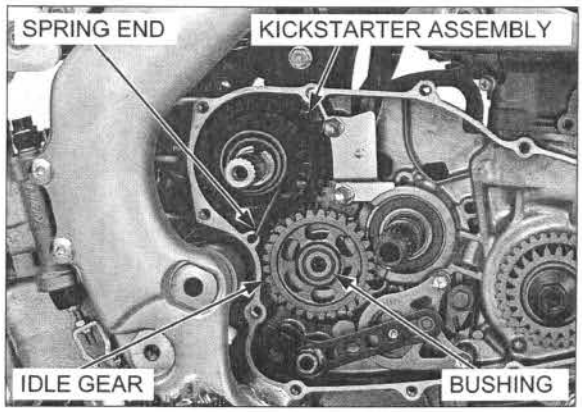

DISASSEMBLY

Disassemble the kickstarter assembly by removing the following:

- Return spring and collar
- Thrust washers, pinion gear and bushing
- Ratchet spring and starter ratchet
- Snap ring

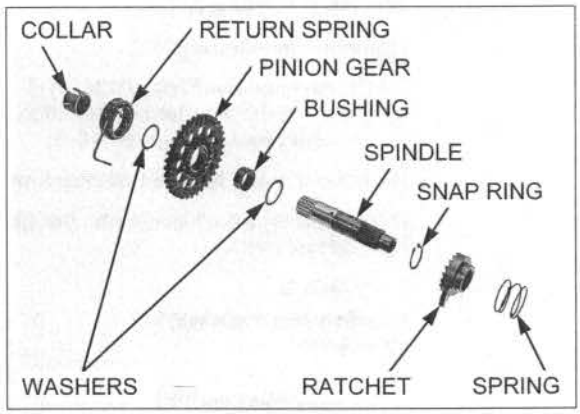

INSPECTION

Check the return spring and ratchet spring for fatigue or damage.
Check the ratchet for wear or damage.

Replace them if necessary.

Check the pinion gear for wear or damage.
Check the spindle for bend, wear or damage.
Check the pinion gear bushing for damage or excessive wear.
Measure the pinion gear I.D.

SERVICE LIMIT: 22.05 mm (0.868 in)

Measure the pinion gear bushing I.D. and O.D.

SERVICE LIMITS: I.D. : 20.04 mm (0.789 in)
O.D. : 21.96 mm (0.865 in)

Measure the spindle O.D.

SERVICE LIMIT: 19.97 mm (0.786 in)

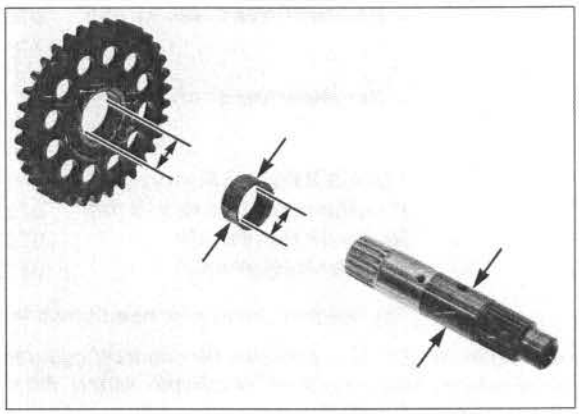

Check the idle gear and bushing for wear or damage.

Measure the idle gear I.D.

SERVICE LIMIT: 20.07 mm (0.790 in)

Measure the idle gear bushing I.D. and O.D.

SERVICE LIMITS: I.D. : 17.04 mm (0.671 in)
O.D. : 19.96 mm (0.786 in)

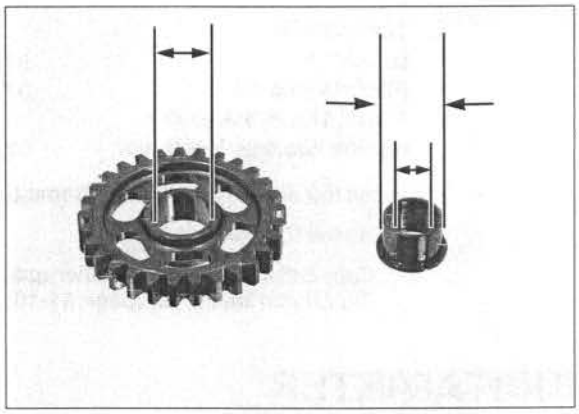

Measure the countershaft O.D. at the idle gear bushing sliding surface.

SERVICE LIMIT: 16.95 mm (0.667 in)

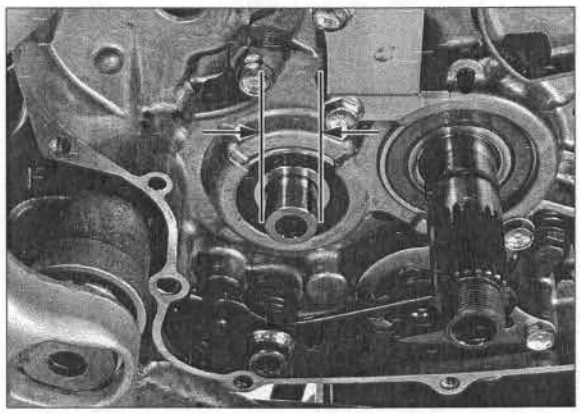

ASSEMBLY

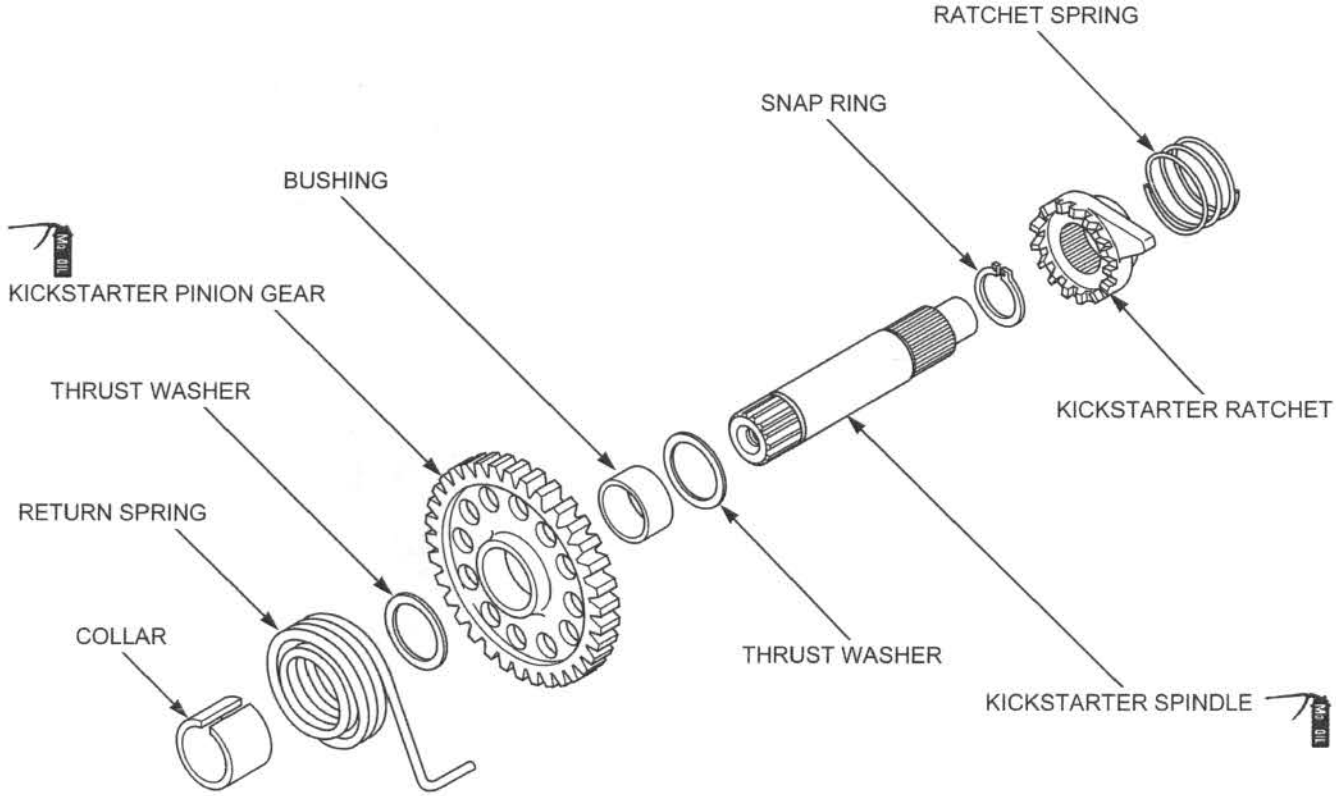

Install the snap ring with the chamfered edge facing the trust road side. Check that the snap ring is seated in the spindle groove.

Install the snap ring in the groove of the spindle.

Install the thrust washer.

Apply molybdenum oil solution to the spindle gear rolling area.

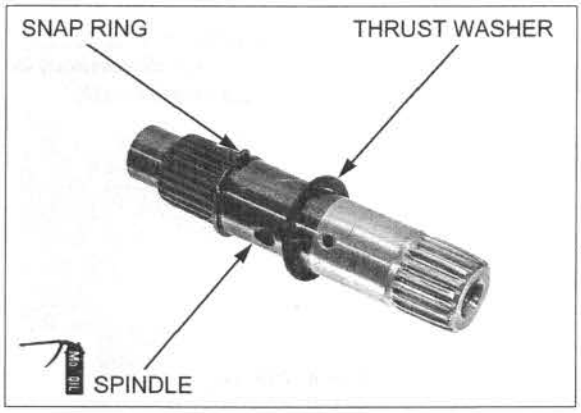

Install the pinion gear bushing.

Apply molybdenum oil solution to the pinion gear inner surface.

Install the pinion gear and thrust washer.

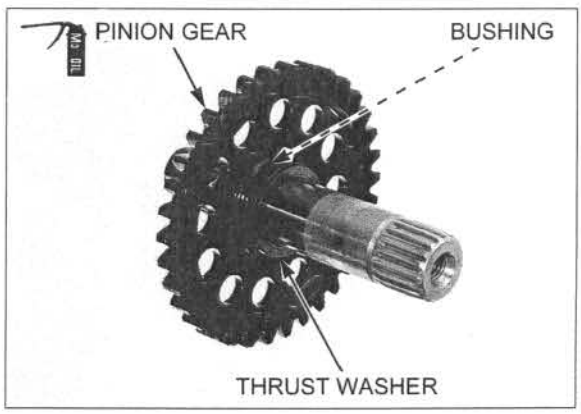

Insert the return spring into the hole on the spindle.

Install the collar aligning the gap of the collar with the spring.

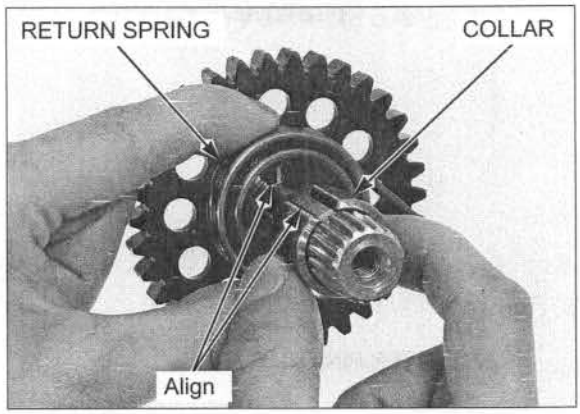

Apply molybdenum oil solution to the spindle spline area.

Align the punch marks and install the ratchet.

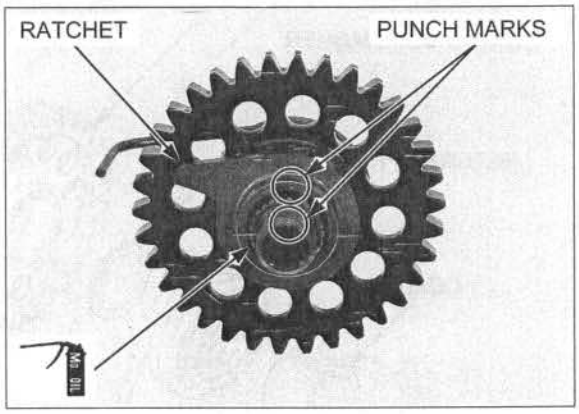

INSTALLATION

Install the ratchet spring.

Apply engine oil to the spindle journal.

Install the kickstarter assembly to the crankcase and rotate the spindle counterclockwise until the ratchet tab is clear of the stopper plate.

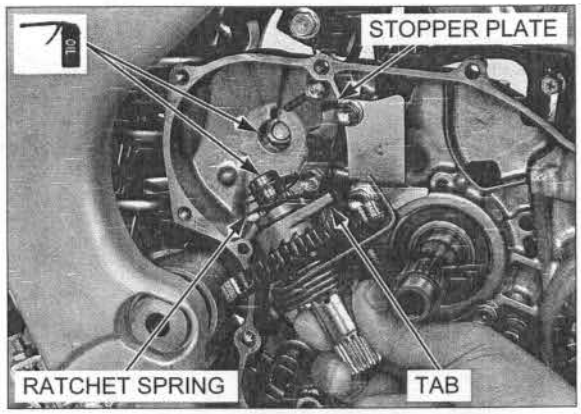

Hook the return spring end into the hole in the crankcase.

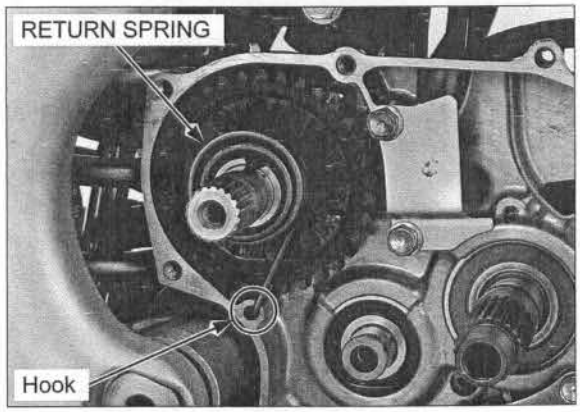

Apply molybdenum oil solution to the following area:

- Countershaft-to-idle gear bushing contact area
- Idle gear inner surface

Install the idle gear with the flat side facing toward the outside of the crankcase.

Install the idle gear bushing and idle gear to the countershaft.

Install the clutch outer (page 11-15).
Install the right crankcase cover (page 11-7).

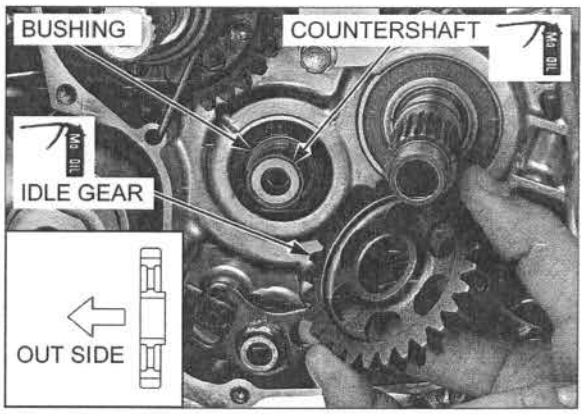

GEARSHIFT LINKAGE

REMOVAL

Remove the following:

- Right crankcase cover (page 11-6)
- Clutch outer (page 11-14)

Clean off any dirt from the gearshift spindle serration.

When removing the gearshift pedal, mark the pedal position to ensure correct reassembly in its original location.

Remove the bolt and gearshift pedal.

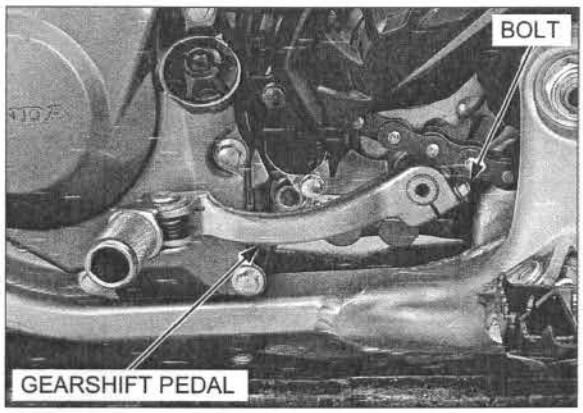

Remove the gearshift spindle assembly and washer from the crankcase.

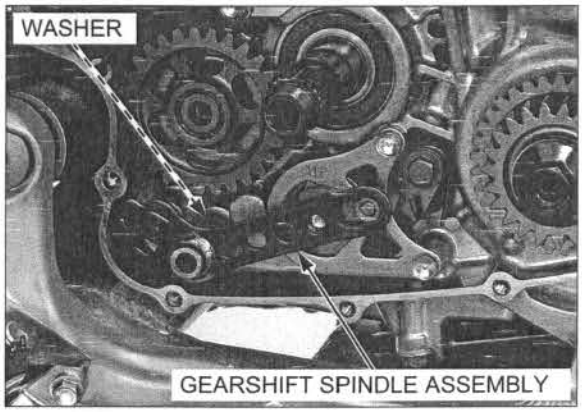

Remove the shifter collar.

Do not let the ratchet pawls fall when removing the guide plate and drum shifter.

Remove the bolts, guide plate and drum shifter as an assembly.

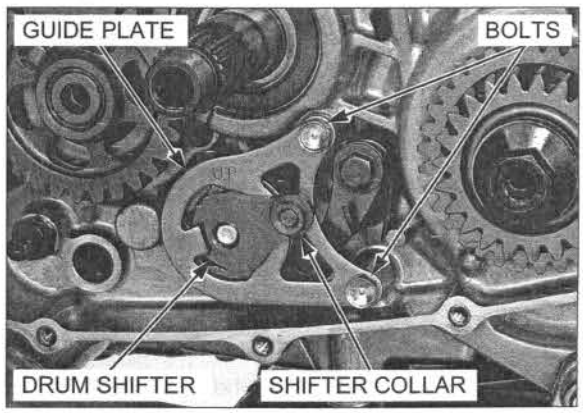

Remove the gearshift drum center pin and gearshift drum center.

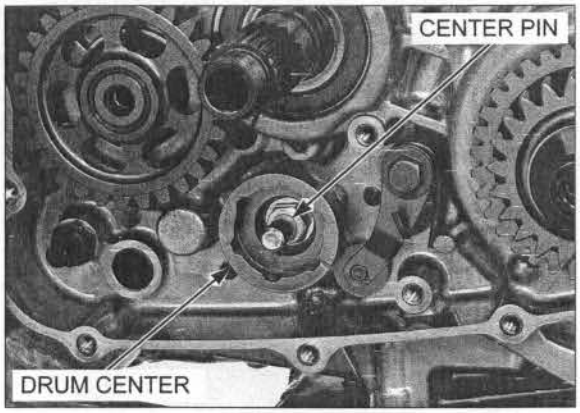

Remove the bolt, stopper arm, return spring and washer.

Remove the drum pin from the gearshift drum.

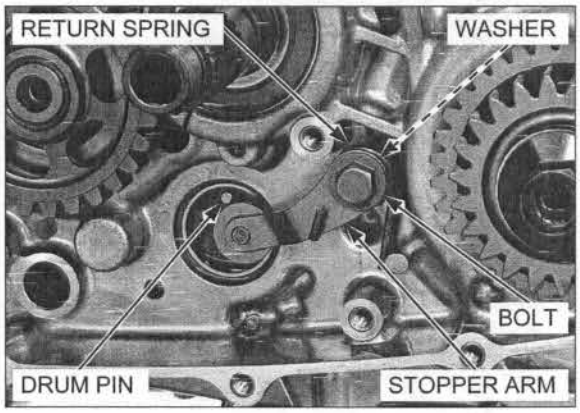

INSPECTION

GEARSHIFT SPINDLE

Check the gearshift spindle for bend, wear or damage. Check the return spring for fatigue or damage.

Replace them if necessary.

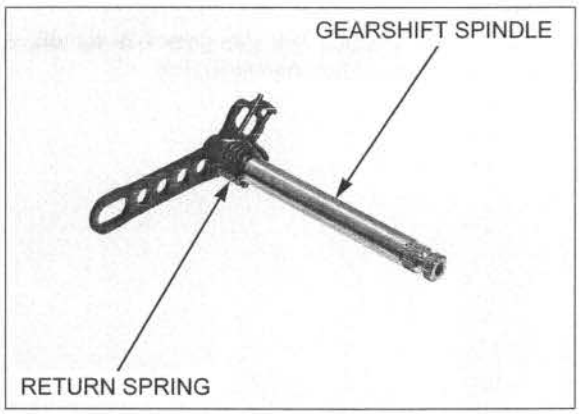

RATCHET PAWL

Remove the following:

- Guide plate
- Drum shifter
- Ratchet pawl A
- Ratchet pawl B
- Plungers
- Springs

Clean the ratchet pawl A, ratchet pawl B, plungers, springs and drum shifter with clean transmission oil.

Check each part for wear or damage.

Replace them if necessary.

Assemble the drum shifter, springs, plungers, ratchet pawl A and ratchet pawl B in the guide plate as shown.

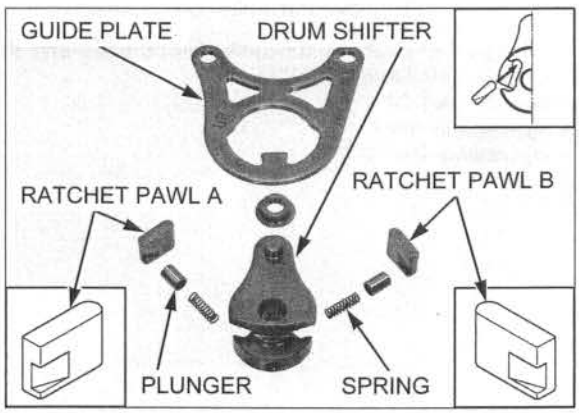

GEARSHIFT SPINDLE OIL SEAL

Remove the gearshift spindle oil seal.

Install a new oil seal with its marked side facing out.

Apply grease to a new gearshift spindle oil seal lips and install it to the right crankcase.

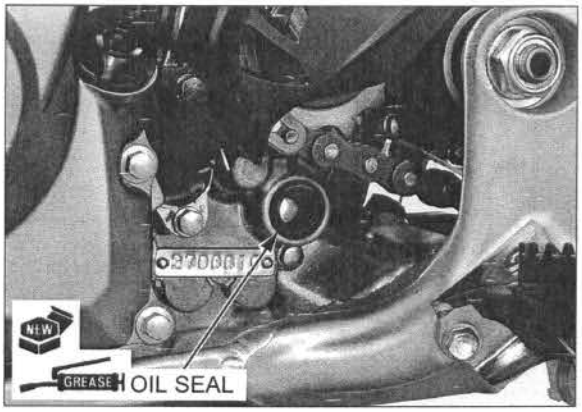

INSTALLATION

Install the drum pin into the hole on the gearshift drum.

Install the return spring, washer and stopper arm, and tighten the stopper arm bolt to the specified torque.

TORQUE: 12 N·m (1.2 kgf·m, 9 lbf·ft)

Check the stopper arm for proper operation.

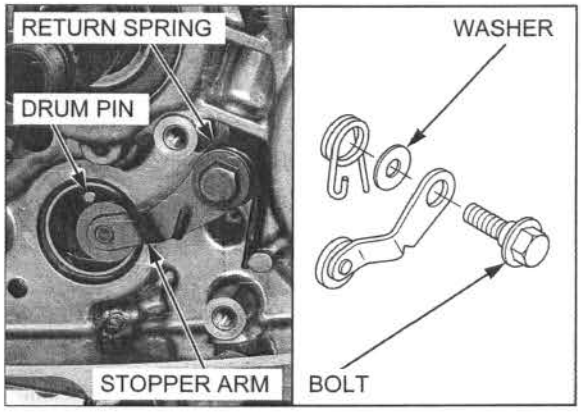

Move the stopper arm out of the way using a screwdriver.

Align the gearshift drum center groove with the drum pin.

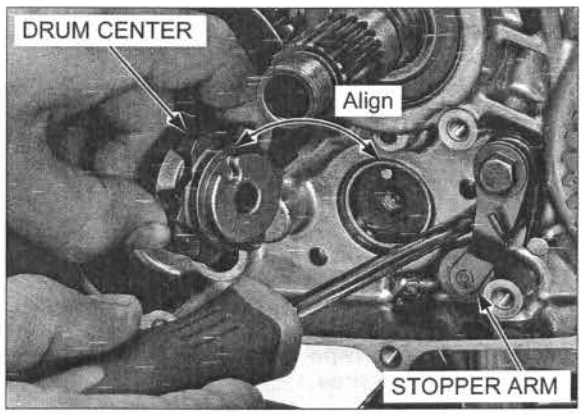

Apply locking agent to the gearshift drum center pin threads as shown.

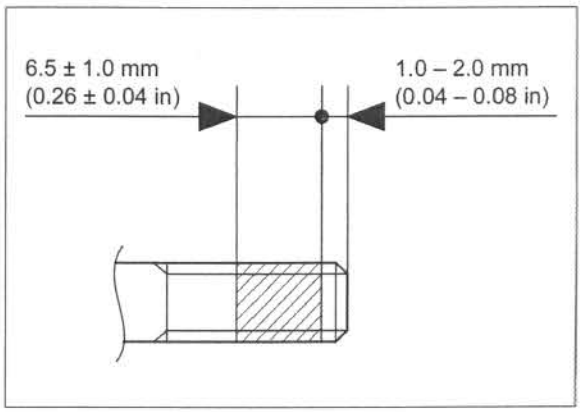

Install and tighten the gearshift drum center pin to the specified torque.

TORQUE: 22 N·m (2.2 kgf·m, 16 lbf·ft)

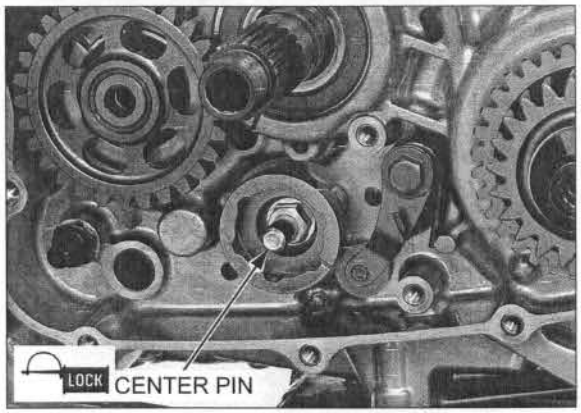

Set the gearshift drum center in a position other than neutral.

Install the drum shifter assembly with the "UP" mark facing up.

Holding the ratchet pawls in place in the guide plate and drum shifter, install the drum shifter assembly by aligning the hole of the drum shifter with the shift drum center pin.

Install and tighten the guide plate bolts securely.

Install the shifter collar onto the drum shifter.

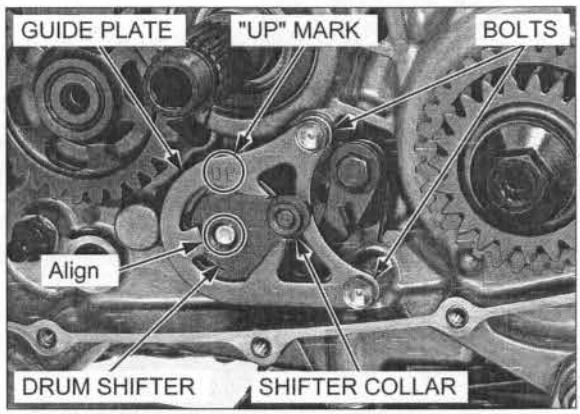

Apply engine oil to the gearshift spindle serration area.

Do not forget to install the washer onto the gearshift spindle.

Install the washer and gearshift spindle assembly into the crankcase while aligning the spring ends with the crankcase stopper pin and gearshift spindle end with the shifter collar.

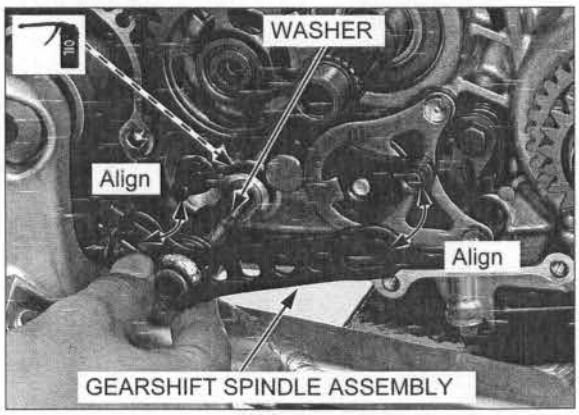

Wipe off any oil from the gearshift spindle serration area.

Install the gearshift pedal on its original position as marked during removal.
Install and tighten the bolt to the specified torque.

TORQUE: 12 N·m (1.2 kgf·m, 9 lbf·ft)

Move the gearshift pedal and check the shift mechanism for smooth operation.

Install the clutch outer (page 11-15).
Install the right crankcase cover (page 11-7).

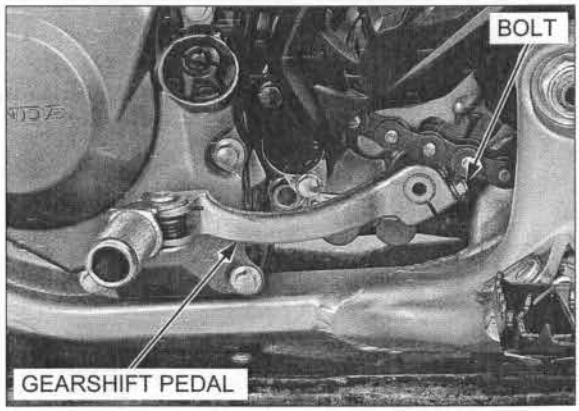

12. ALTERNATOR

COMPONENT LOCATION

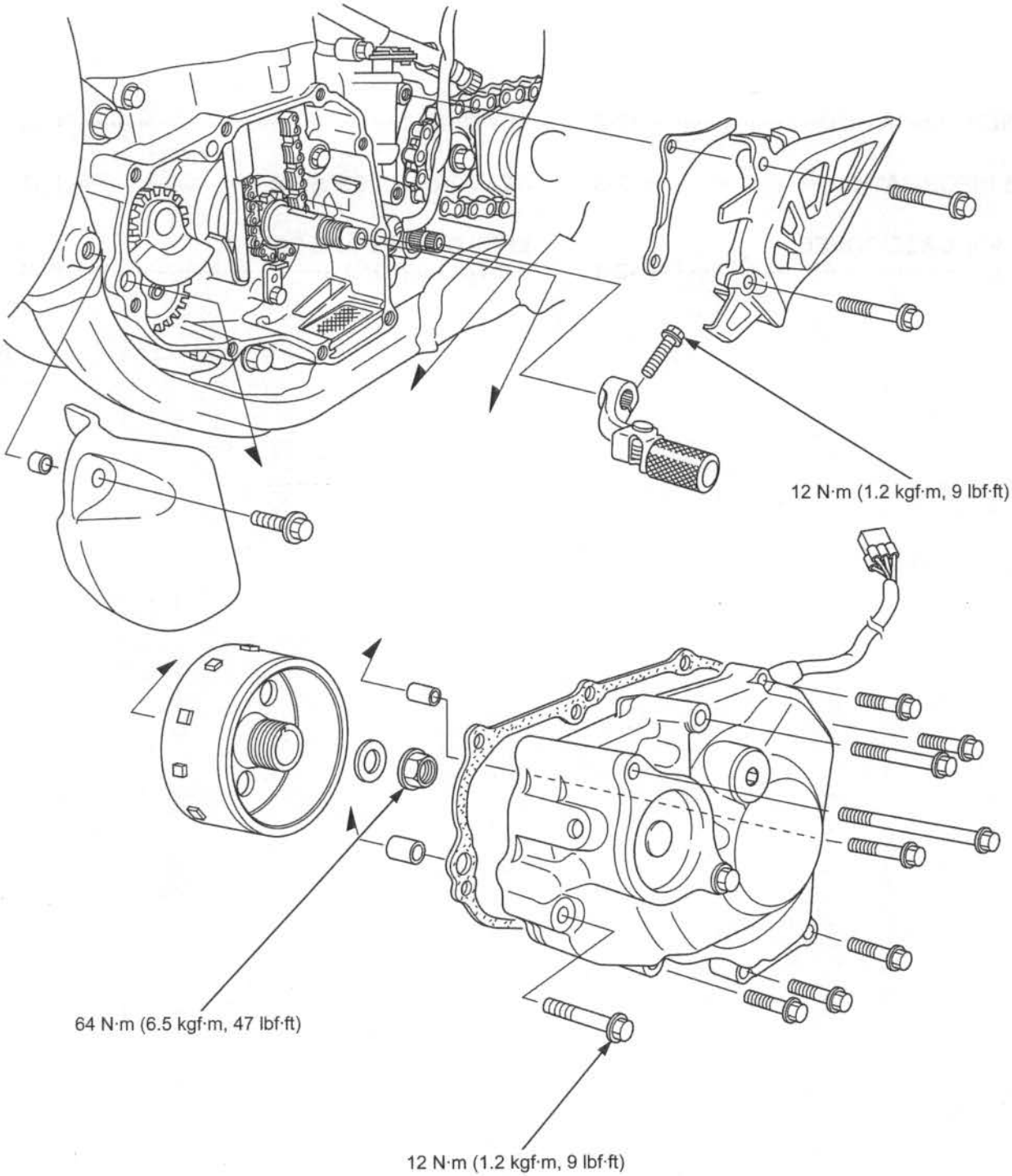

SERVICE INFORMATION

GENERAL

- This section covers service of the alternator stator and flywheel. All service can be done with the engine installed in the frame.
- Engine lubricating oil is fed through the alternator cover. Clean the oil passage before installing the alternator cover.
- For alternator inspection (page 17-9).
- For CKP sensor inspection (page 17-6).

TORQUE VALUES

Flywheel nut	64 N·m (6.5 kgf·m, 47 lbf·ft)	Apply engine oil to the threads and seating surface.
Timing hole cap	6.0 N·m (0.6 kgf·m, 4.4 lbf·ft)	Apply grease to the threads.
CKP sensor mounting bolt	5.2 N·m (0.5 kgf·m, 3.8 lbf·ft)	Apply locking agent to the threads.
Stator mounting socket bolt	5.2 N·m (0.5 kgf·m, 3.8 lbf·ft)	Apply locking agent to the threads.
Gearshift pedal pinch bolt	12 N·m (1.2 kgf·m, 9 lbf·ft)	
Left crankcase cover bolt	12 N·m (1.2 kgf·m, 9 lbf·ft)	

TOOLS

Flywheel holder 07725-0040001 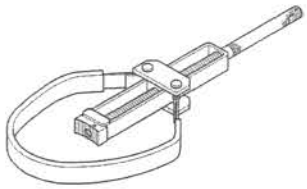 or 07AMB-MENA100 (U.S.A. only)	Flywheel puller 070MC-HP10100 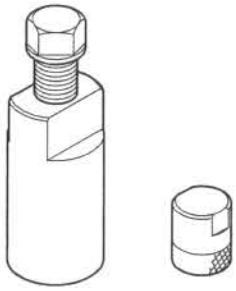 or 070MC-HP1A100 (U.S.A. only)	Flywheel puller adapter 070MG-KSE0100 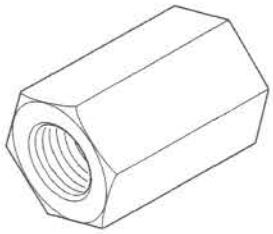 Not available in U.S.A.
Thread protector 07AMC-MEBA110 (U.S.A. only)  NOTE: This thread protector is included with 07AMC-MEBA100 or can be ordered separately		

LEFT CRANKCASE COVER REMOVAL

'09: Hang the fuel tank to the left side of the frame (page 4-6).

Remove the following:

- Engine guard (page 3-5)
- Gearshift pedal (page 11-21)
- Drive sprocket cover (page 4-20)

Drain the engine oil (page 4-15).

'09: Remove the wire band.

Disconnect the alternator/CKP sensor 6P (Natural) connector.

Remove the wire band and release the alternator/CKP sensor wire.

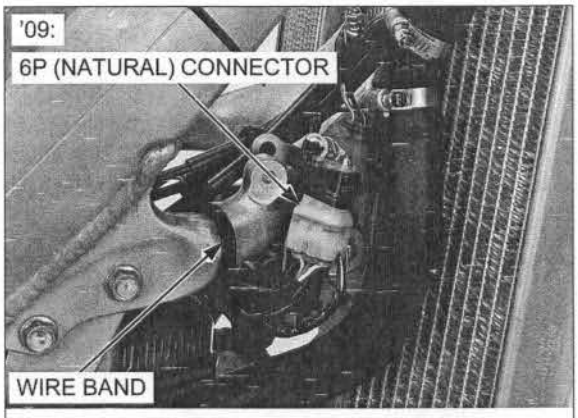

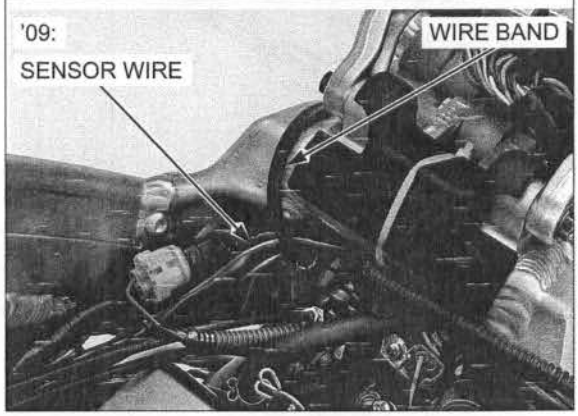

After '09: Disconnect the alternator/CKP sensor 6P (Black) connector.

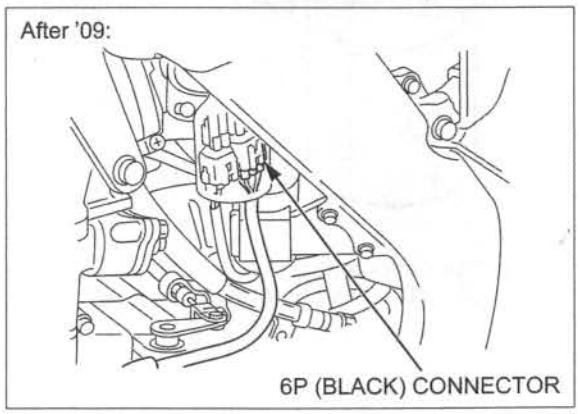

Loosen the left crankcase cover bolts in a crisscross pattern in two or three steps.

Remove the left crankcase cover bolts and left crankcase cover.

NOTE:
The left crankcase cover (stator) is magnetically attracted to the flywheel, be careful during removal.

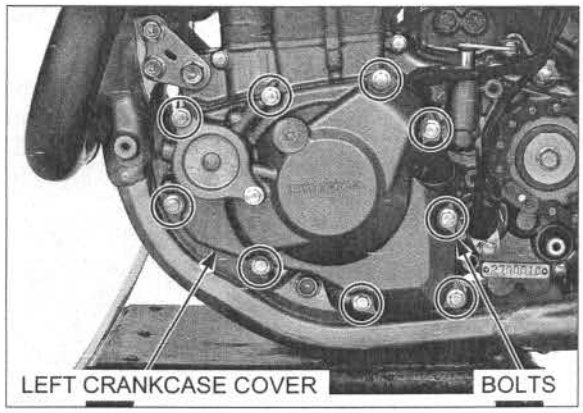

Remove the dowel pins and gasket.

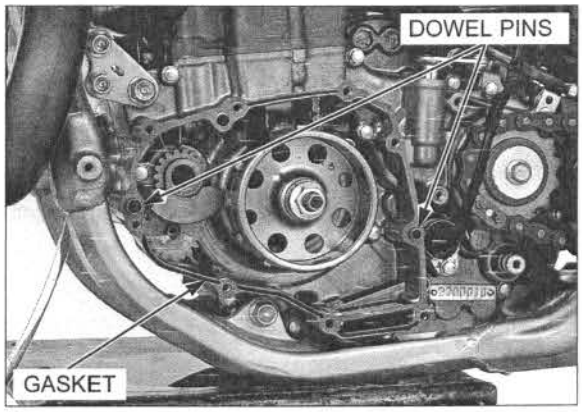

FLYWHEEL

REMOVAL

Remove the left crankcase cover (page 12-4).

Hold the flywheel with the special tool and remove the nut and washer.

TOOL:
Flywheel holder **07725-0040001 or 07AMB-MENA100 (U.S.A. only)**

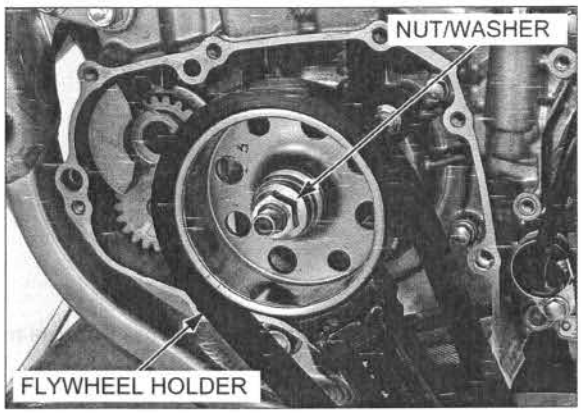

Be careful not to bottom the adapter against the crankshaft left end, or it may damage the oil control orifice.

Screw the special tool onto the crankshaft.

TOOL:
Flywheel puller adapter **070MG-KSE0100 (Not available in U.S.A.)**

TOOL, U.S.A. only:
Thread protector **07AMC-MEBA110**
(This thread protector is included with 07AMC-MEBA100 or can be ordered separately)

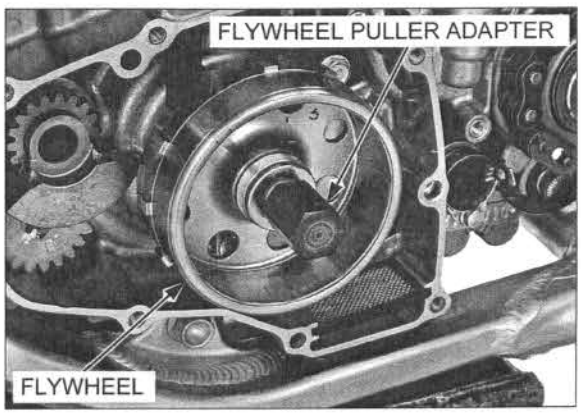

Attach the special tool on the flywheel, then remove it.

TOOL:
Flywheel puller — **070MC-HP10100 or 070MC-HP1A100 (U.S.A. only)**

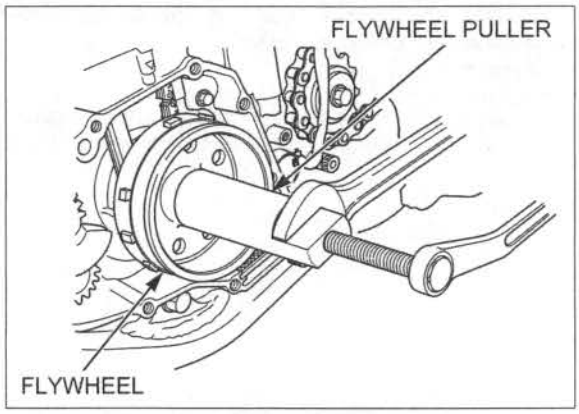

Be careful not to damage the crankshaft.

Remove the woodruff key.

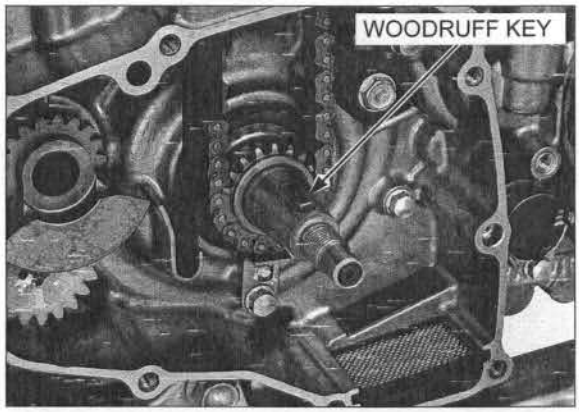

INSTALLATION

Clean any oil from the tapered portion of the crankshaft and flywheel.

Be careful not to damage the crankshaft.

Install the woodruff key in the groove in the crankshaft.

Install the flywheel to the crankshaft by aligning the groove in the flywheel with the woodruff key.

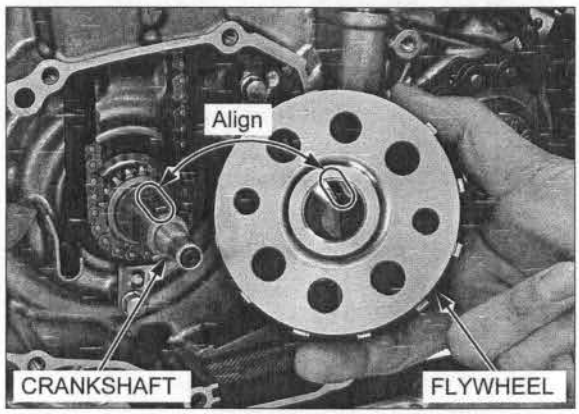

Apply engine oil to the flywheel nut threads and seating surface.

Install the washer and nut.
Hold the flywheel with the special tool and tighten the nut to the specified torque.

TOOL:
Flywheel holder — **07725-0040001 or 07AMB-MENA100 (U.S.A. only)**

TORQUE: 64 N·m (6.5 kgf·m, 47 lbf·ft)

Install the left crankcase cover (page 12-8).

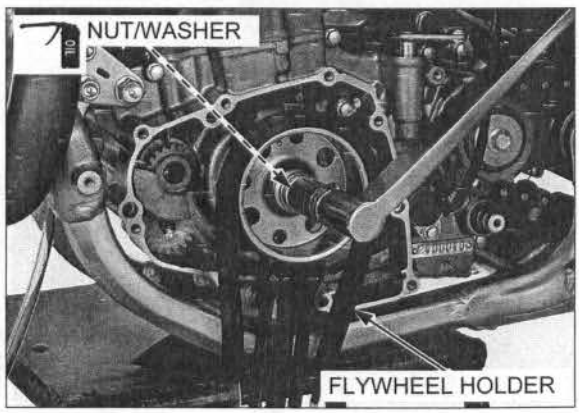

STATOR/CKP SENSOR

REMOVAL

Remove the left crankcase cover (page 12-4).

Remove the grommet from the left crankcase cover.

Remove the bolts, wire clamp and CKP sensors.

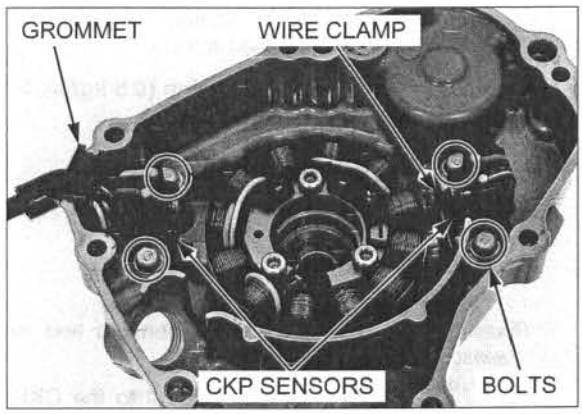

Remove the mounting socket bolts and stator.

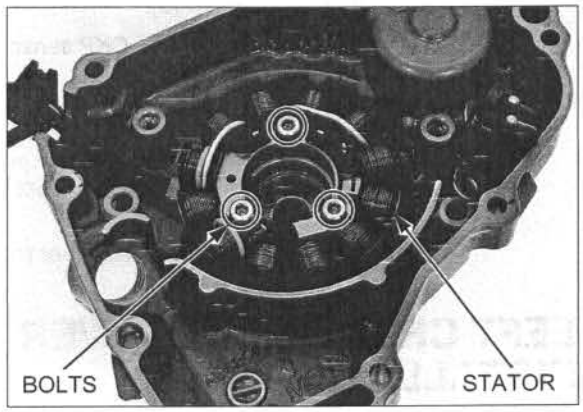

INSTALLATION

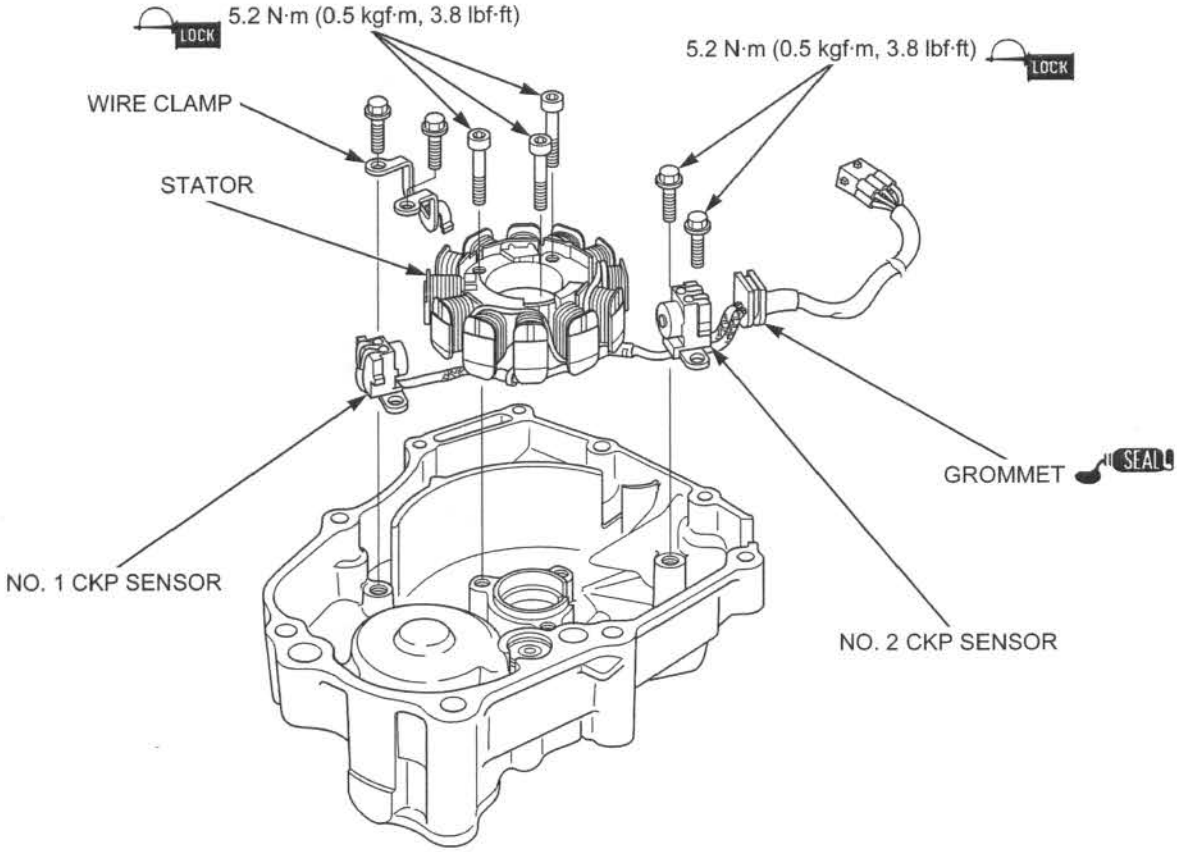

Place the stator into the left crankcase cover.

Apply locking agent to the stator mounting socket bolt threads (page 1-13).

Install and tighten the stator mounting socket bolts to the specified torque.

TORQUE: 5.2 N·m (0.5 kgf·m, 3.8 lbf·ft)

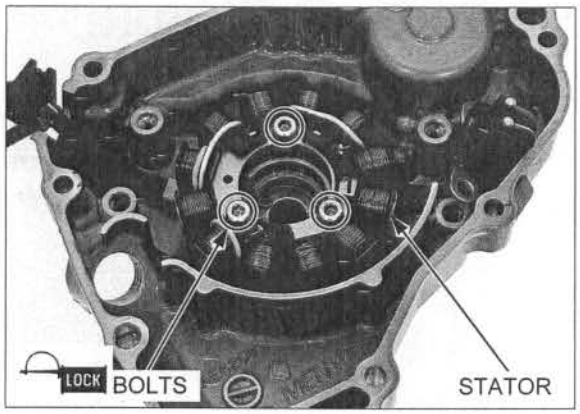

Route the CKP sensor wires properly (page 1-19).

Install the CKP sensors and wire clamp into the left crankcase cover.

Apply locking agent to the CKP sensor mounting bolt threads (page 1-13).

Install and tighten the CKP sensor mounting bolts to the specified torque.

TORQUE: 5.2 N·m (0.5 kgf·m, 3.8 lbf·ft)

Apply liquid sealant to the wire grommet seating surface, and install the grommet into the left crankcase cover.

Install the left crankcase cover (page 12-8).

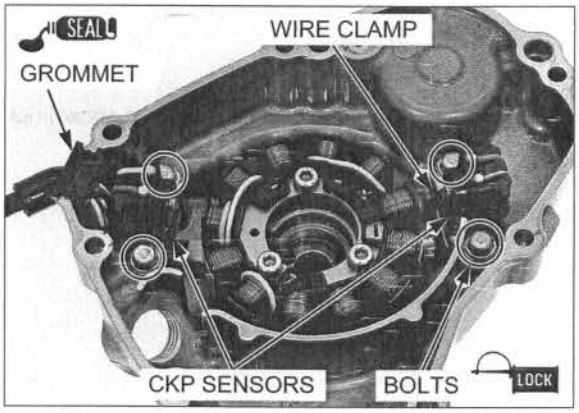

LEFT CRANKCASE COVER INSTALLATION

Install the dowel pins and a new gasket.

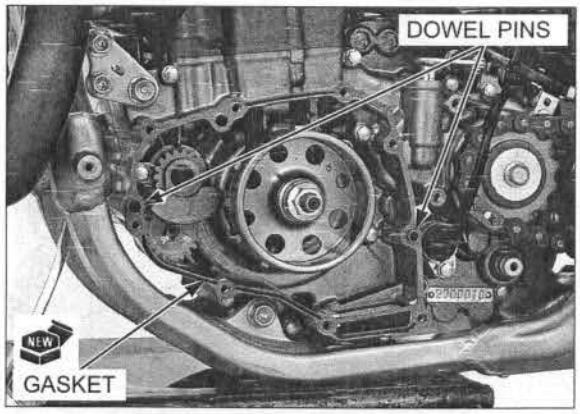

The left crankcase cover (stator) is magnetically attracted to the flywheel, be careful during installation.

Install the left crankcase cover and left crankcase cover bolts.

- Be careful not to damage the oil seal of the left crankcase cover.

Tighten the left crankcase cover bolts to the specified torque in a crisscross pattern in two or three steps.

TORQUE: 12 N·m (1.2 kgf·m, 9 lbf·ft)

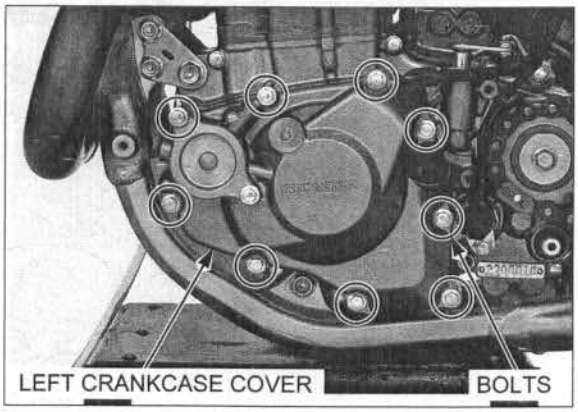

'09: Connect the alternator/CKP sensor 6P (Natural) connector.

Install the wire bands.

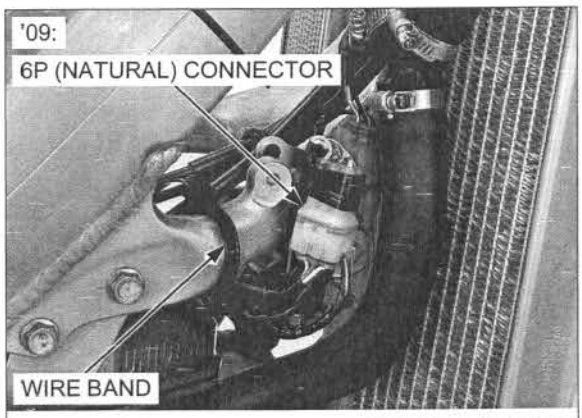

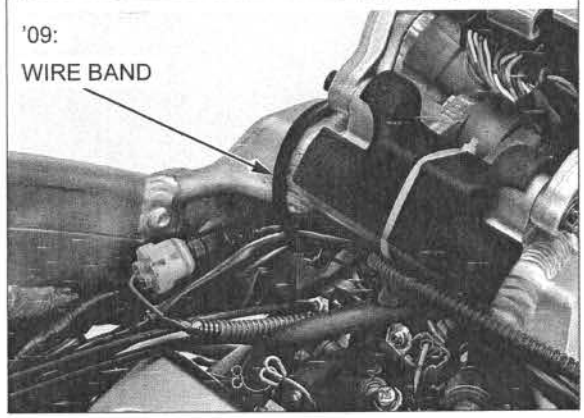

After '09: Connect the alternator/CKP sensor 6P (Black) connector.

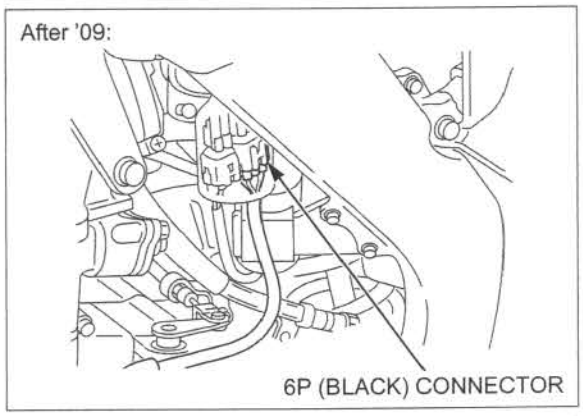

NOTE:
Route the wire properly (page 1-19).

Install the following:

- Gearshift pedal (page 11-24)
- Engine guard (page 3-5)
- Drive sprocket cover (page 4-21)

'09: Install the fuel tank (page 4-6).

Fill the engine with the recommended oil (page 4-15).

MEMO

13. CRANKCASE/CRANKSHAFT/TRANSMISSION/BALANCER

COMPONENT LOCATION

'09 shown:

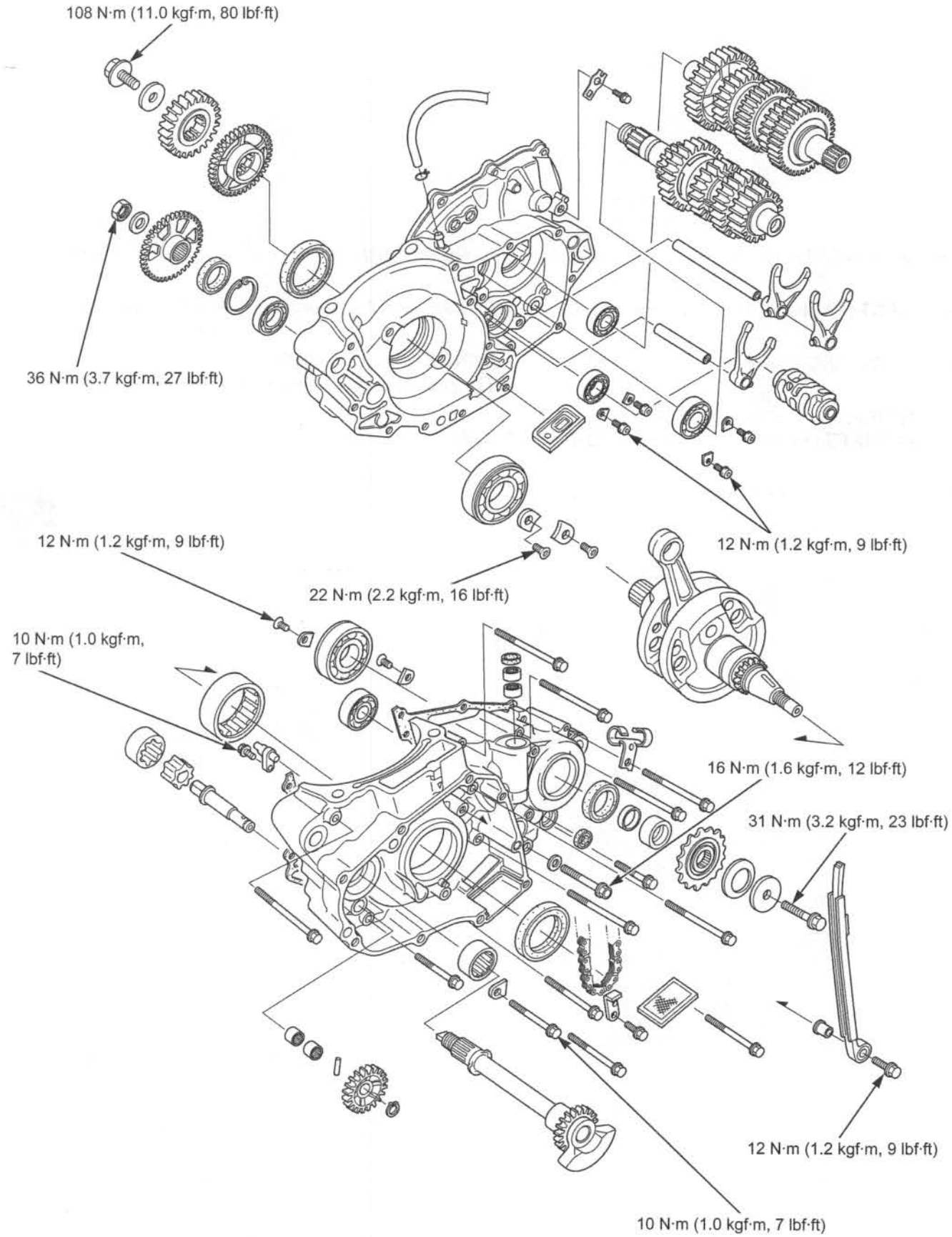

SERVICE INFORMATION

GENERAL

- This section covers crankcase separation for service of the crankshaft, transmission and balancer.
- The crankcase must be separated to service the crankshaft and transmission. To service these parts, the engine must be removed from the frame.
- The balancer can be serviced with the engine installed in the frame.
- The following parts must be removed before separating the crankcase.
  - Cylinder head (page 9-17)
  - Cylinder (page 10-5)/Piston (page 10-6)
  - Clutch (page 11-9)/Kickstarter (page 11-17)/Gearshift linkage (page 11-21)
  - Balancer (page 13-7)
  - Flywheel (page 12-5)
  - Gear position switch (page 17-15) ('09 model only)
  - Engine (page 8-4)
- Be careful not to damage the crankcase mating surfaces when servicing.
- Clean the oil passages before assembling the crankcase halves.

SPECIFICATIONS

Unit: mm (in)

ITEM			STANDARD	SERVICE LIMIT
Crankshaft	Side clearance		0.30 – 0.55 (0.012 – 0.022)	0.6 (0.02)
	Radial clearance		0.006 – 0.018 (0.0002 – 0.0007)	0.05 (0.002)
	Runout	R	–	0.03 (0.001)
		L	–	0.05 (0.002)
Transmission	Gear I.D.	M4	28.007 – 28.028 (1.1026 – 1.1035)	28.05 (1.104)
		M5	28.020 – 28.033 (1.1031 – 1.1037)	28.07 (1.105)
		C2	30.020 – 30.041 (1.1819 – 1.1827)	30.07 (1.184)
		C3	28.020 – 28.041 (1.1031 – 1.1040)	28.07 (1.105)
	Bushing O.D.	M4, M5, C3	27.959 – 27.980 (1.1007 – 1.1016)	27.95 (1.100)
		C2	29.979 – 30.000 (1.1803 – 1.1811)	29.95 (1.179)
	Bushing I.D.	M5	25.000 – 25.021 (0.9843 – 0.9851)	25.04 (0.986)
		C2	27.000 – 27.021 (1.0630 – 1.0638)	27.04 (1.065)
		C3	24.985 – 25.006 (0.9837 – 0.9837)	25.02 (0.985)
	Gear-to-bushing clearance	M4	0.027 – 0.069 (0.0011 – 0.0027)	0.11 (0.004)
		M5	0.040 – 0.074 (0.0016 – 0.0029)	0.12 (0.005)
		C2	0.020 – 0.062 (0.0008 – 0.0024)	0.12 (0.005)
		C3	0.040 – 0.082 (0.0016 – 0.0032)	0.12 (0.005)
	Mainshaft O.D.	at M5 bushing	24.959 – 24.980 (0.9826 – 0.9835)	24.94 (0.982)
	Countershaft O.D.	at C2 bushing	26.959 – 26.980 (1.0614 – 1.0622)	26.94 (1.061)
		at C3 bushing	24.959 – 24.980 (0.9826 – 0.9835)	24.94 (0.982)
	Bushing-to-shaft clearance	M5, C2	0.020 – 0.062 (0.0008 – 0.0024)	0.12 (0.005)
		C3	0.005 – 0.047 (0.0002 – 0.0019)	0.08 (0.003)
Shift fork, shift fork shaft	Fork claw thickness		4.93 – 5.00 (0.194 – 0.197)	4.8 (0.19)
	Shift fork I.D.	Center	11.003 – 11.024 (0.4332 – 0.4340)	11.04 (0.435)
		Right and Left	12.035 – 12.056 (0.4738 – 0.4746)	12.07 (0.475)
	Fork shaft O.D.	Center	10.969 – 10.980 (0.4318 – 0.4323)	10.96 (0.431)
		Right and Left	11.966 – 11.984 (0.4711 – 0.4718)	11.95 (0.470)

TORQUE VALUES

Balancer shaft bearing set plate bolt	10 N·m (1.0 kgf·m, 7 lbf·ft)	Apply locking agent to the threads (page 13-13).
Crankshaft bearing set plate torx screw	22 N·m (2.2 kgf·m, 16 lbf·ft)	Apply locking agent to the threads (Pro Honda Hondalock 3 or equivalent high strength locking agent) (page 13-24).
Countershaft bearing set plate torx screw	12 N·m (1.2 kgf·m, 9 lbf·ft)	Apply locking agent to the threads.
Gearshift drum bearing set plate bolt	12 N·m (1.2 kgf·m, 9 lbf·ft)	Apply locking agent to the threads.
Mainshaft bearing set plate bolt	12 N·m (1.2 kgf·m, 9 lbf·ft)	Apply locking agent to the threads.
Drive sprocket bolt	31 N·m (3.2 kgf·m, 23 lbf·ft)	
Primary drive gear bolt	108 N·m (11.0 kgf·m, 80 lbf·ft)	Apply engine oil to the threads.
Balancer shaft lock nut	36 N·m (3.7 kgf·m, 27 lbf·ft)	Apply engine oil to the threads.
Cam chain tensioner bolt	12 N·m (1.2 kgf·m, 9 lbf·ft)	Apply locking agent to the threads (page 13-14).
Transmission oil drain bolt	16 N·m (1.6 kgf·m, 12 lbf·ft)	Apply engine oil to the threads and seating surface.
Oil jet bolt	10 N·m (1.0 kgf·m, 7 lbf·ft)	Apply locking agent to the threads (page 13-30).

TOOLS

Bearing remover set, 17 mm 07936-3710300 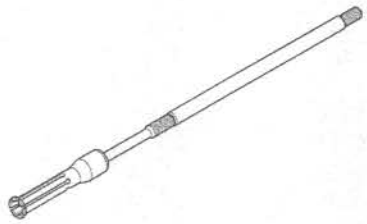	Bearing remover set, 20 mm 07936-3710600 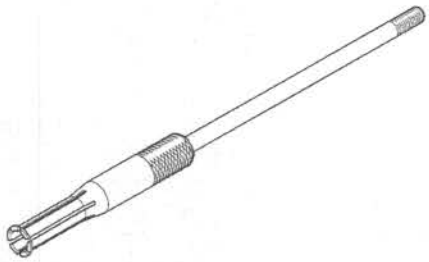	Remover weight 07741-0010201 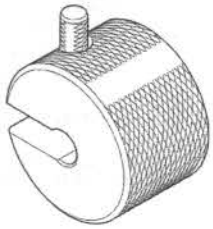 or 07936-371020A (U.S.A.only)
Remover handle 07936-3710100 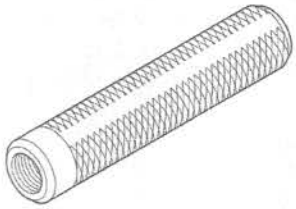	Driver 07749-0010000 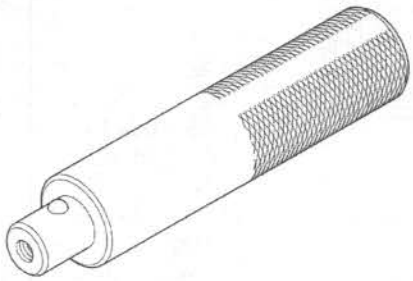	Attachment, 62 x 68 mm 07746-0010500 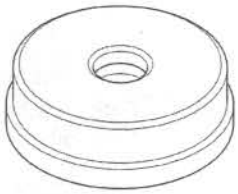
Attachment, 52 x 55 mm 07746-0010400 	Attachment, 37 x 40 mm 07746-0010200 	Attachment, 32 x 35 mm 07746-0010100 

Attachment, 42 x 47 mm 07746-0010300 	Pilot, 20 mm 07746-0040500 	Pilot, 30 mm 07746-0040700 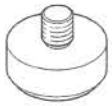
Pilot, 17 mm 07746-0040400 	Pilot, 25 mm 07746-0040600 	Gear holder, M1.5 07724-0010200  or 07724-001A200 (U.S.A. only)
Gear holder, M2.5 07724-0010100  or 07724-001A100 (U.S.A. only)	Universal holder 07725-0030000 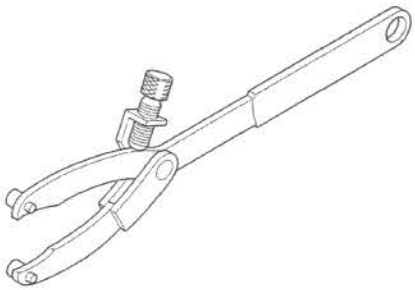	Pilot, 15 mm 07746-0040300 
Bearing remover shaft, 10 mm 07936-GE00100  or 07936-GE0A000 (U.S.A. only)	Bearing remover head, 10 mm 07936-GE00200 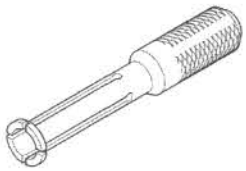	Valve guide driver, 8.0 mm 07ZMD-MCH0100 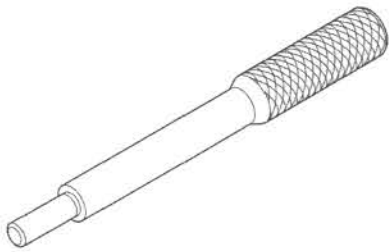 or 07ZMD-MCHA100 (U.S.A. only)

TROUBLESHOOTING

Excessive noise
- Worn crankshaft bearings
- Worn or damaged connecting rod big end bearing
- Worn connecting rod small end (page 10-8)
- Worn balancer shaft bearings
- Improper balancer installation
- Worn, seized or chipped transmission gear
- Worn or damaged transmission bearing
- Incorrect valve adjustment (page 4-13)
- Sticking valve or broken valve spring (page 9-22)
- Worn or damaged camshaft (page 9-12)
- Worn or damaged valve lifter (page 9-22)
- Worn or loose cam chain
- Worn or damaged cam chain tensioner (page 9-19)
- Worn cam sprocket teeth (page 9-12)
- Faulty cylinder, piston or piston rings (page 10-6)

Transmission jumps out of gear
- Worn gear dogs
- Worn gear shifter groove
- Bent shift fork shaft
- Broken gearshift drum stopper arm (page 11-21)
- Broken gearshift drum stopper arm spring (page 11-21)
- Loose gearshift drum stopper arm bolt (page 11-21)
- Worn or bent shift forks
- Weak or broken gearshift spindle return spring

Hard to shift
- Improper clutch lever freeplay adjustment (page 4-27)
- Incorrect transmission oil viscosity (page 4-18)
- Bent shift fork
- Bent shift fork shaft
- Bent shift fork claw
- Damaged gearshift drum guide grooves
- Damaged gearshift spindle (page 11-22)
- Damaged gearshift drum stopper arm and pin (page 11-21)
- Loose gearshift drum stopper arm bolt (page 11-21)
- Bent shift spindle

Engine vibration
- Excessive crankshaft runout
- Improper balancer timing

BALANCER GEAR/BALANCER SHAFT

REMOVAL

This service can be performed with the engine installed in the frame.

Remove the following:

- Right crankcase cover (page 11-6)
- Left crankcase cover (page 12-4)
- Clutch (page 11-9)

Temporarily install the clutch outer guide, needle bearing and clutch outer to the mainshaft.

Insert the gear holder between the primary drive and driven gears.

TOOL:

Gear holder, M2.5	**07724-0010100 or 07724-001A100 (U.S.A. only)**

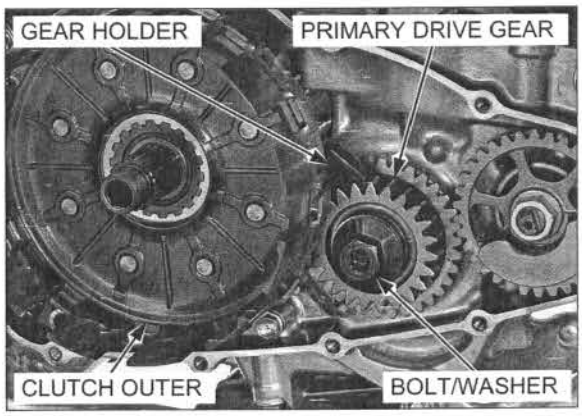

Remove the primary drive gear bolt and washer, then remove the gear holder.

Remove the clutch outer, needle bearing, outer guide and primary drive gear.

Check the primary drive gear for wear or damage.

Replace the primary drive gear if necessary.

Insert the gear holder between the balancer drive and driven gears.

TOOL:

Gear holder, M1.5	**07724-0010200 or 07724-001A200 (U.S.A. only)**

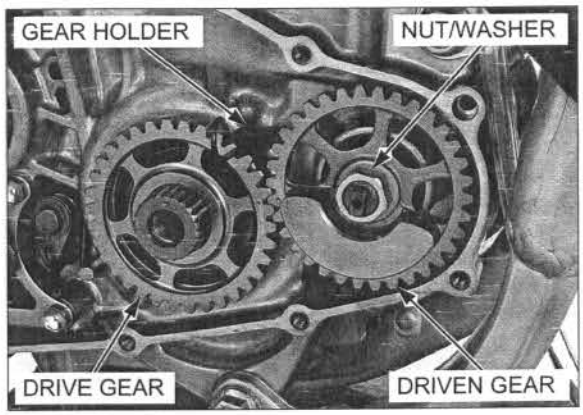

Remove the balancer shaft lock nut and washer.

Remove the gear holder.

Remove the balancer driven and drive gears.

Check the balancer drive and driven gears for wear or damage.

Replace them if necessary.

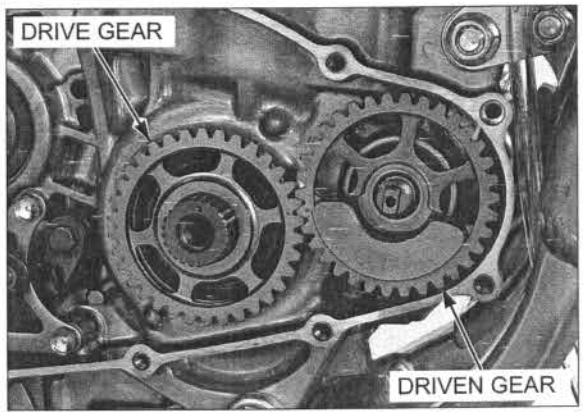

'09: Turn the balancer shaft as shown and remove it.

After '09: Pull the balancer shaft and turn its weight to clockwise to clear the flywheel, and then remove the balancer shaft.

Check the balancer shaft for wear, damage or excessive scratches.

Replace the balancer shaft if necessary.

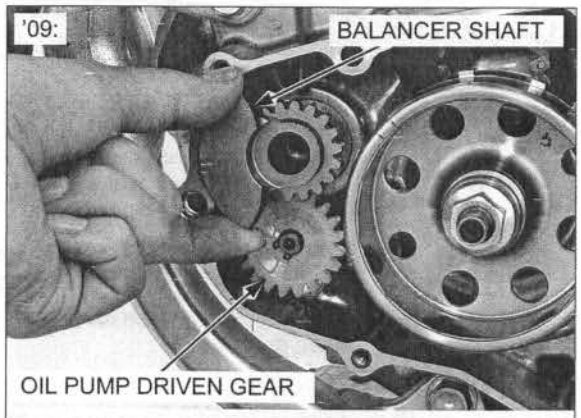

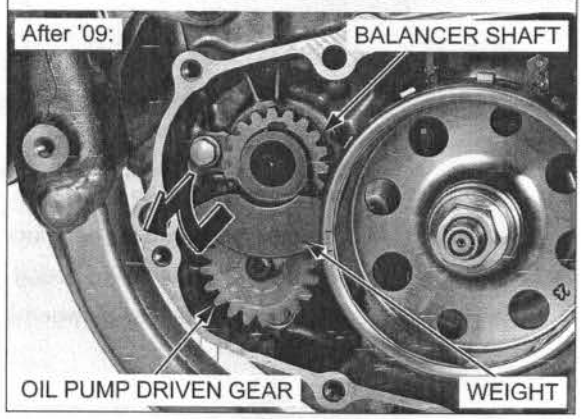

INSTALLATION

Engage the balancer shaft gear portion with oil pump driven gear.

Install the balancer shaft into the crankcase as shown.

Check the oil seal for wear or damage, replace it if necessary (page 13-23).

Install the balancer drive gear with the flat side facing toward the outside of the crankcase.

Install the balancer drive gear while aligning its wide cut-out in the splines with the punch mark on the crankshaft.

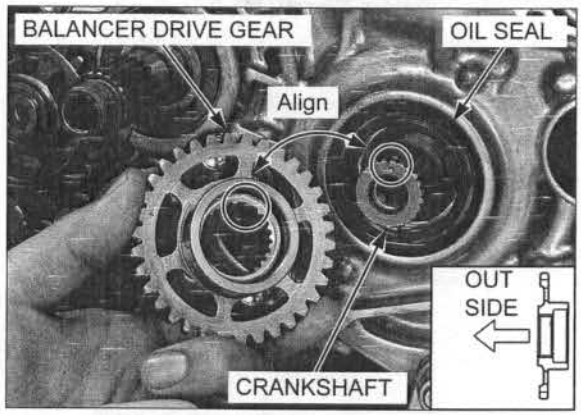

Check the oil seal for wear or damage, replace it if necessary (page 13-25).

Install the balancer driven gear into the balancer shaft while aligning its wide cut-out in the splines with the punch mark on the balancer shaft.

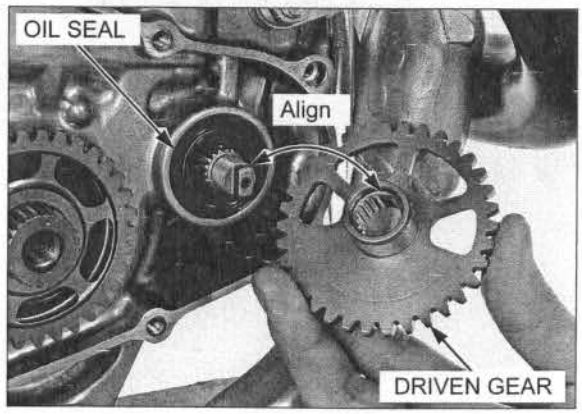

Align the punch mark of the driven gear with the punch mark of the drive gear.

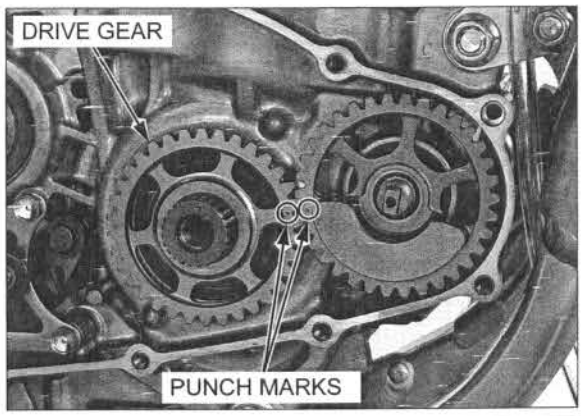

Insert the gear holder between the balancer drive and driven gears.

TOOL:

Gear holder, M1.5	**07724-0010200 or 07724-001A200 (U.S.A. only)**

Apply engine oil to the balancer shaft lock nut threads. Install and tighten the balancer shaft lock nut to the specified torque.

TORQUE: 36 N·m (3.7 kgf·m, 27 lbf·ft)

Remove the gear holder.

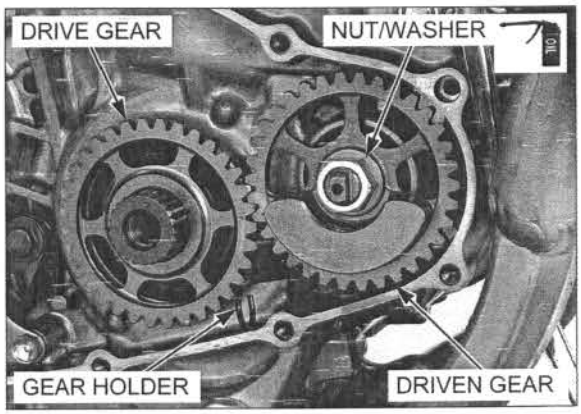

Install the primary drive gear with the Punch mark side facing out.

Install the primary drive gear by aligning its wide cut-out in the splines with the punch mark on the crankshaft.

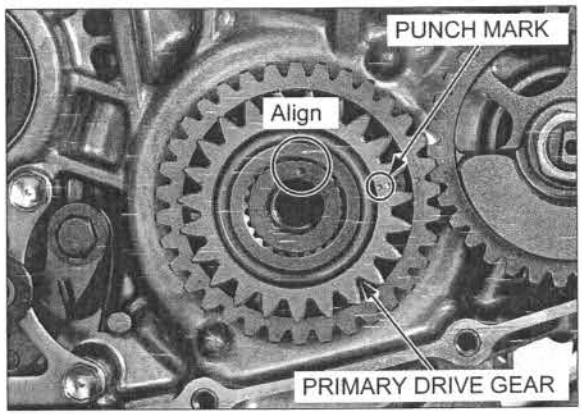

Temporarily install the clutch outer guide, needle bearing and clutch outer to the mainshaft.

Insert the gear holder between the primary drive and driven gears.

TOOL:

Gear holder, M2.5	**07724-0010100 or 07724-001A100 (U.S.A. only)**

Apply engine oil to the primary drive gear bolt threads.

Install the washer and bolt, and tighten the bolt to the specified torque.

TORQUE: 108 N·m (11.0 kgf·m, 80 lbf·ft)

Remove the gear holder.

Install the following:

- Left crankcase cover (page 12-8)
- Right crankcase cover (page 11-7)
- Clutch (page 11-12)

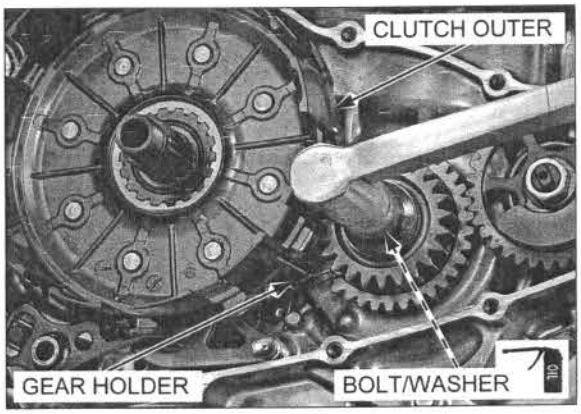

CRANKCASE

SEPARATION

For removal of necessary parts before separating the crankcase (page 13-3).

Remove the bolt and hose guide.

Disconnect the transmission breather hose from the right crankcase.

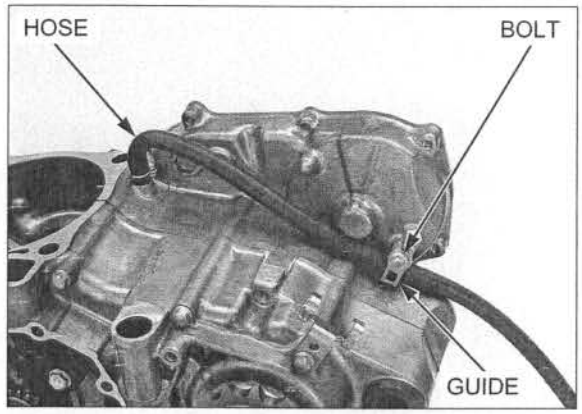

Loosen the drive sprocket bolt while holding the sprocket with the special tool as shown.

TOOL:
Universal holder **07725-0030000**

Remove the drive sprocket bolt, collar, washer and drive sprocket.

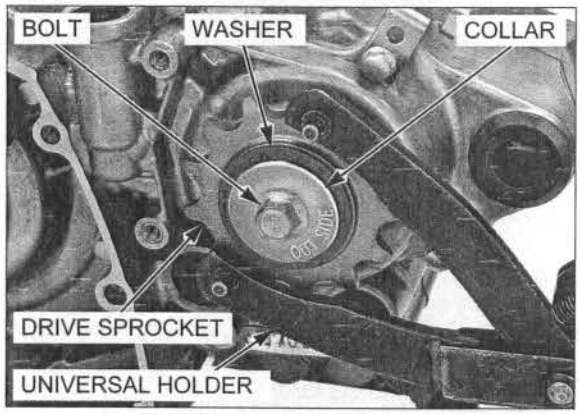

Be careful not to damage the collar and countershaft.

Remove the countershaft collar and O-ring.

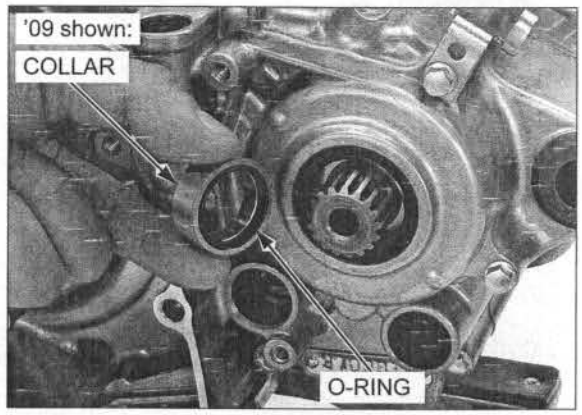

Remove the bolt, collar and cam chain tensioner.

Remove the bolt, stopper plate and cam chain.

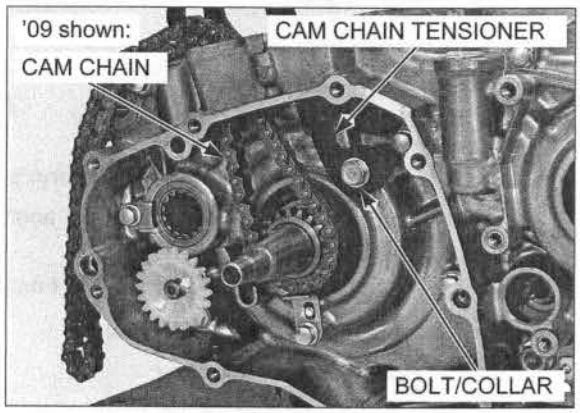

Remove the snap ring, oil pump driven gear and drive pin.

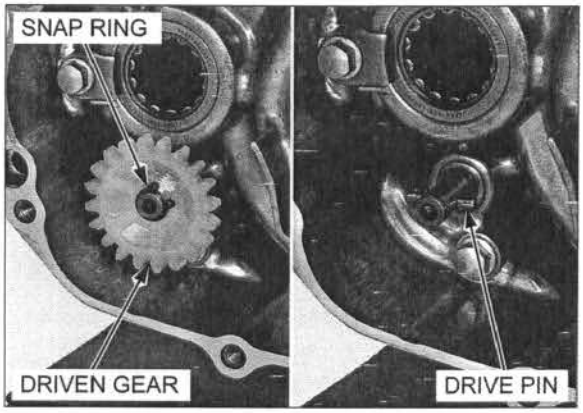

Remove the transmission oil drain bolt and sealing washer.

Loosen the crankcase bolts in a crisscross pattern in two or three steps.
Remove the crankcase bolts, balancer shaft bearing set plate and stay.

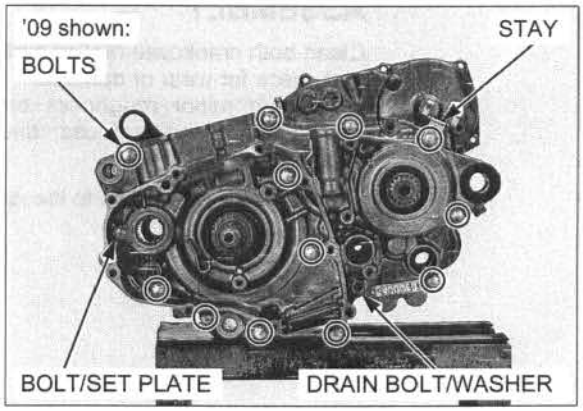

Place the left crankcase facing down and separate the left and right crankcase halves.

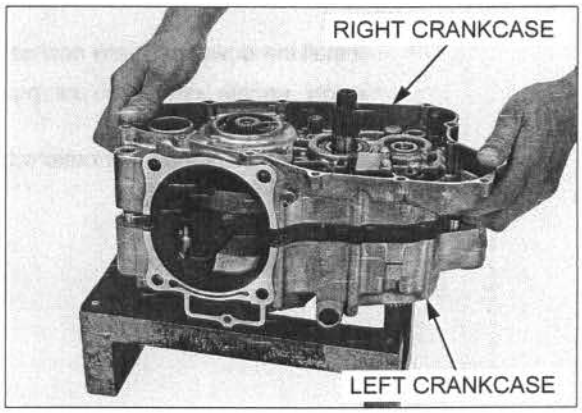

Remove the dowel pins and gasket.
Remove the oil pump inner/outer rotors and oil pump shaft.

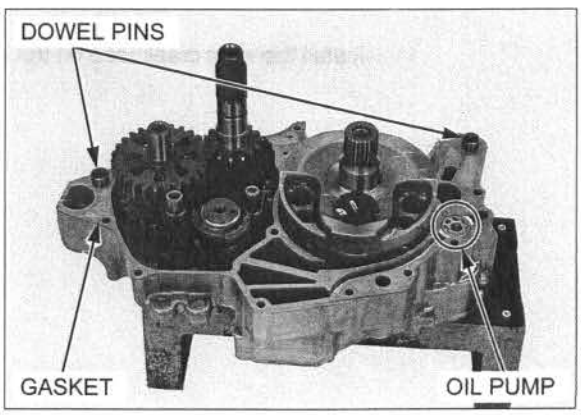

Remove the one-way valve from the right crankcase halves.

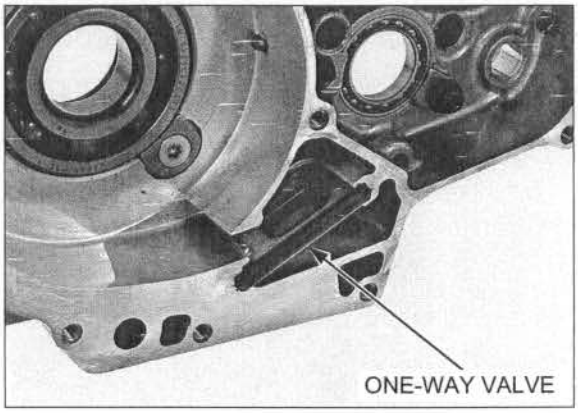

ASSEMBLY

Clean both crankcase mating surfaces before assembly and check for wear or damage.
If there is minor roughness or irregularities on the crankcase mating surfaces, dress them with an oil stone.

Install the one-way valve to the right crankcase halves.

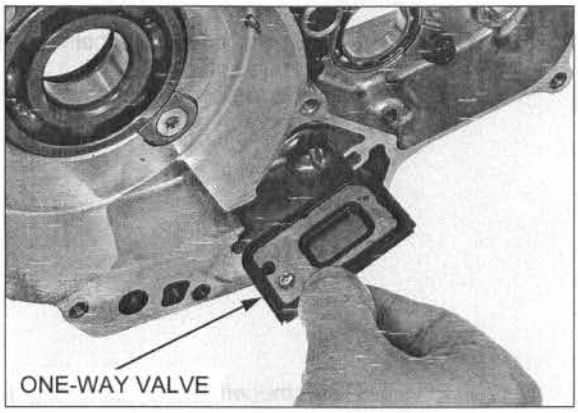

Install the dowel pins and new gasket.

Apply engine oil to the oil pump inner/outer rotors sliding area.

Install the oil pump inner/outer rotors and oil pump shaft in the left crankcase.

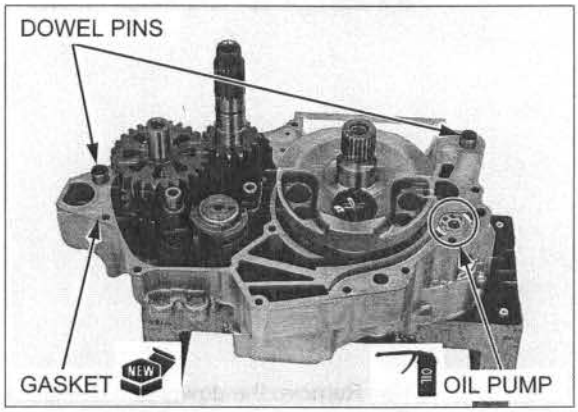

Install the right crankcase on the left crankcase.

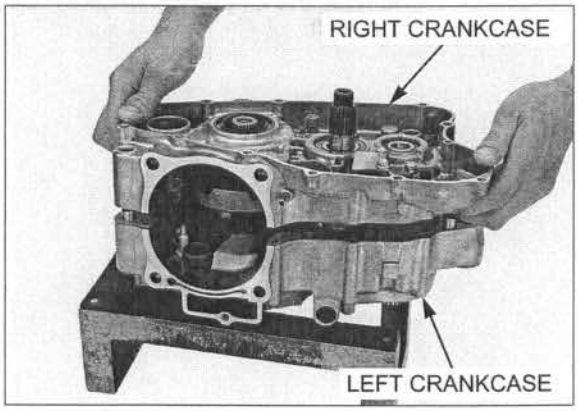

Apply locking agent to the balancer shaft bearing set plate bolt threads as shown.

Install the balancer shaft bearing set plate and bolt.

NOTE:
Install the balancer shaft bearing set plate with its tab facing up.

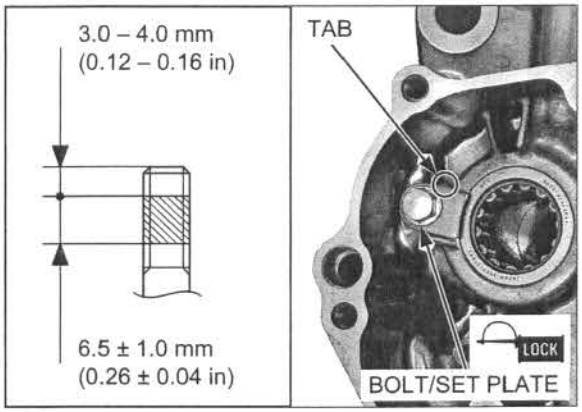

Install the stay and crankcase bolts.

Apply engine oil to the transmission oil drain bolt threads and seating surface.

Install a new sealing washer to the transmission oil drain bolt, and install them to the left crankcase.

Tighten the crankcase bolts in a crisscross pattern in two or three progressive steps.

After tightening the crankcase bolts, tighten the transmission oil drain bolt first, then tighten the balancer shaft bearing set plate bolts to the specified torque.

TORQUE:
Transmission oil drain bolt:
16 N·m (1.6 kgf·m, 12 lbf·ft)
Balancer shaft bearing set plate bolt:
10 N·m (1.0 kgf·m, 7 lbf·ft)

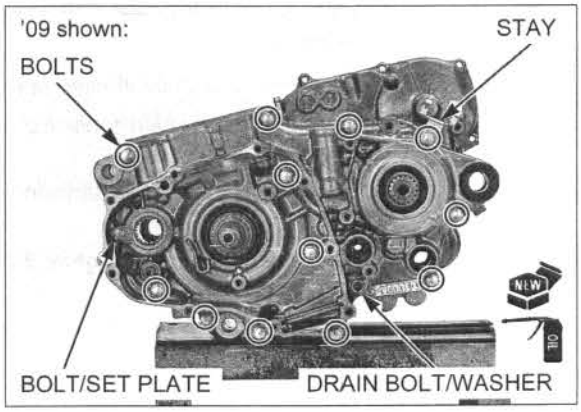

Carefully trim the protruding gasket material from the cylinder base gasket surface.

NOTE:
- Do not let gasket material fall into the crankcase.
- Do not damage the cylinder mating surface.

Check that the crankshaft turns smoothly.

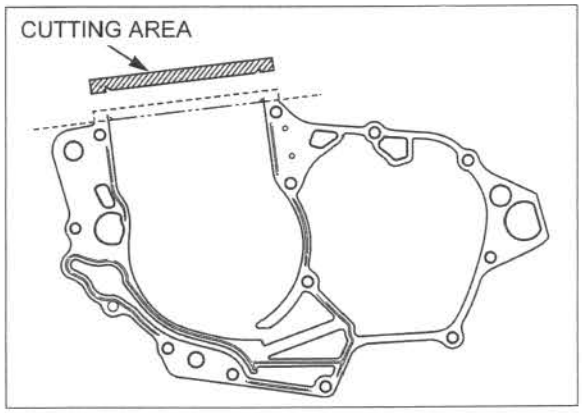

Install the drive pin to the oil pump shaft.

Install the oil pump driven gear by aligning its cut-outs with the drive pin.

Install the snap ring securely.

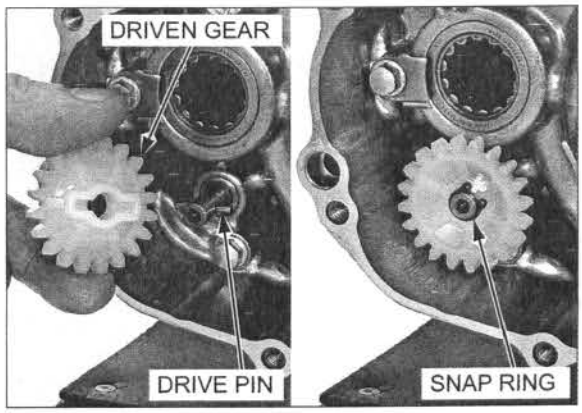

Clean and apply locking agent to the cam chain tensioner bolt threads as shown.

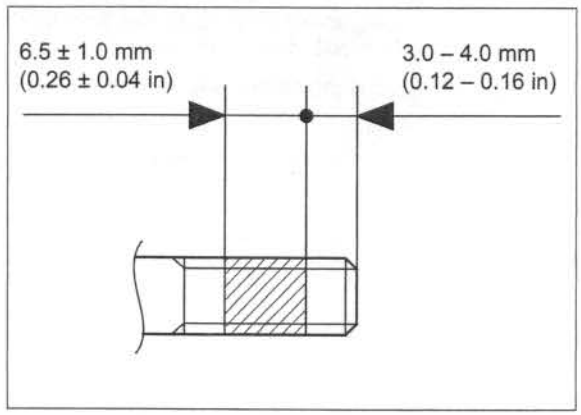

Apply engine oil to the cam chain, and install it to the timing sprocket.

Align the stopper plate hole with the crankcase boss.

Install the cam chain stopper plate and tighten the bolt.

Install the cam chain tensioner, collar and cam chain tensioner bolt.

Tighten the cam chain tensioner bolt to the specified torque.

TORQUE: 12 N·m (1.2 kgf·m, 9 lbf·ft)

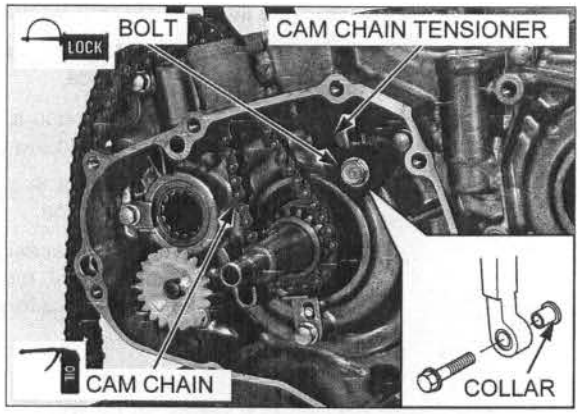

Apply grease to a new countershaft O-ring, and install it to the countershaft collar.
Install them to the countershaft.

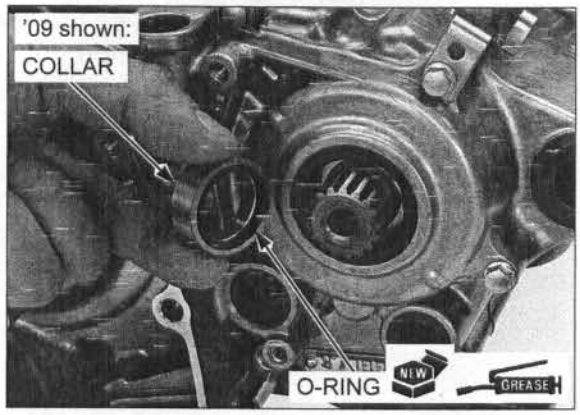

Install the drive sprocket to the countershaft as shown.

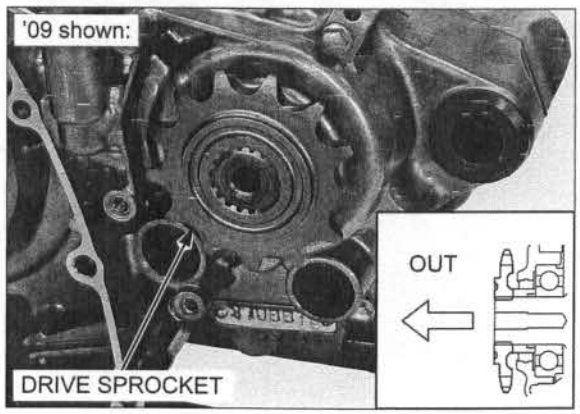

Install the washer and collar with the "OUT SIDE" marks facing out.

Install and tighten the drive sprocket bolt to the specified torque while holding the drive sprocket using the special tool.

TOOL:
Universal holder **07725-0030000**

TORQUE: 31 N·m (3.2 kgf·m, 23 lbf·ft)

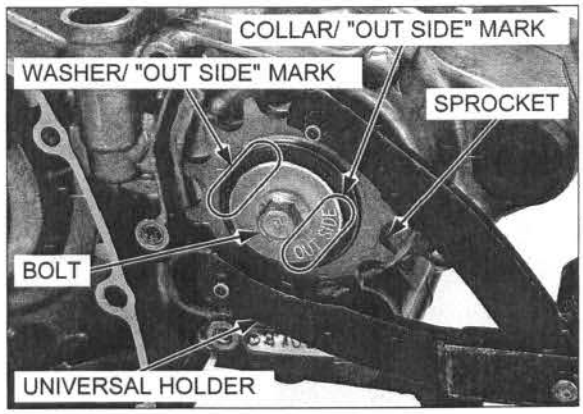

Connect the transmission breather hose to the right crankcase.

Align the hose guide groove with the crankcase boss.

Install the hose guide and tighten the bolt.

Install the remaining parts in the reverse order of removal.

- For installation of the removed parts for crankcase service (page 13-3).

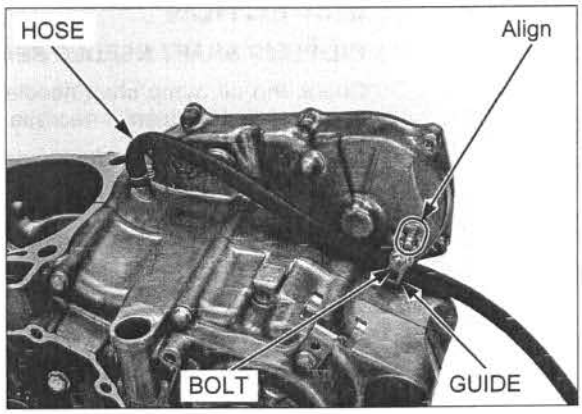

TRANSMISSION

DISASSEMBLY

Separate the crankcase halves (page 13-10).

Temporarily install the right crankcase on the left crankcase.

Place the right crankcase facing down and separate the right and left crankcase halves.

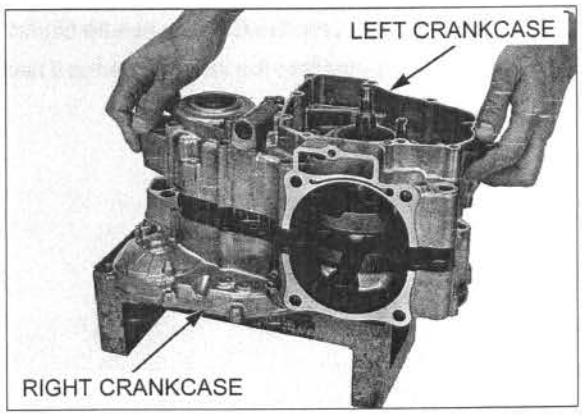

Remove the shift fork shafts.

Remove the shift fork guide pins from the gearshift drum grooves, and remove the gearshift drum.

Remove the shift forks.

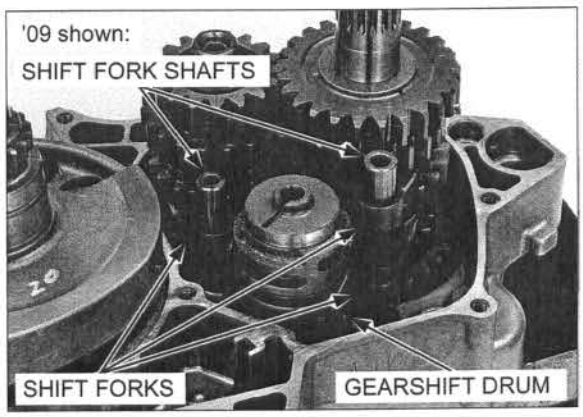

Remove the mainshaft and countershaft assembly from the right crankcase.

Disassemble the transmission:

- Keep track of the disassembled parts (gears, bushings, needle bearing, thrust washers, and snap rings) by sliding them onto a tool or a piece of wire.
- Do not expand the snap ring more than necessary for removal. To remove a snap ring, expand the snap ring and pull it off using the gear behind it.

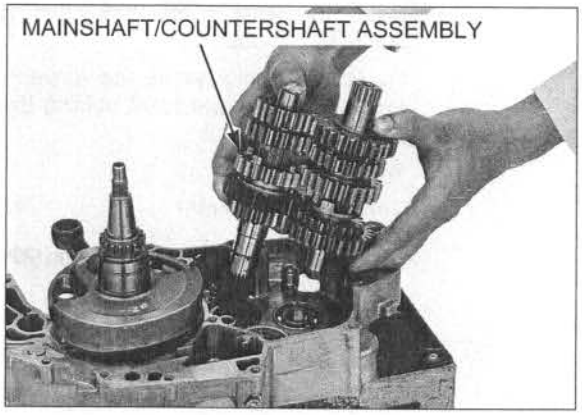

INSPECTION

OIL PUMP SHAFT NEEDLE BEARING

Check the oil pump shaft needle bearings for wear or damage, replace them if necessary (page 13-25).

Also check that the needle bearings fit tightly in the left crankcase.

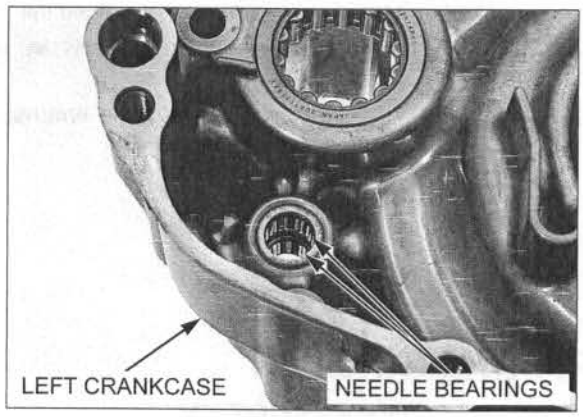

TRANSMISSION NEEDLE BEARING

Check the C1 gear needle bearing for damage.

Replace the needle bearing if necessary.

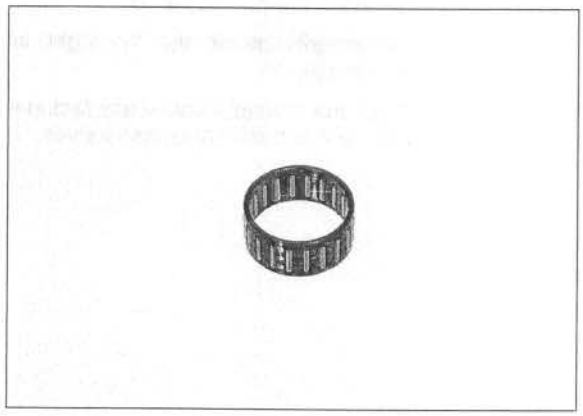

GEAR

Check the gear dogs, dog holders and teeth for damage or excessive wear.

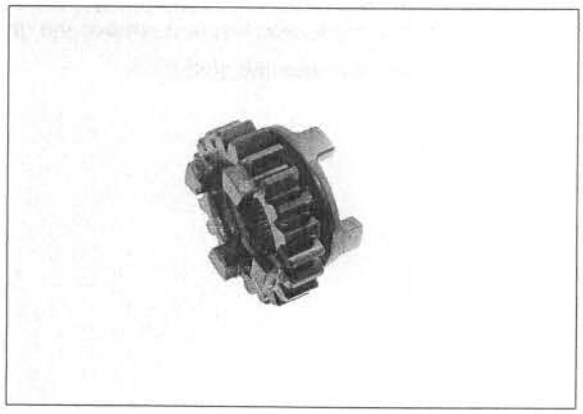

Measure the I.D. of each gear.

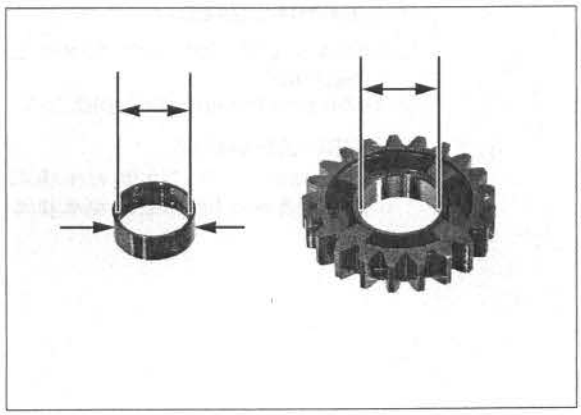

SERVICE LIMITS:
M4: 28.05 mm (1.104 in)
M5, C3: 28.07 mm (1.105 in)
C2: 30.07 mm (1.184 in)

BUSHING

Check the bushings for damage or excessive wear.
Measure the O.D. of each bushing.

SERVICE LIMITS:
M4, M5, C3: 27.95 mm (1.100 in)
C2: 29.95 mm (1.179 in)

Calculate the gear-to-bushing clearance.

SERVICE LIMITS:
M4: 0.11 mm (0.004 in)
M5, C2, C3: 0.12 mm (0.005 in)

Measure the I.D. of each bushing.

SERVICE LIMITS:
M5: 25.04 mm (0.986 in)
C2: 27.04 mm (1.065 in)
C3: 25.02 mm (0.985 in)

MAINSHAFT/COUNTERSHAFT

Check the spline grooves and sliding surfaces for damage or abnormal wear.
Measure the O.D. of the mainshaft and countershaft at the bushing sliding areas.

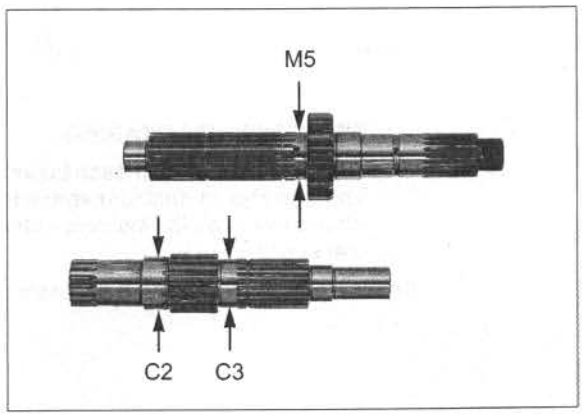

SERVICE LIMITS:
Mainshaft:
(at M5 bushing): 24.94 mm (0.982 in)
Countershaft:
(at C2 bushing): 26.94 mm (1.061 in)
(at C3 bushing): 24.94 mm (0.982 in)

Calculate the bushing-to-shaft clearance.

SERVICE LIMITS:
M5, C2: 0.12 mm (0.005 in)
C3: 0.08 mm (0.003 in)

SHIFT FORK

Check the shift forks for abnormal wear or deformation.
Measure the shift fork I.D. and claw thickness.

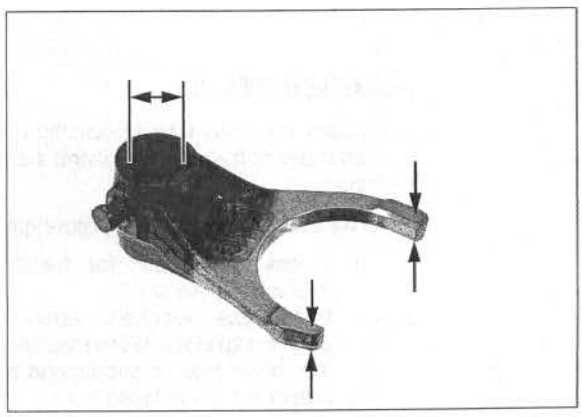

SERVICE LIMITS:
I.D.: Center: 11.04 mm (0.435 in)
Right and left: 12.07 mm (0.475 in)
Claw thickness: 4.8 mm (0.19 in)

SHIFT FORK SHAFT

Check the shift fork shafts for abnormal wear or deformation.
Measure the shift fork shaft O.D.

SERVICE LIMITS:
Center: 10.96 mm (0.431 in)
Right and left: 11.95 mm (0.470 in)

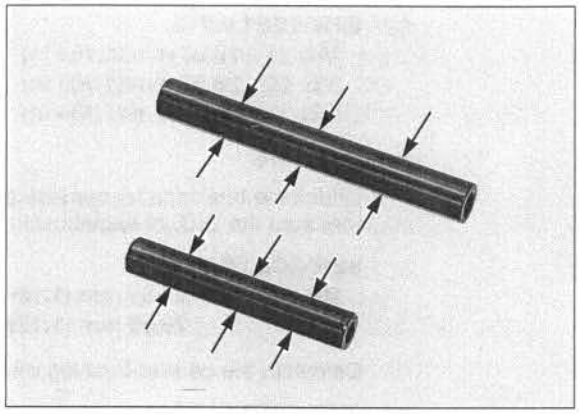

GEARSHIFT DRUM

Inspect the gearshift drum for scoring, scratches or evidence of insufficient lubrication.
Check the gearshift drum grooves for abnormal wear or damage.

Replace it if necessary.

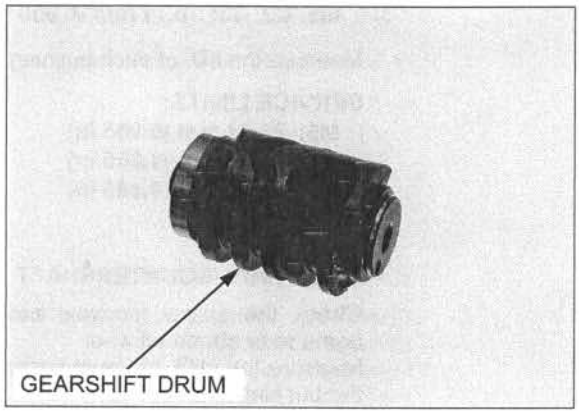

TRANSMISSION BEARING

Turn the inner race of each bearing with your finger.
The bearings should turn smoothly and quietly.
Also check that the bearing outer race fit tightly in the crankcase.

Replace the bearings if necessary (page 13-25).

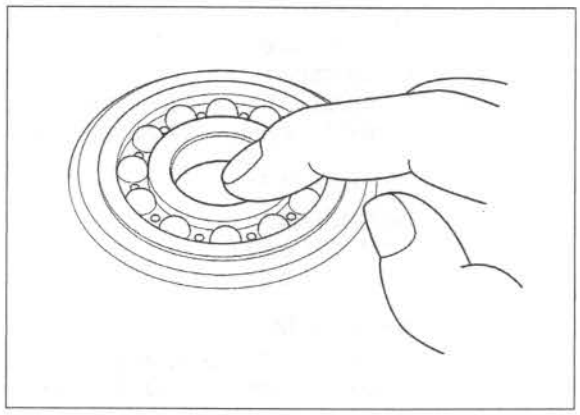

ASSEMBLY

Apply molybdenum oil solution to the mainshaft and countershaft spline area and transmission gear sliding surface.

Assemble all parts into their original positions.

- Check the gears for freedom of movement or rotation on the shaft.
- Install the washers and snap rings with the chamfered edge facing the thrust load side. Confirm the inner side of snap rings and washer when you detect the chamfered side.
- Do not reuse worn snap ring which could easily spin in the groove.
- Check that the snap rings are seated in the shaft grooves, and align their end gaps with the grooves of the spline.

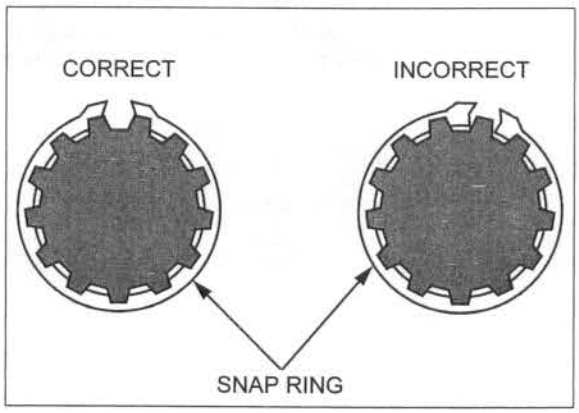

MAINSHAFT:

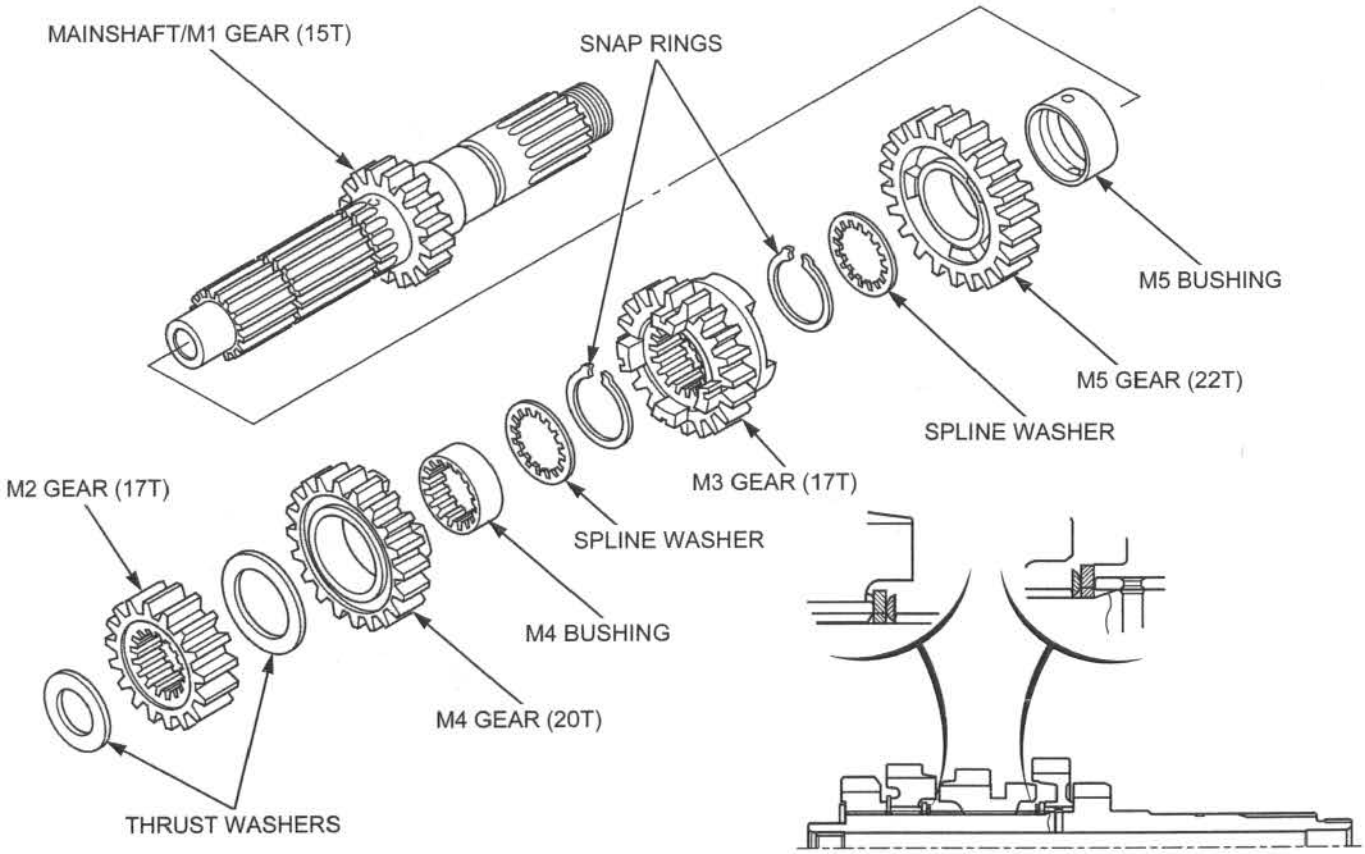

COUNTERSHAFT:

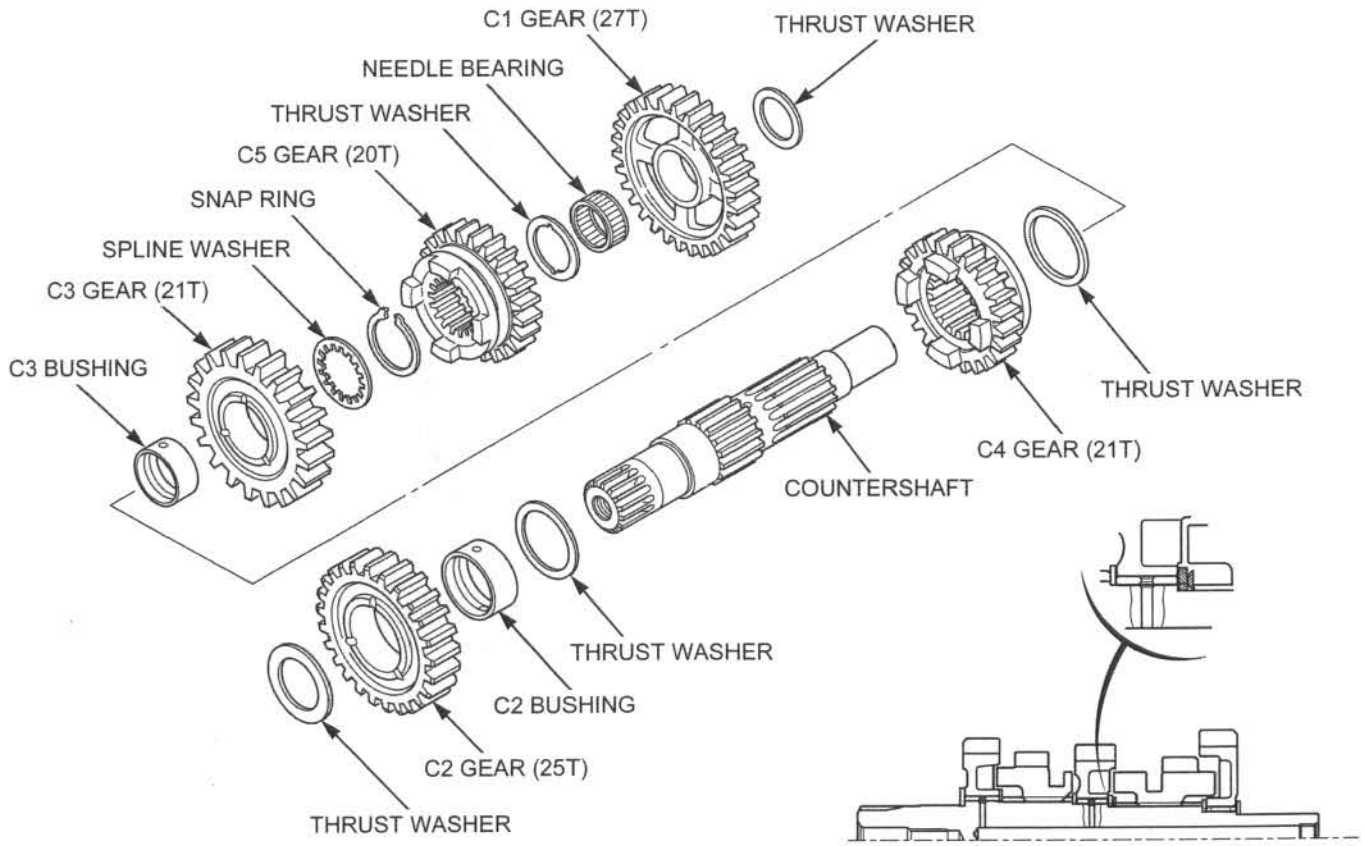

INSTALLATION

Apply molybdenum oil solution to each transmission gear teeth.

Engage the mainshaft and countershaft gears.

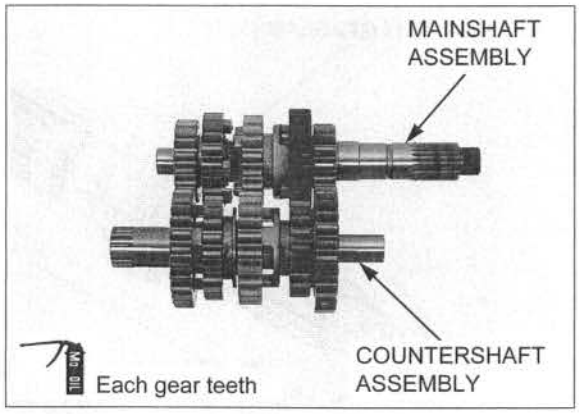

Install the mainshaft and countershaft assembly into the right crankcase.

Make sure the three thrust washers are installed (mainshaft; left only/countershaft; both ends).

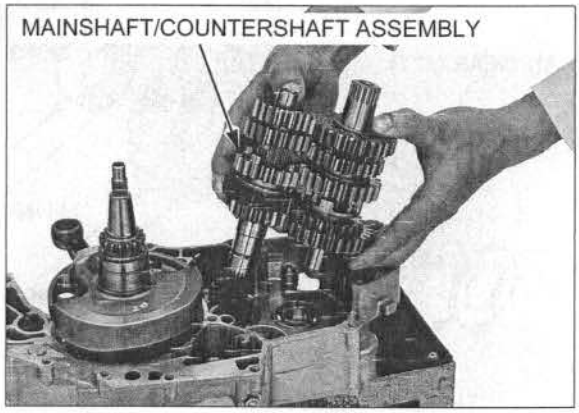

- Each shift fork has an identification mark, "R" is for the right shift fork, "L" is the left shift fork and "C" is for the center shift fork.

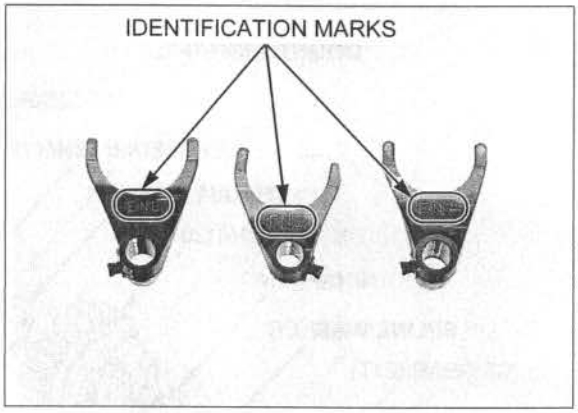

Apply molybdenum oil solution to the shift fork claws and guide pins.

Install the shift forks to the shifter grooves of each sliding gear.

- Face the shift fork marks as follows:
  - Right and left shift fork marks to the left crankcase
  - Center shift fork mark to the right crankcase

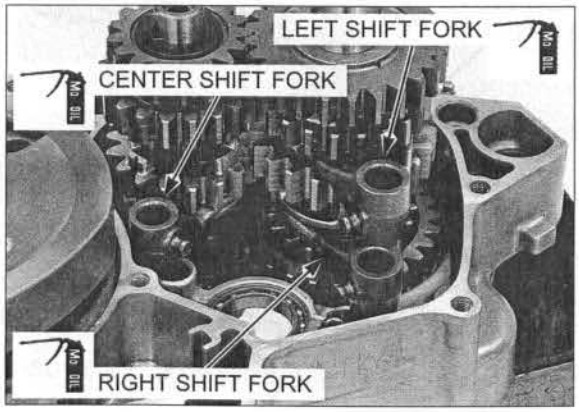

Apply engine oil to the gearshift drum guide grooves.

Install the gearshift drum by aligning the guide pins on the shift forks with the guide grooves in the gearshift drum.

Apply molybdenum oil solution to the shift fork shaft outer surface.

Slide the shift fork shafts through the shift forks into the crankcase.

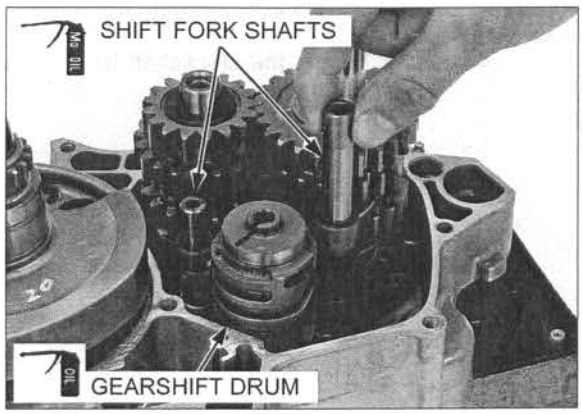

Temporarily install the left crankcase on the right crankcase.

Place the left crankcase facing down, and separate the left and right crankcase halves.

Assemble crankcase halves (page 13-12).

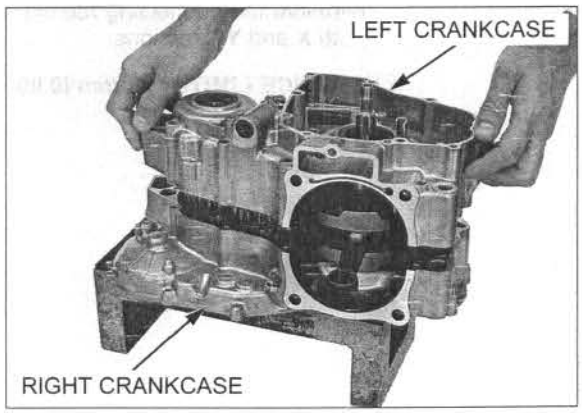

CRANKSHAFT

REMOVAL

Separate the crankcase halves (page 13-10).

Remove the crankshaft from the left crankcase.

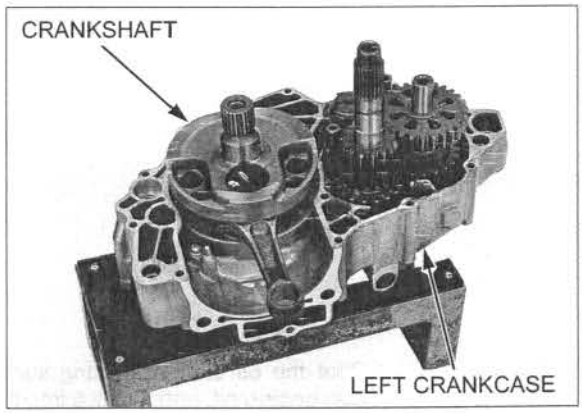

INSPECTION

Turn the inner race of both crankshaft bearings with your finger.
The bearings should turn smoothly and quietly.
Also check that the bearing outer race fits tightly in the crankcase.

Replace the bearings if necessary (page 13-23).

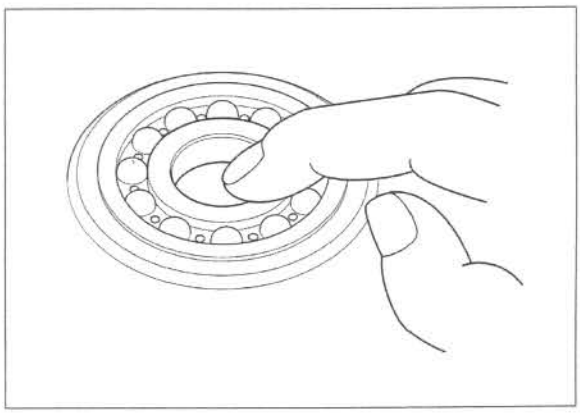

Be careful not to damage the main journal.

Place the crankshaft on a stand or V-blocks.
Set the dial indicator as shown.
Rotate the crankshaft two revolutions (720°) and read the runout.

SERVICE LIMITS:
R: 0.03 mm (0.001 in)
L: 0.05 mm (0.002 in)

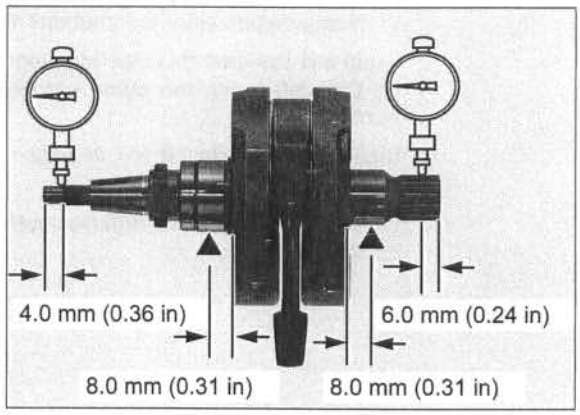

Measure the connecting rod big end radial clearance in both X and Y directions.

SERVICE LIMIT: 0.05 mm (0.002 in)

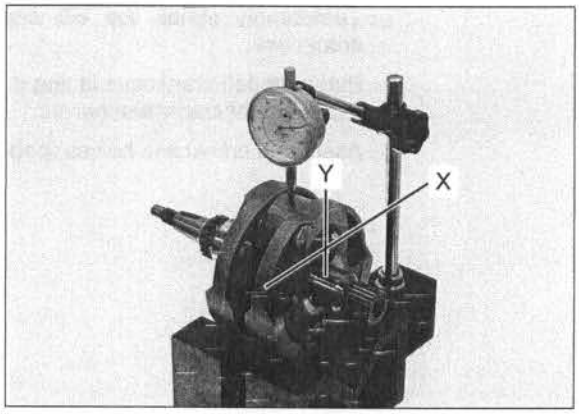

Measure the connecting rod big end side clearance.

SERVICE LIMIT: 0.6 mm (0.02 in)

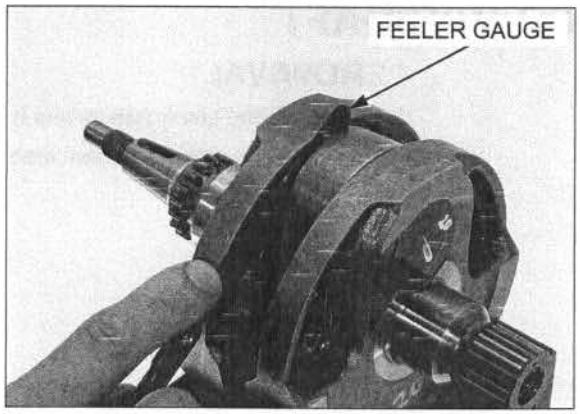

INSTALLATION

Coat the oil seal contacting surface of the crankshaft with engine oil, and install it into the left crankcase.

Assemble the crankcase halves (page 13-12).

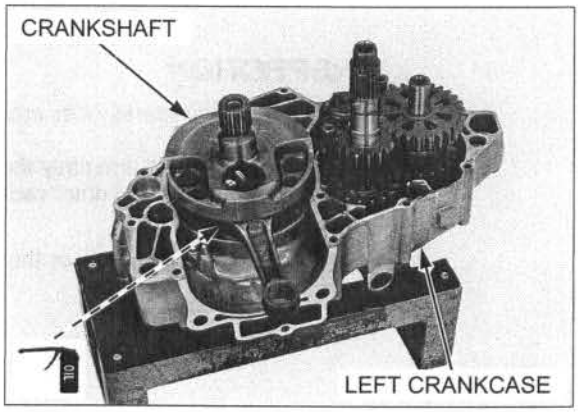

CRANKCASE BEARING REPLACEMENT

CRANKCASE BEARING/OIL SEAL LOCATION

Remove the following:

- Transmission (page 13-15)
- Crankshaft (page 13-21)

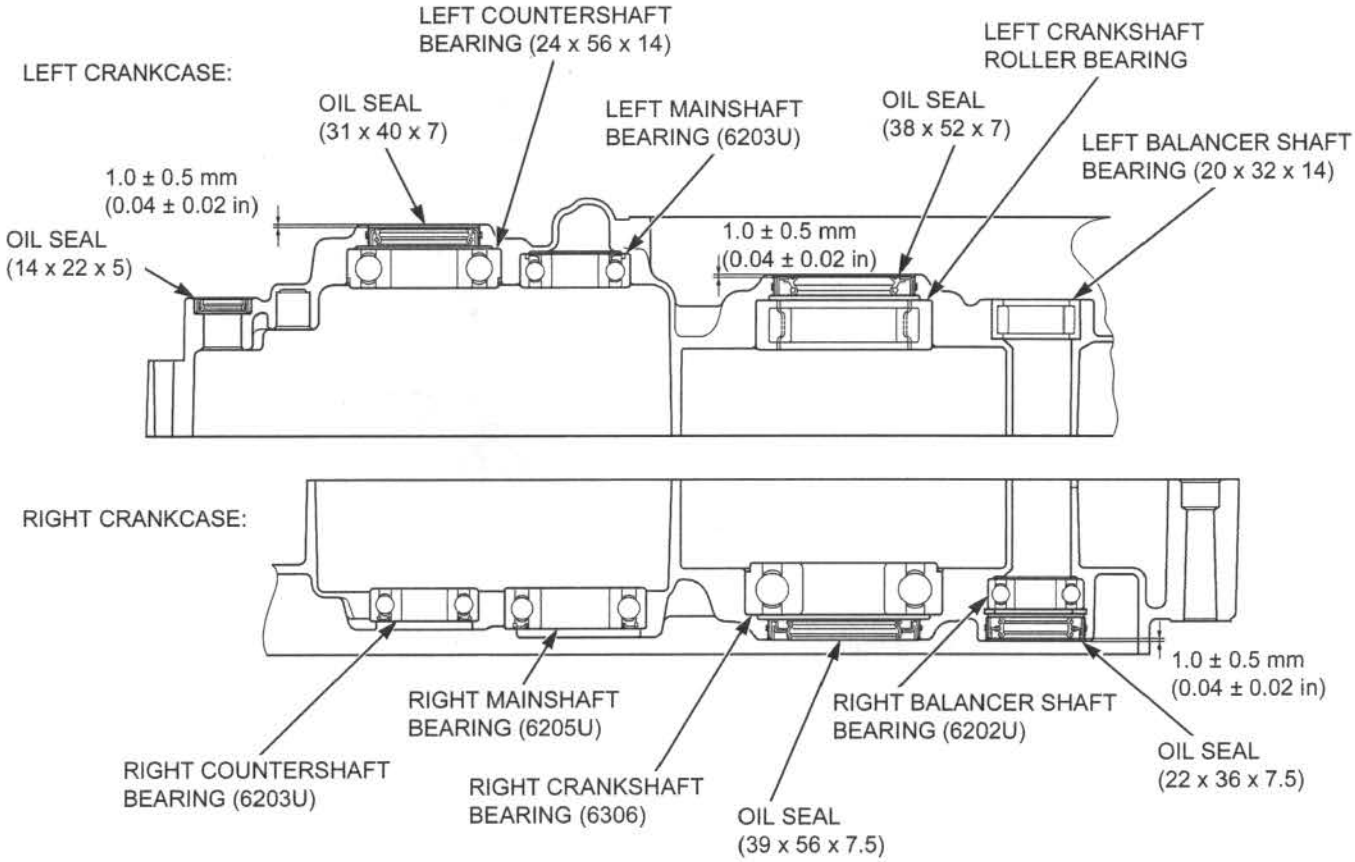

CRANKSHAFT BEARING

Remove the T30 torx screws and right crankshaft bearing set plates.

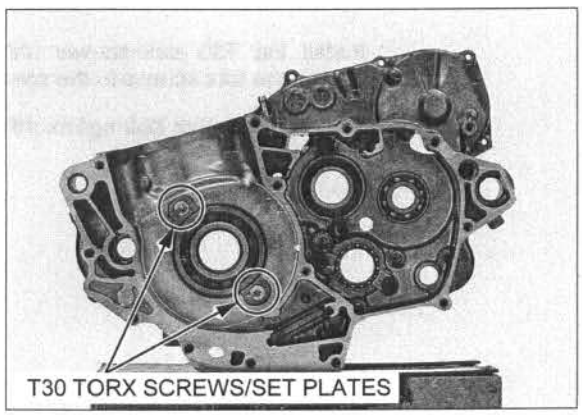

Remove the crankshaft oil seals and bearings from both crankcase halves.

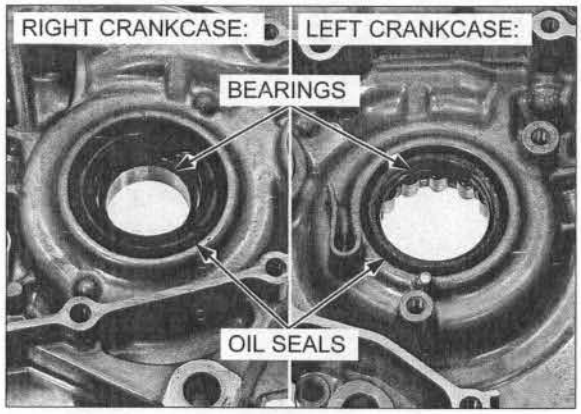

Drive in a new bearing squarely with the marking side facing toward the inside of the crankcase.

Drive in a new crankshaft bearings into both crankcase halves using the special tools.

TOOLS:

Right crankshaft bearing:	
Driver	**07749-0010000**
Attachment, 62 x 68 mm	**07746-0010500**
Pilot, 30 mm	**07746-0040700**
Left crankshaft bearing:	
Driver	**07749-0010000**
Attachment, 62 x 68 mm	**07746-0010500**

After installation, apply engine oil to the crankshaft bearings.

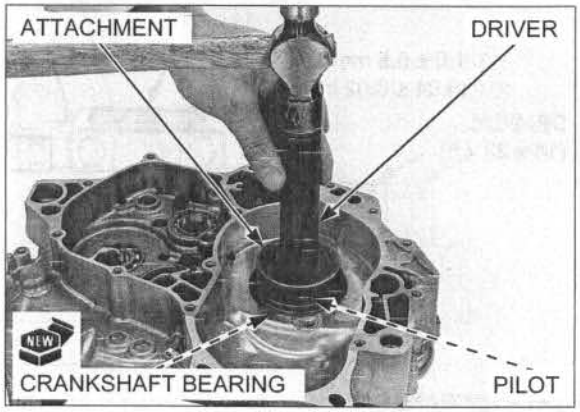

Clean and apply locking agent to the crankshaft bearing set plate torx screw threads as shown.

NOTE:
Use Pro Honda Hondalock 3 or equivalent high strength locking agent.

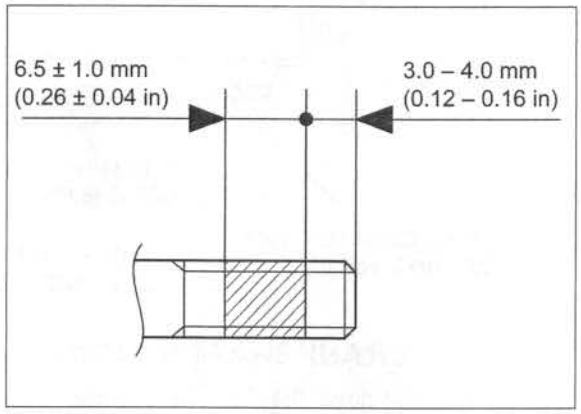

Install the T30 torx screws with the set plates and tighten the torx screws to the specified torque.

TORQUE: 22 N·m (2.2 kgf·m, 16 lbf·ft)

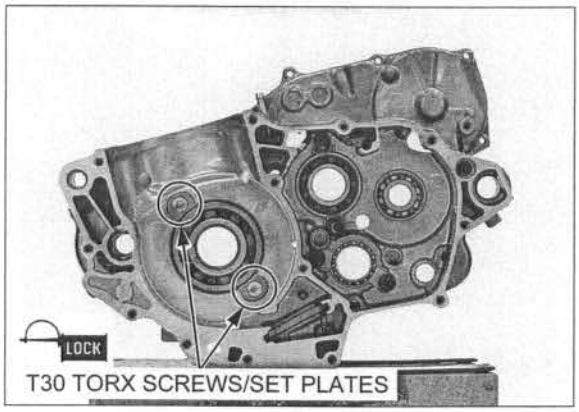

Apply grease to a new right crankshaft oil seal lips.

Install the right crankshaft oil seal with its metal side facing up.

Install the right crankshaft oil seal until it is flush with the crankcase surface.

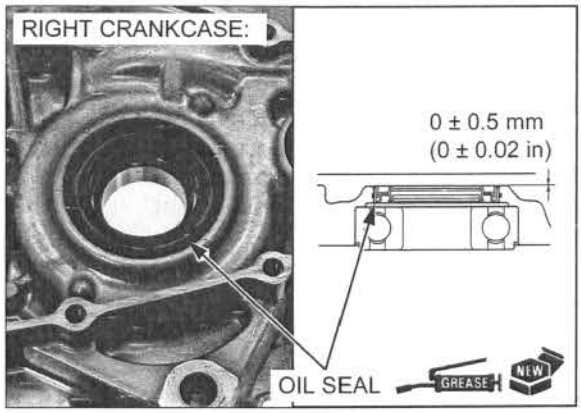

Apply grease to a new left crankshaft oil seal lips.

Install the left crankshaft oil seal with its flat side facing up.

Install the left crankshaft oil seal to the specified depth below the crankcase surface as shown.

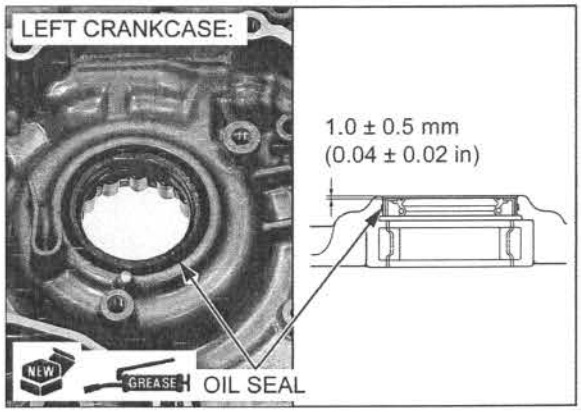

TRANSMISSION/BALANCER/OIL PUMP/GEARSHIFT DRUM BEARINGS

LEFT CRANKCASE

Remove the countershaft oil seal.

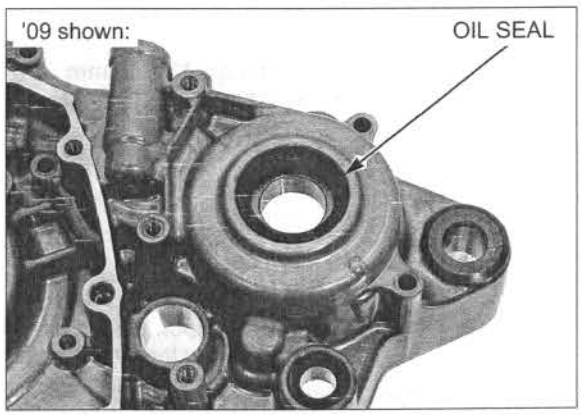

Remove the balancer shaft bearing using the special tools.

TOOLS:

Balancer shaft bearing:

Bearing remover set, 20 mm	**07936-3710600**
Remover handle	**07936-3710100**
Remover weight	**07741-0010201 or 07936-371020A (U.S.A. only)**

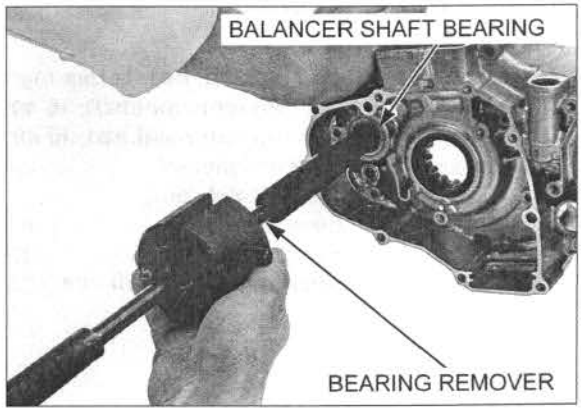

Remove the mainshaft bearing and balancer shaft bearing using the special tools.

TOOLS:
Mainshaft bearing:

Bearing remover set, 17 mm	**07936-3710300**
Remover handle	**07936-3710100**
Remover weight	**07741-0010201 or 07936-371020A (U.S.A. only)**

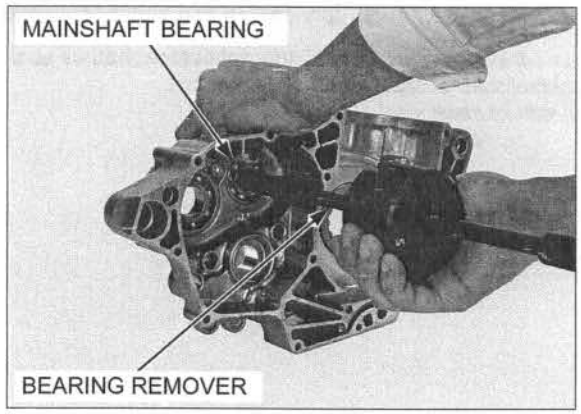

Remove the gearshift drum needle bearing.

Remove the T30 torx screws, set plates and countershaft bearing.

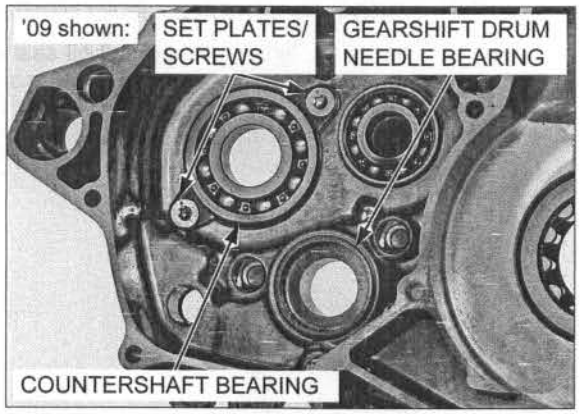

Drive in a new bearing squarely with the marked side facing up.

Drive in a new balancer shaft needle bearing using the special tools.

TOOLS:
Balancer shaft bearing:

Driver	**07749-0010000**
Attachment, 32 x 35 mm	**07746-0010100**
Pilot, 20 mm	**07746-0040500**

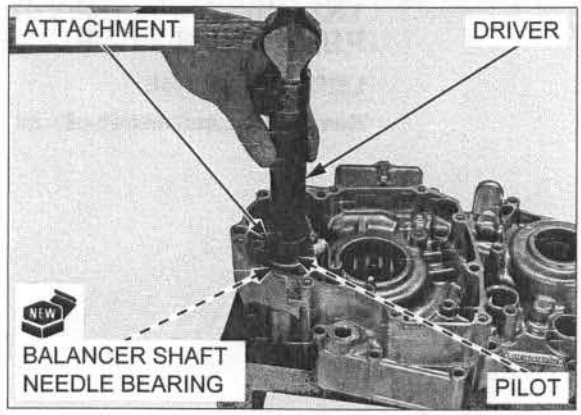

Remove the oil pump shaft needle bearing retainer and needles out from the bearing case.

When removing the oil pump shaft needle bearing cases, set the bearing remover head flange to the out side bearing case flange as shown.

Remove the oil pump shaft needle bearing cases using the spacial tools.

TOOLS:
Oil pump shaft needle bearing:

Bearing remover shaft, 10 mm	**07936-GE00100**
Bearing remover head, 10 mm	**07936-GE00200**
Remover weight	**07741-0010201**

TOOLS, U.S.A. only:

Remover handle	**07936-3710100**
Remover weight	**07936-371020A**
Bearing remover, 10 mm	**07936-GE0A000**

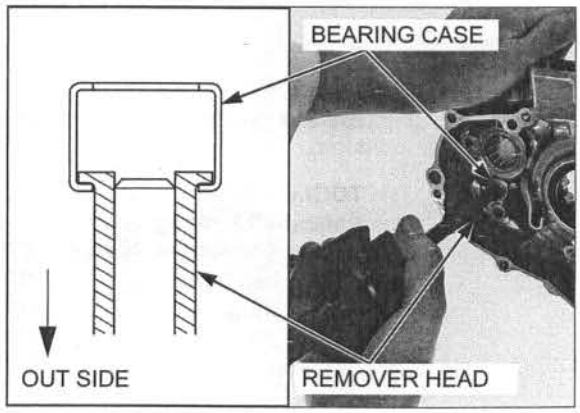

Drive in new bearings squarely with the marked side facing up.

Drive in new oil pump shaft needle bearings using the special tool to the specified depth below the crankcase boss as shown.

TOOLS:
Oil pump shaft needle bearing:

Valve guide driver, 8.0 mm	**07ZMD-MCH0100 or 07ZMD-MCHA100 (U.S.A. only)**

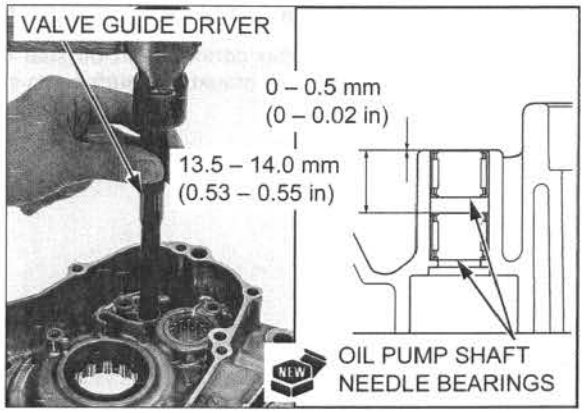

Drive in a new bearing squarely with the sealed side facing down.

Drive in a new mainshaft bearing using the special tools.

TOOLS:
Mainshaft bearing:

Driver	**07749-0010000**
Attachment, 37 x 40 mm	**07746-0010200**
Pilot, 17 mm	**07746-0040400**

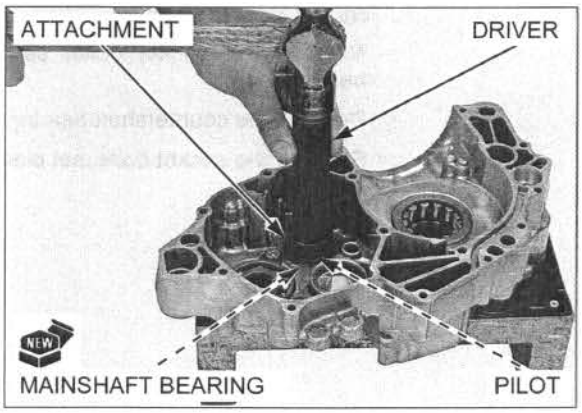

Drive in a new bearing squarely with the marked side facing up.

Drive in a new gearshift drum needle bearing using the special tools.

TOOLS:
Gearshift drum needle bearing:

Driver	**07749-0010000**
Attachment, 37 x 40 mm	**07746-0010200**

Drive in a new bearing squarely with the marked side facing down.

Drive in a new countershaft bearing using the special tools.

TOOLS:
Countershaft bearing:

Driver	**07749-0010000**
Attachment, 52 x 55 mm	**07746-0010400**

After installation, apply engine oil to each bearing.

Clean and apply locking agent to the countershaft bearing set plate torx screw threads (page 1-13).

Install the T30 torx screws with the set plates and tighten the screws to the specified torque.

TORQUE: 12 N·m (1.2 kgf·m, 9 lbf·ft)

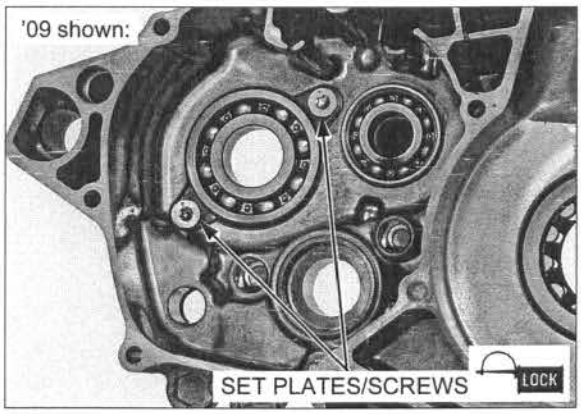

Apply grease to new countershaft oil seal lips.

Install the countershaft oil seal to the specified depth below the crankcase surface as shown.

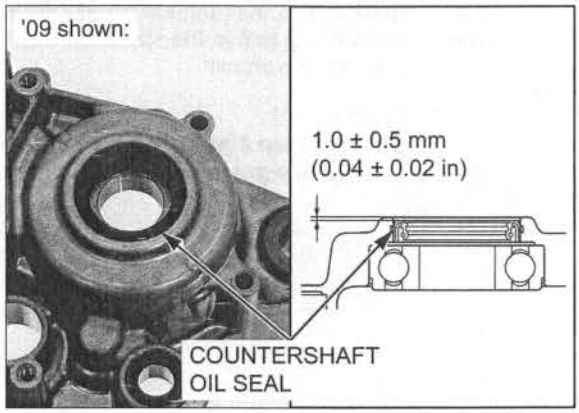

RIGHT CRANKCASE

Remove the socket bolts, set plate and mainshaft bearing.

Remove the countershaft bearing.

Remove the socket bolts, set plates and gearshift drum bearing.

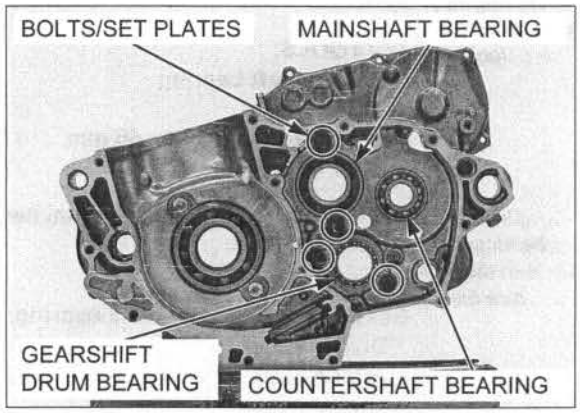

Remove the oil seal.

Remove the snap ring and balancer shaft bearing.

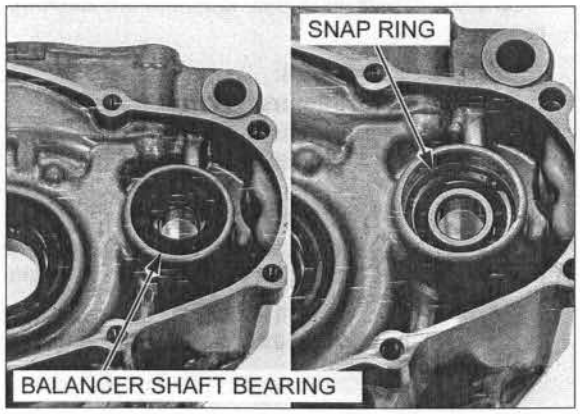

Drive in new bearings squarely with the sealed side facing down.

Drive in new mainshaft and countershaft bearings into the right crankcase using the special tools.

TOOLS:

Mainshaft bearing:	
Driver	**07749-0010000**
Attachment, 52 x 55 mm	**07746-0010400**
Pilot, 25 mm	**07746-0040600**
Countershaft bearing:	
Driver	**07749-0010000**
Attachment, 37 x 40 mm	**07746-0010200**
Pilot, 17 mm	**07746-0040400**

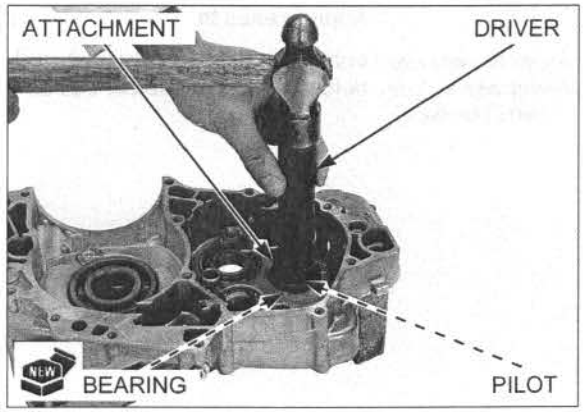

Drive in new bearings squarely with the marked side facing up.

Drive in new balancer shaft bearing into the right crankcase using the special tools.

TOOLS:

Balancer shaft bearing:	
Driver	**07749-0010000**
Attachment, 32 x 35 mm	**07746-0010100**
Pilot, 15 mm	**07746-0040300**

After installation, apply engine oil to each bearing.

Install a new gearshift drum bearing into the right crankcase with its sealed side facing down.

After installation, apply engine oil to gearshift drum bearing.

Clean and apply locking agent to each set plate bolt threads.

Install the socket bolts with the set plates, and tighten the bolts to the specified torque.

TORQUE:

Gearshift drum bearing set plate bolts:
12 N·m (1.2 kgf·m, 9 lbf·ft)
Mainshaft bearing set plate bolts:
12 N·m (1.2 kgf·m, 9 lbf·ft)

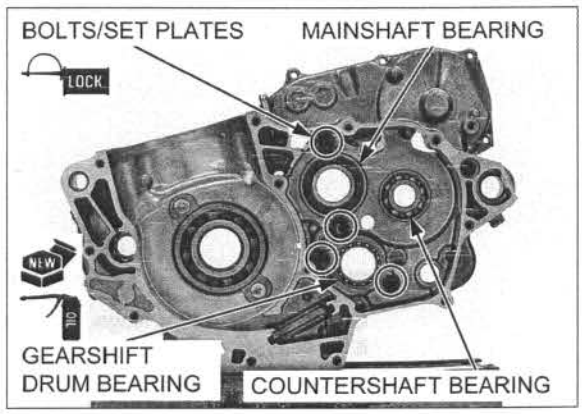

Make sure the snap ring is firmly seated in the groove.

Install the snap ring into the groove of the right crankcase securely.

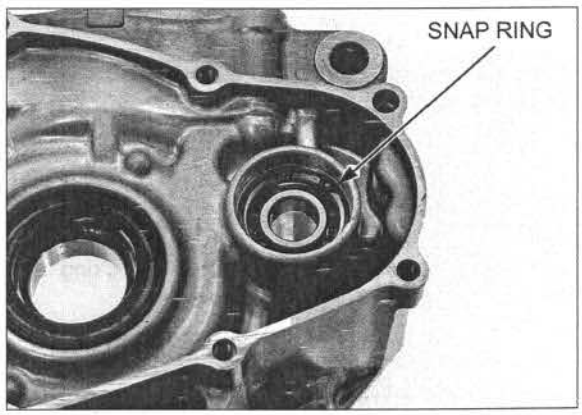

Apply grease to new balancer shaft oil seal lips.

Install the balancer shaft oil seal with its metal side facing up.

Install the balancer shaft oil seal to the specified depth below the crankcase surface as shown.

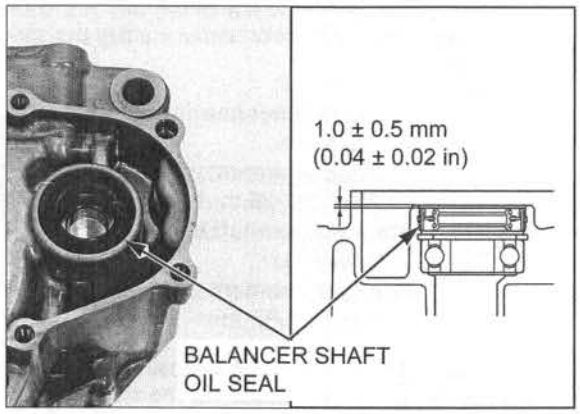

OIL JET

Remove the following:

- Transmission (page 13-15)
- Crankshaft (page 13-21)

Remove the bolt and oil jet.

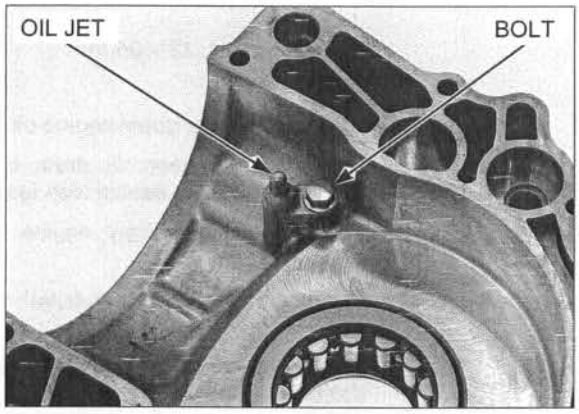

Blow the oil passage in the oil jet with compressed air.

Check the oil jet for clogs, wear or damage and replace it if necessary.

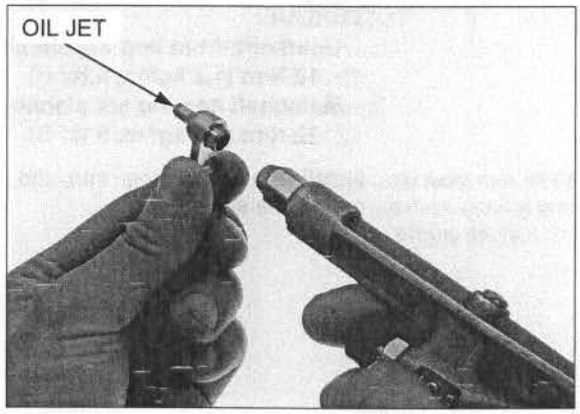

Clean and apply a locking agent to the oil jet bolt threads as shown.

Install the oil jet and tighten the bolt to the specified torque.

TORQUE: 10 N·m (1.0 kgf·m, 7 lbf·ft)

Install the following:

- Crankshaft (page 13-22)
- Transmission (page 13-20)

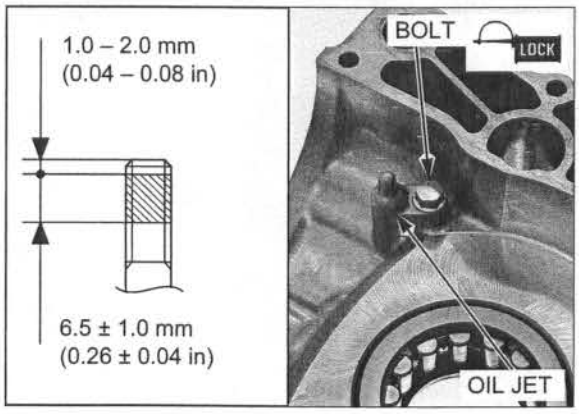

14. FRONT WHEEL/SUSPENSION/STEERING

COMPONENT LOCATION

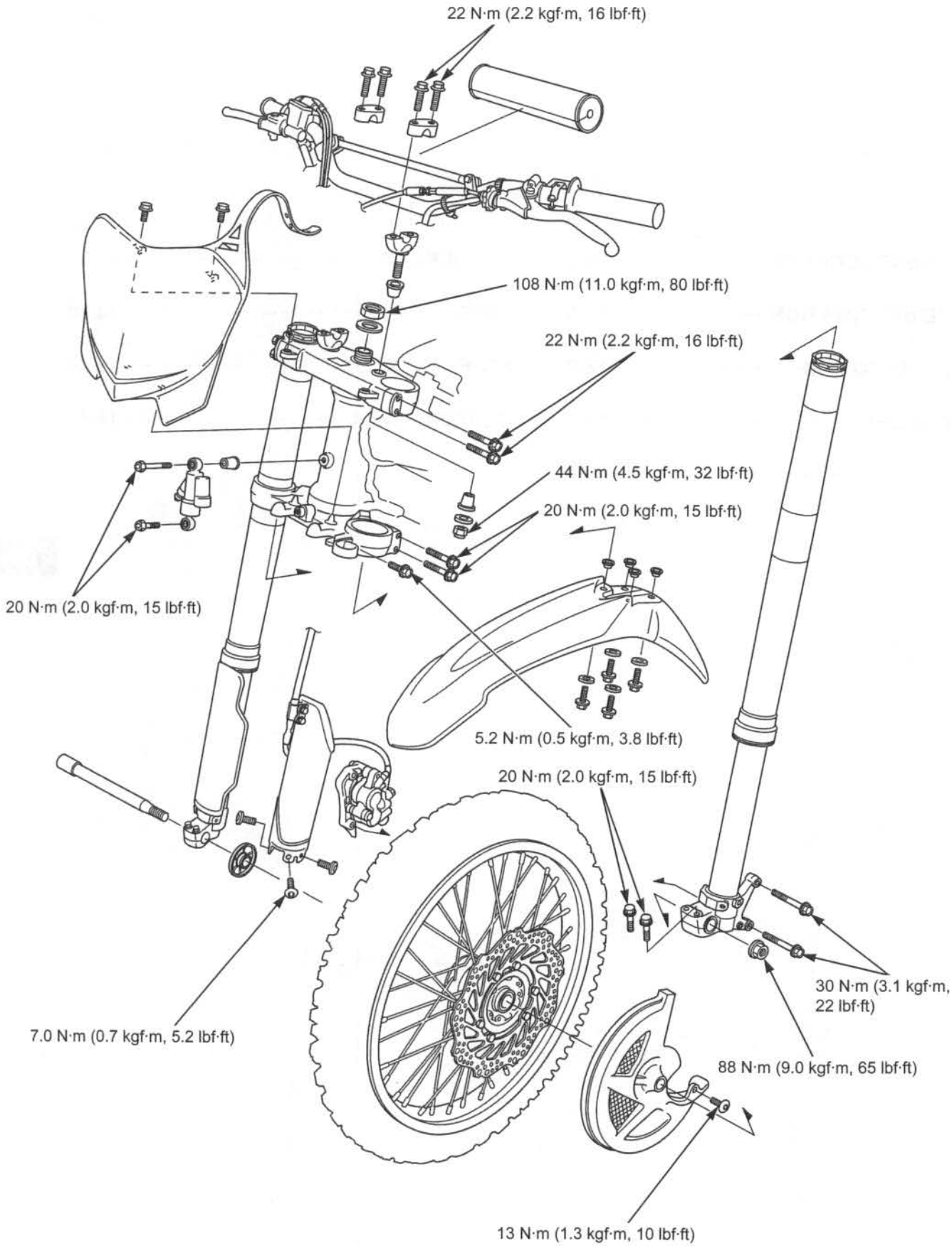

SERVICE INFORMATION

GENERAL

- Keep grease off the brake pads and disc.
- A contaminated brake disc or pad reduces stopping power. Discard contaminated pads and clean a contaminated disc with a high quality brake degreasing agent.
- When servicing the front wheel, fork or steering stem, support the motorcycle using a safety stand or hoist.
- After front wheel installation, check the brake operation by applying the brake lever.
- For the brake system information (page 16-4).
- When using the lock nut wrench, use a 20-inches long deflecting beam type torque wrench. The lock nut wrench increases the torque wrench's leverage, so the torque wrench reading will be less than the torque actually applied to the fork damper. The specification given on this page is actual torque applied to the fork damper, not the reading on the torque wrench when used with the lock nut wrench. The procedure later in the text gives the actual and indicated torque.
- After the front wheel installation, check the brake operation by applying the brake lever.

SPECIFICATIONS

Unit: mm (in)

ITEM				STANDARD	SERVICE LIMIT
Cold tire pressure				100 kPa (1.0 kgf/cm^2, 15 psi)	–
Axle shaft runout				–	0.2 (0.01)
Wheel rim runout	Radial			–	2.0 (0.08)
	Axial			–	2.0 (0.08)
Wheel hub-to-rim distance				See page 14-11	–
Fork	Spring free length			458 – 462 (18.0 – 18.2)	451 (17.8)
	Fork slider runout			–	0.2 (0.01)
	Recommended fork oil	KYB		KHL15-11	–
	Oil level			42 – 47 mm (1.65 – 1.85 mm)	–
	Oil capacity	Fork tube	'09	350 cm^3 (11.8 US oz, 12.3 Imp oz)	–
			After '09	355 cm^3 (12.0 US oz, 12.5 Imp oz)	–
		Fork damper		201 cm^3 (6.8 US oz, 7.1 Imp oz)	–
Compression damping adjuster standard position				13 clicks out from full in	–
Rebound damping adjuster standard position				8 clicks out from full in	–
HPSD	Recommended damper oil			Pro-Honda HP Fork Oil 5W or equivalent	–
	Free piston depth at 20°C (68°F)			27.3 – 27.9 (1.07 – 1.10)	–
	Damping force adjuster standard position			11 clicks out from full in	–

TORQUE VALUES

Axle holder bolt	20 N·m (2.0 kgf·m, 15 lbf·ft)	
Front axle nut	88 N·m (9.0 kgf·m, 65 lbf·ft)	
Front brake disc nut	16 N·m (1.6 kgf·m, 12 lbf·ft)	U-nut
Throttle cable bolt	4.0 N·m (0.4 kgf·m, 3.0 lbf·ft)	
Front master cylinder holder bolt	9.9 N·m (1.0 kgf·m, 7.3 lbf·ft)	
Clutch lever pivot bolt	See page 14-53	Apply grease to the sliding surface.
Clutch lever pivot nut	10 N·m (1.0 kgf·m, 7 lbf·ft)	U-nut
Engine stop switch screw	1.5 N·m (0.2 kgf·m, 1.1 lbf·ft)	
Front brake caliper mounting bolt	30 N·m (3.1 kgf·m, 22 lbf·ft)	Apply locking agent to the threads.
Fork cap	28 N·m (2.9 kgf·m, 21 lbf·ft)	
Fork center bolt	55 N·m (5.6 kgf·m, 41 lbf·ft)	Apply locking agent to the threads.
Fork center bolt lock nut	29 N·m (3.0 kgf·m, 21 lbf·ft)	
Plug bolt	1.2 N·m (0.1 kgf·m, 0.9 lbf·ft)	
Fork damper	30 N·m (3.1 kgf·m, 22 lbf·ft)	
Fork protector mounting bolt	7.0 N·m (0.7 kgf·m, 5.2 lbf·ft)	Apply locking agent to the threads.
Front brake disc cover bolt	13 N·m (1.3 kgf·m, 10 lbf·ft)	
Fork top bridge pinch bolt	22 N·m (2.2 kgf·m, 16 lbf·ft)	
Fork bottom bridge pinch bolt	20 N·m (2.0 kgf·m, 15 lbf·ft)	
Handlebar upper holder bolt	22 N·m (2.2 kgf·m, 16 lbf·ft)	
Handlebar lower holder nut	44 N·m (4.5 kgf·m, 32 lbf·ft)	U-nut
Steering damper mounting bolt	20 N·m (2.0 kgf·m, 15 lbf·ft)	Apply locking agent to the threads.
Steering stem nut	108 N·m (11.0 kgf·m, 80 lbf·ft)	
Steering stem adjusting nut	See page 14-51	
Front brake hose guide bolt	5.2 N·m (0.5 kgf·m, 3.8 lbf·ft)	

TOOLS

Steering stem socket 07916-3710101 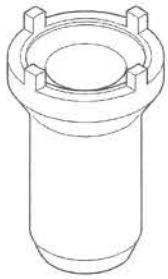 or 07702-0020001 (U.S.A. only)	Ball race remover 07YAC-0010102 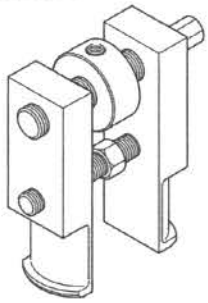	Fork seal driver, 48.2 x 58 mm 070MD-MEN0100  or 070MD-MENA100 (U.S.A. only)
Driver 07749-0010000 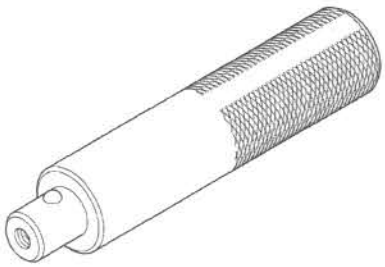	Base collar, 31 mm I.D. 07GAJ-PG20120 	Attachment, 37 x 40 mm 07746-0010200 
Pilot, 20 mm 07746-0040500 	Bearing remover head, 20 mm 07746-0050600 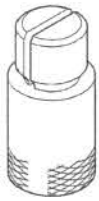	Bearing remover shaft 07GGD-0010100 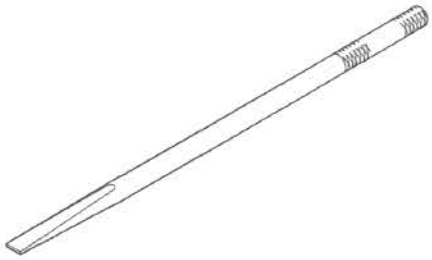
Piston base 07958-2500001 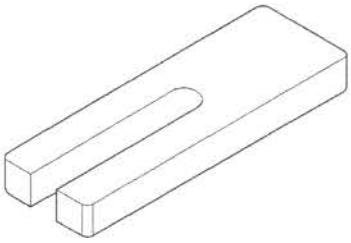	Bearing race installer (2 required) 070MF-MEN0100 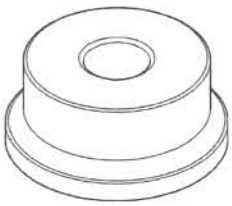 or 070MF-MENA100 (U.S.A. only)	Installer shaft 07VMF-KZ30200 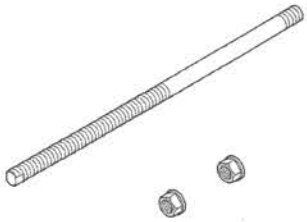

Lock nut wrench, 49 mm 070MA-MEN0100 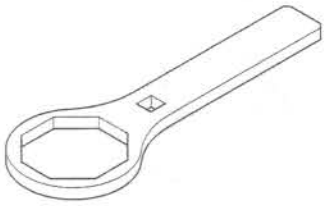 or 070MA-MENA100 (U.S.A. only)	Fork rod stopper 07AMB-KZ3A100 (U.S.A. only) 	Collar 07KPF-VD60100 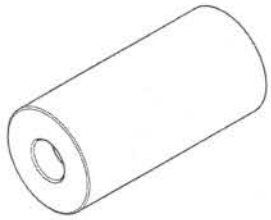
Depth gauge 07AMJ-MENA100 (U.S.A. only) 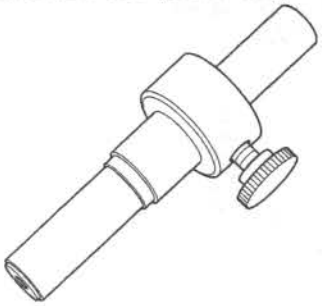	Fork cap bolt holder, 36 mm 070MB-MEN0100 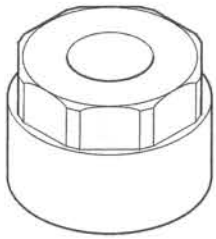 or 070MB-MENA100 (U.S.A. only)	Spherical bearing remover 07AMD-MENA100 (U.S.A. only) 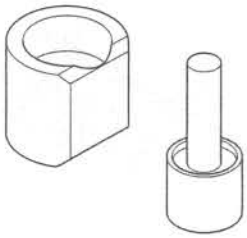
Remover weight 07741-0010201 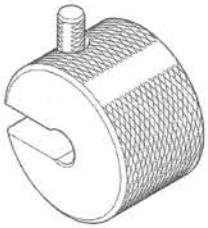 or 07936-371020A (U.S.A. only)	Ball race remover shaft 07JAC-PH80200 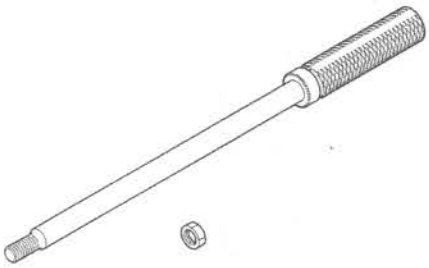 Not available in U.S.A.	Adapter, 3/8 x 16 in 07YAC-001A200 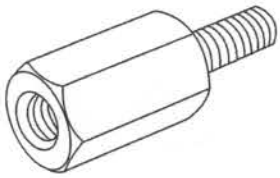

TROUBLESHOOTING

Hard steering
- Steering stem adjusting nut too tight
- Faulty or damaged steering head bearings/races
- Insufficient tire pressure
- Faulty tire
- Faulty HPSD

Steers to one side or does not track straight
- Bent fork tube
- Bent axle shaft
- Wheel installed incorrectly
- Unequal fork oil quantity in each fork tube
- Faulty steering head bearings
- Bent frame
- Worn wheel bearings
- Worn swingarm pivot components
- Unevenly adjusted right and left fork legs

Front wheel wobbling
- Bent rim
- Worn wheel bearings
- Bent spokes
- Faulty tire
- Insufficient tire pressure
- Axle not tightened properly
- Unbalanced tire and wheel

Wheel hard to turn
- Faulty wheel bearings
- Bent axle shaft
- Brake drag (page 16-6)

Soft suspension
- Weak fork springs
- Insufficient fork oil in fork
- Incorrect fork oil weight
- Insufficient tire pressure

Stiff suspension
- Fork oil quantity too much
- Fork oil viscosity too thick
- Bent or damaged fork tubes
- Clogged fork oil passage

Front suspension noise
- Insufficient fork oil in fork
- Loose fork fasteners

FRONT WHEEL

REMOVAL

Raise the front wheel off the ground by placing a workstand or equivalent under the engine.

Remove the brake disc cover bolt.

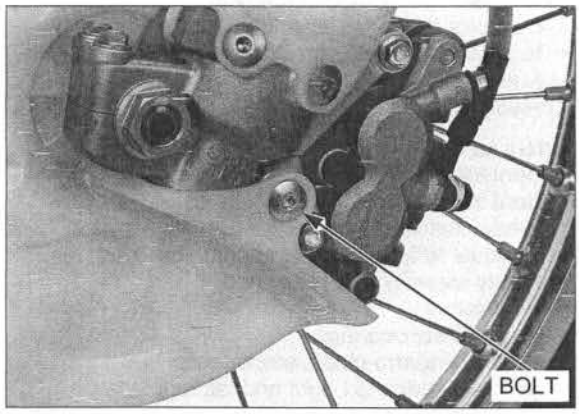

Remove the axle nut, and loosen the left axle holder bolts.

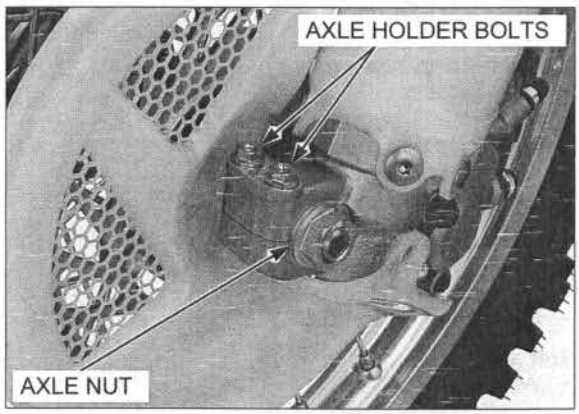

Do not operate the brake lever after removing the front wheel.

Loosen the right axle holder bolts.
Remove the axle shaft and front wheel.

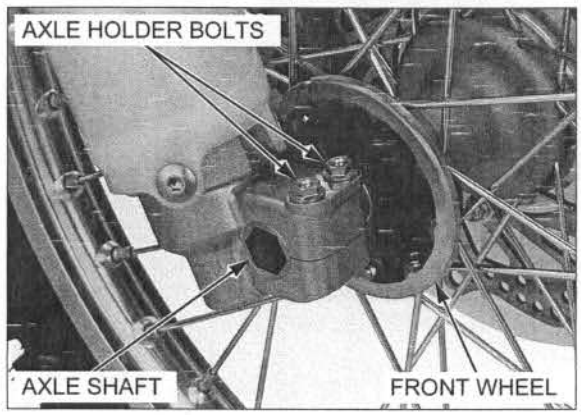

INSPECTION

AXLE SHAFT RUNOUT

Set the axle shaft on V-blocks and measure the runout. Turn the axle shaft, and measure the runout using a dial indicator.

Actual runout is 1/2 of the total indicator reading.

SERVICE LIMIT: 0.2 mm (0.01 in)

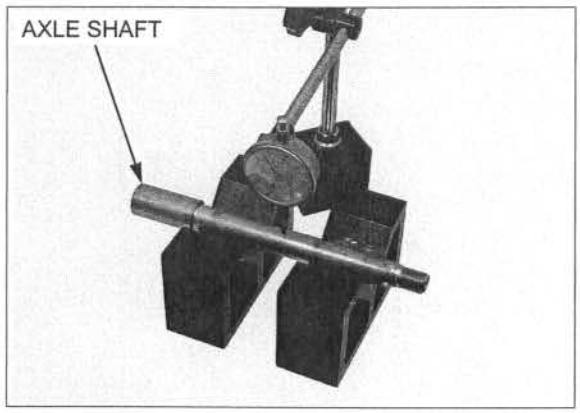

WHEEL BEARING

Turn the inner race of each wheel bearing with your finger.
The bearings should turn smoothly and quietly.
Also check that the bearing outer race fits tightly in the wheel hub.

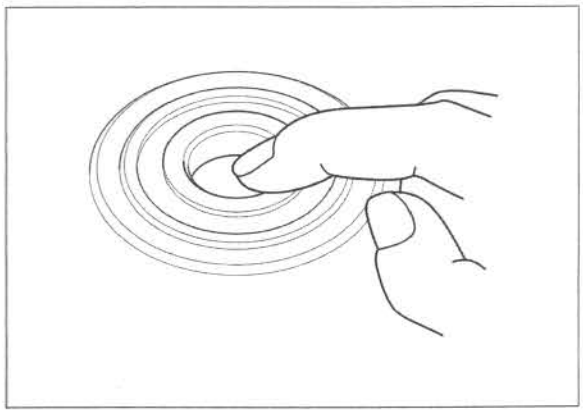

Replace the bearings in pairs.

Replace the wheel bearing, if necessary (page 14-9).

WHEEL RIM RUNOUT

Check the rim runout by placing the wheel on a truing stand.
Spin the wheel by hand, and read the runout using a dial indicator.

Actual runout is 1/2 the total indicator reading.

SERVICE LIMITS:
Radial: 2.0 mm (0.08 in)
Axial: 2.0 mm (0.08 in)

Check the spokes and tighten any that are loose.

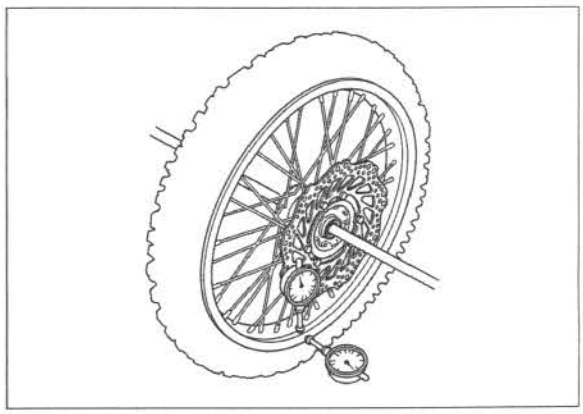

DISASSEMBLY

Remove the brake disc cover from the left wheel hub.

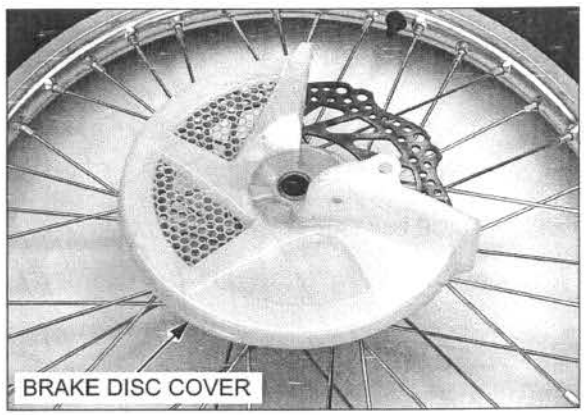

Remove the side collar and dust seal from the right wheel hub.

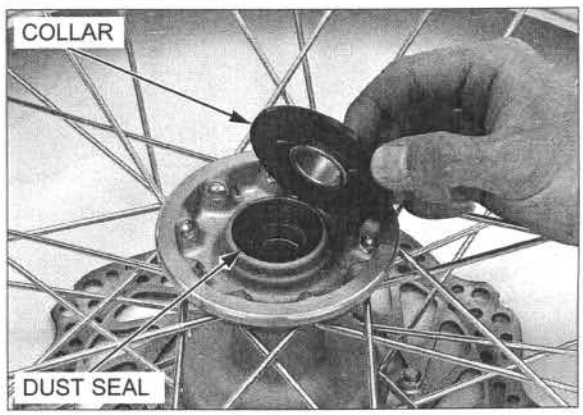

Remove the following:

- Brake disc bolts and nuts
- Brake disc
- Dust seal

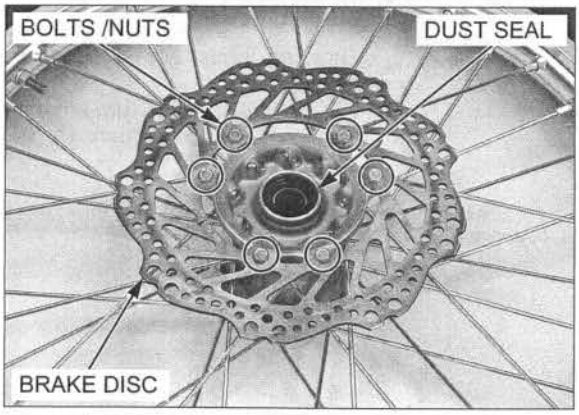

Replace the wheel bearings in pairs. Do not reuse old bearings.

Install the remover head into the wheel bearing. From the opposite side, install the remover shaft, and drive the wheel bearing out of the wheel hub. Remove the distance collar and drive out the other bearing.

TOOLS:

Bearing remover head, 20 mm	**07746-0050600**
Bearing remover shaft	**07GGD-0010100**

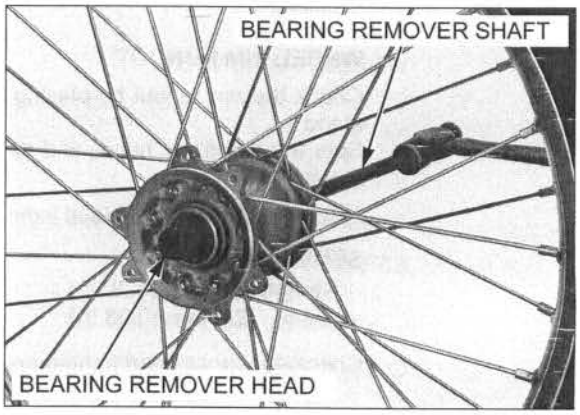

ASSEMBLY

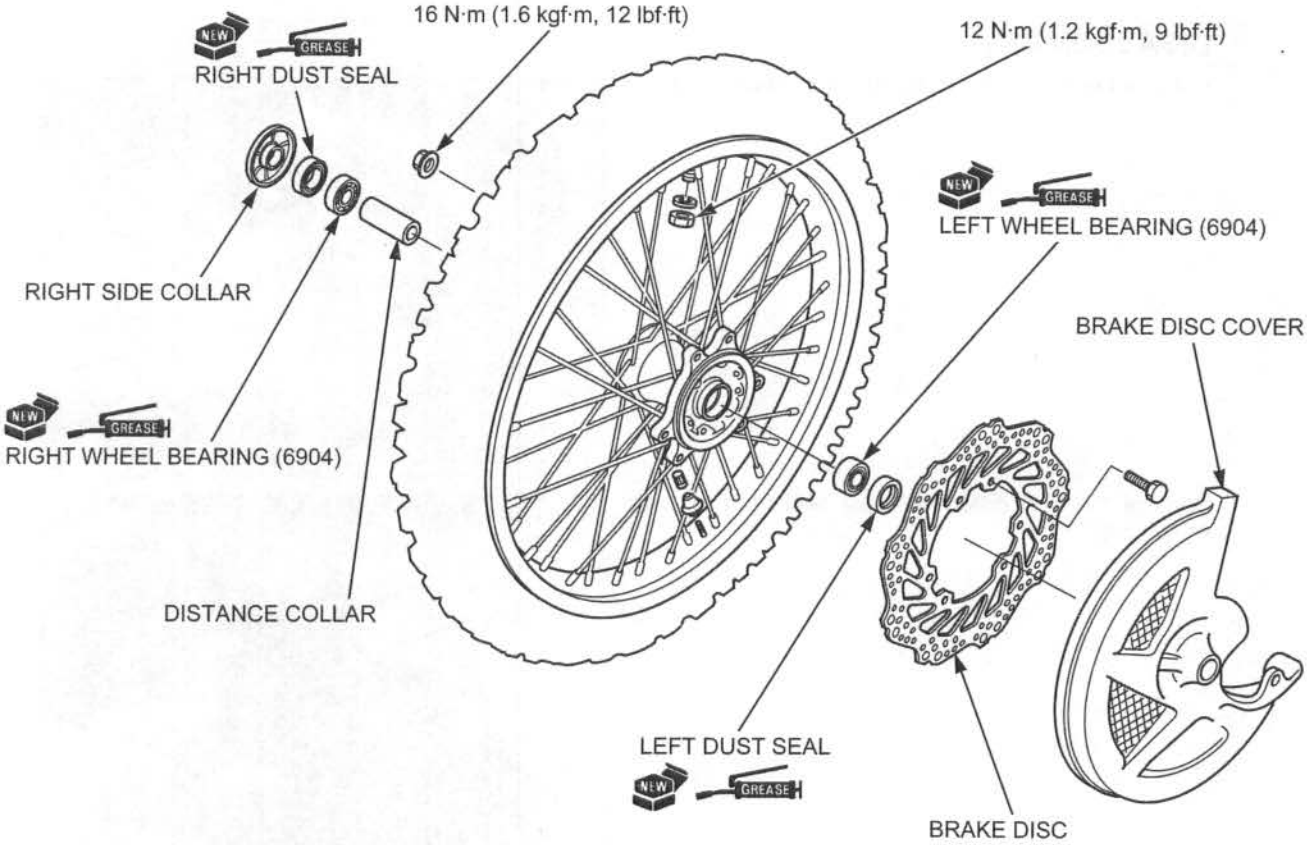

Place the rim on a work bench.
Place the hub in the center of the rim, and begin the lacing with new spokes.

Adjust the hub position so the distance from the hub left end surface to the side of the rim is
28.0 ± 1.0 mm (1.10 ± 0.04 in) as shown.

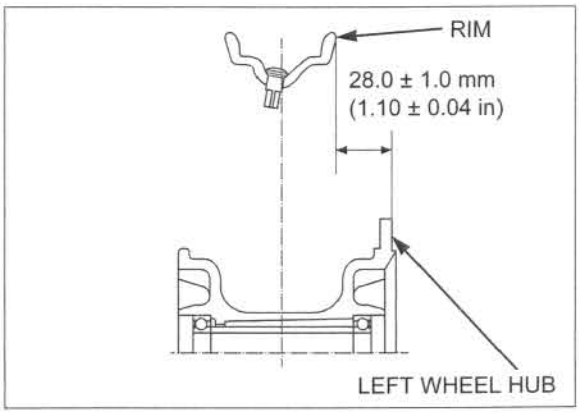

Tighten the spokes in two or three progressive steps (page 4-34).

Install the rim lock, setting rubber, tube and tire.

Tighten the rim lock (page 4-34).

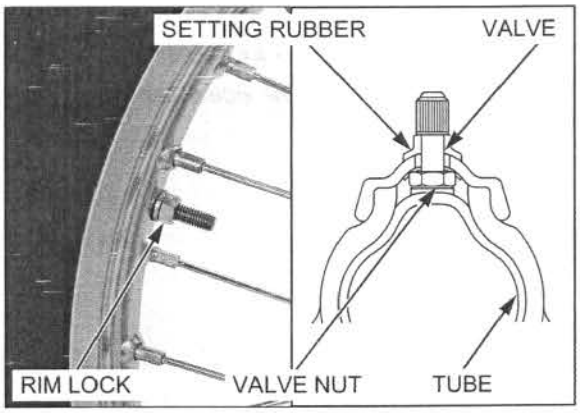

Pack each wheel bearing cavity with grease.

Replace the wheel bearings in pairs. Do not reuse old bearings.

Drive a new left wheel bearing in the wheel hub until it is fully seated using special tools.

- Install the wheel bearing with the sealed side toward the outside.

TOOLS:

Driver	**07749-0010000**
Attachment, 37 x 40 mm	**07746-0010200**
Pilot, 20 mm	**07746-0040500**

Install the distance collar into place, then drive a new right wheel bearing using the same special tools.

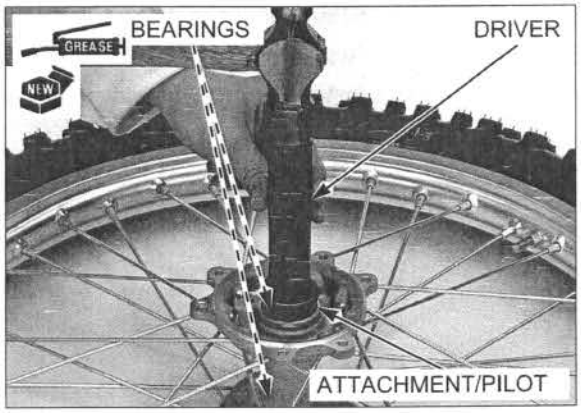

Pack the lips of a new right dust seal with grease, and install it to the wheel hub.

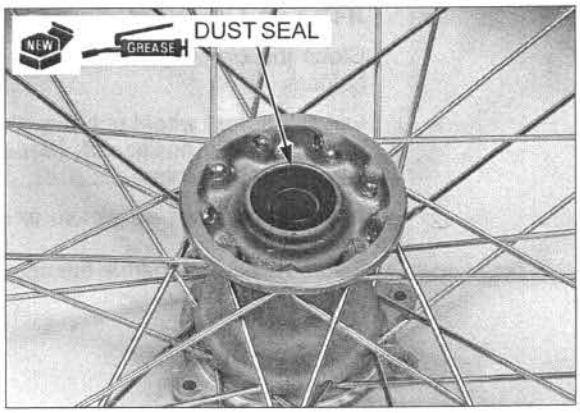

Pack the lips of a new left dust seal with grease, and install it to the wheel hub.

Do not get grease on the brake disc or stopping power will be reduced.

Install the brake disc onto the wheel hub with the "DRIVE" mark facing out.

Install the brake disc bolts and nuts.
Tighten the nuts to the specified torque.

TORQUE: 16 N·m (1.6 kgf·m, 12 lbf·ft)

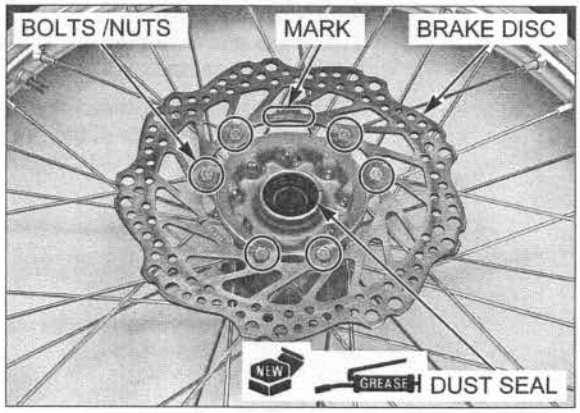

Check the left side collar for wear or damage.

Replace it if necessary.

Install the side collar to the right wheel hub.

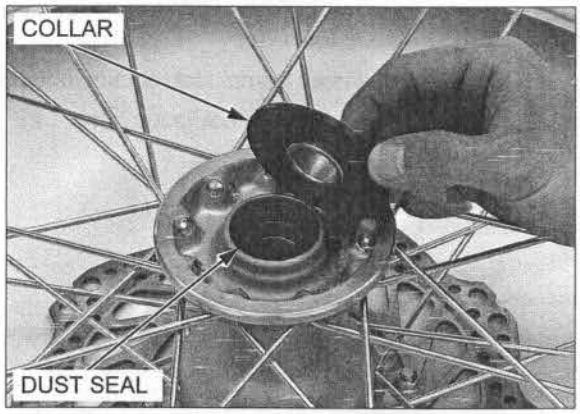

Check the brake disc cover for wear or damage.

Replace it if necessary.

Install the brake disc cover to the left wheel hub.

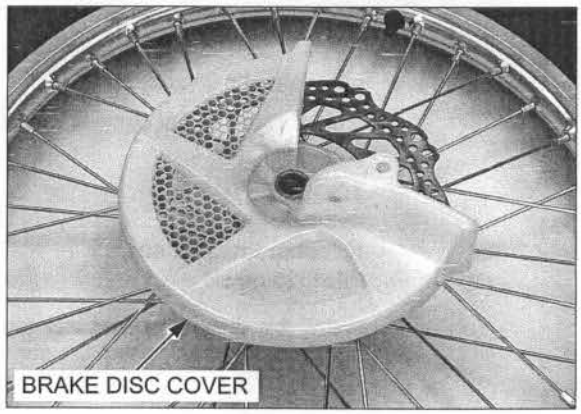

INSTALLATION

Clean the clamping surface of the axle shaft and axle holders.

Install the front wheel between the fork legs so that the brake disc is positioned between the pads, being careful not to damage the pads.

Apply a thin coat of grease to the axle shaft sliding surface.
Insert the axle shaft from the right side.

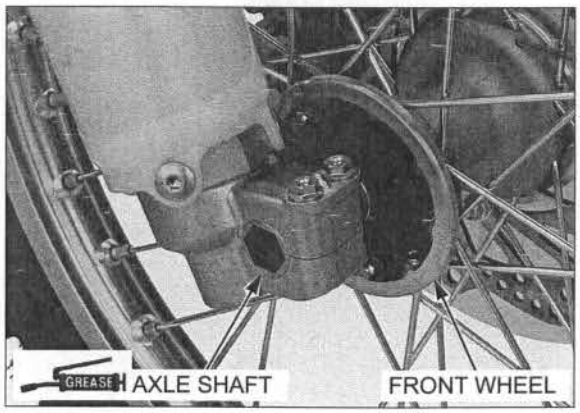

Install and tighten the axle nut to the specified torque while holding the axle shaft.

TORQUE: 88 N·m (9.0 kgf·m, 65 lbf·ft)

Tighten the left axle holder bolts to the specified torque.

TORQUE: 20 N·m (2.0 kgf·m, 15 lbf·ft)

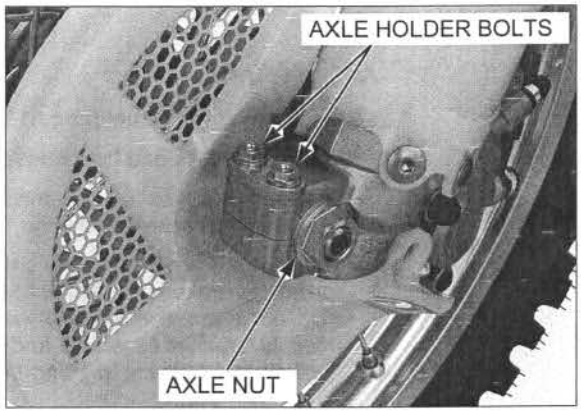

With the front brake applied, pump the front suspension up and down several times to seat the axle shaft and check the front brake operation.

Be sure the fork legs are parallel, then tighten the right axle holder bolts to the specified torque.

TORQUE: 20 N·m (2.0 kgf·m, 15 lbf·ft)

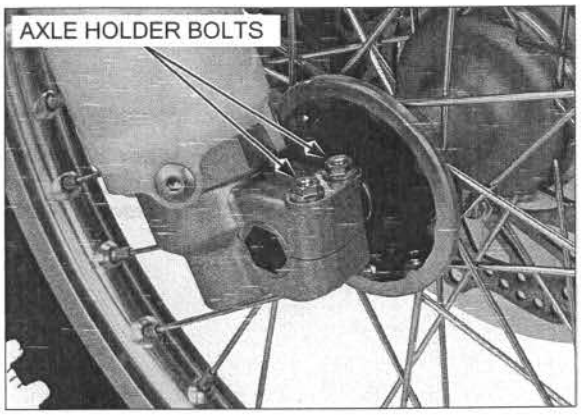

Install the brake disc cover bolt.
Tighten the bolt to the specified torque.

TORQUE: 13 N·m (1.3 kgf·m, 10 lbf·ft)

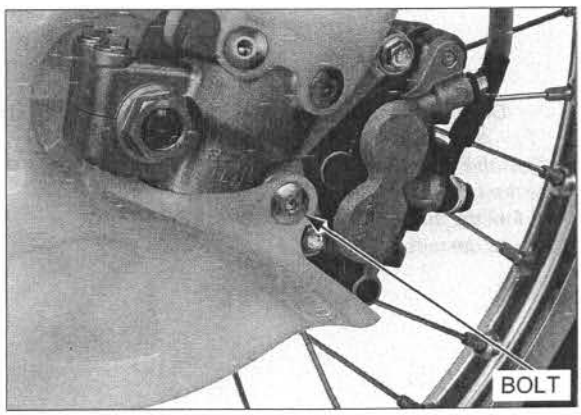

FORK

REMOVAL

Remove the front wheel (page 14-8).

Remove the bolts and brake hose clamp.

Remove the brake caliper mounting bolts and front brake caliper/bracket assembly.

- Do not suspend the brake caliper/bracket assembly from the brake hose. Do not twist the brake hose.
- Do not operate the brake lever after removing the caliper/bracket assembly and front wheel. To do so will cause difficulty in fitting the brake disc between the brake pad.

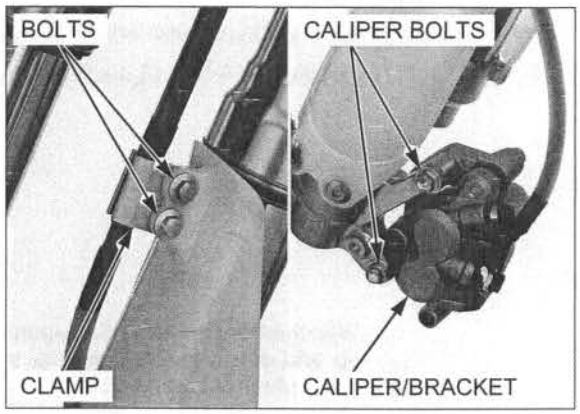

Remove the fork protector mounting bolts and fork protector.

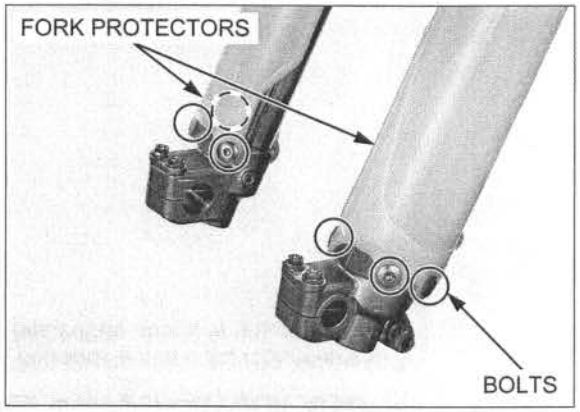

Loosen the fork top bridge pinch bolts.

When the fork is ready to be disassembled, remove the handlebar and holders (page 14-34) and loosen the fork damper using the following procedure.

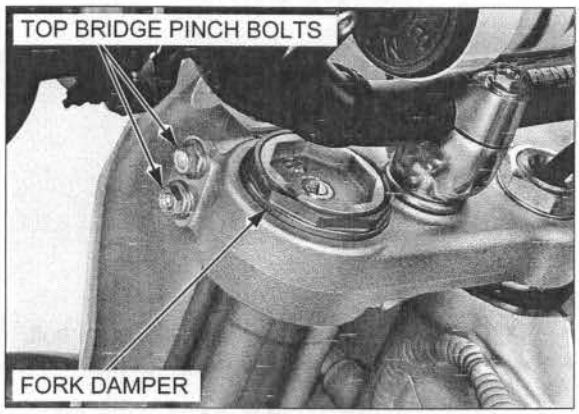

Do not use a crescent or adjustable wrench to the loosen the fork damper; it could be damaged.

Loosen the fork damper using the special tool, but do not remove it yet.

TOOL:

Lock nut wrench, 49 mm	**070MA-MEN0100 or 070MA-MENA100 (U.S.A. only)**

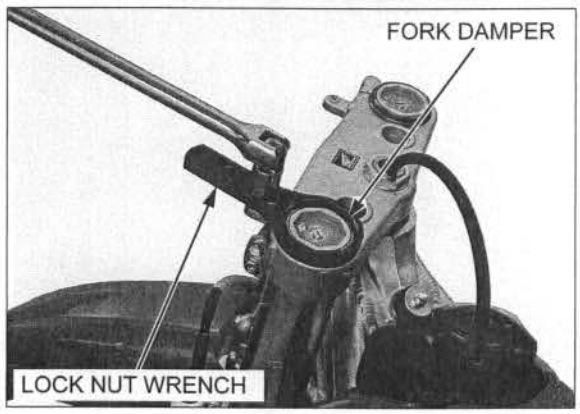

Loosen the fork bottom bridge pinch bolts, and pull the fork leg down and out.

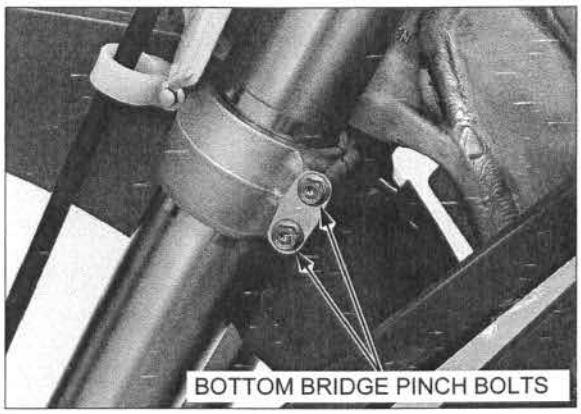

DISASSEMBLY

Be careful not to scratch the fork slider and not to damage the dust seal.

Clean the fork assembly, the sliding surface of the fork slider and bottom of the slider around the center bolt before disassembling the fork.

Measure the length between the axle holder and outer tube, and record it before disassembling the fork.

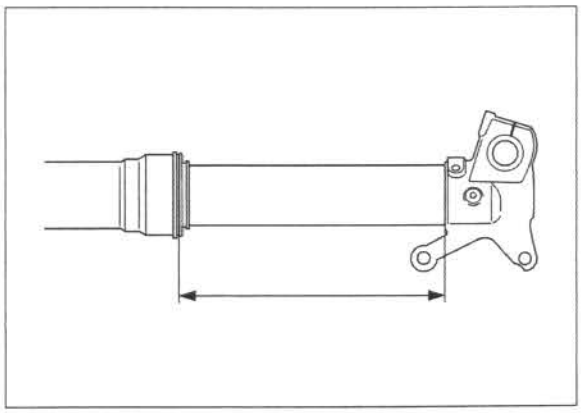

Turn the rebound and compression damping adjusters counterclockwise to the softest position needle (be sure to record the number of turns from the starting position).

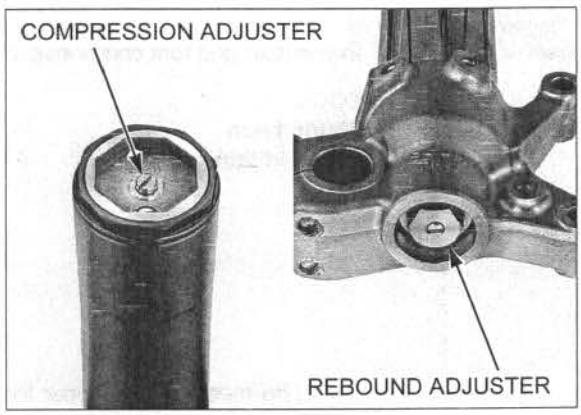

Hold the outer tube, and remove the fork damper using the special tool from the outer tube.

TOOL:

Lock nut wrench, 49 mm	**070MA-MEN0100 or 070MA-MENA100 (U.S.A. only)**

Slide the outer tube down onto the axle holder.

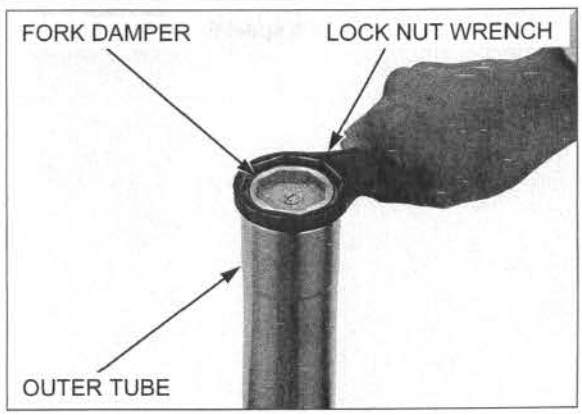

Drain the fork oil from the outer tube and oil holes of the fork damper.

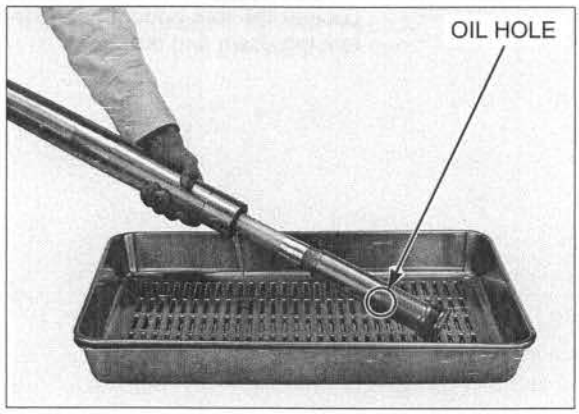

Do not over-tighten the vise on the axle holder.

Set the axle holder of the fork slider in a vise with a piece of wood or soft jaws to avoid damage.

Loosen the fork center bolt.

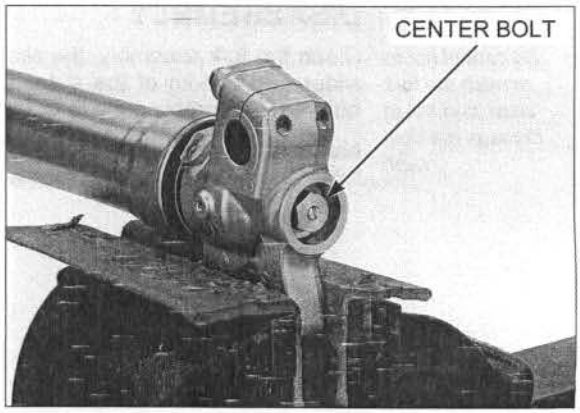

If a piston base is not available, refer to the next step to make an alternative tool.

Push the fork damper out from the slider until the fork center bolt lock nut is fully exposed, and install the piston base or mechanic's stopper tool between the axle holder and fork center bolt lock nut.

TOOL:

Piston base	**07958-2500001 or**
Fork rod stopper	**07AMB-KZ3A100**
	(U.S.A. only)

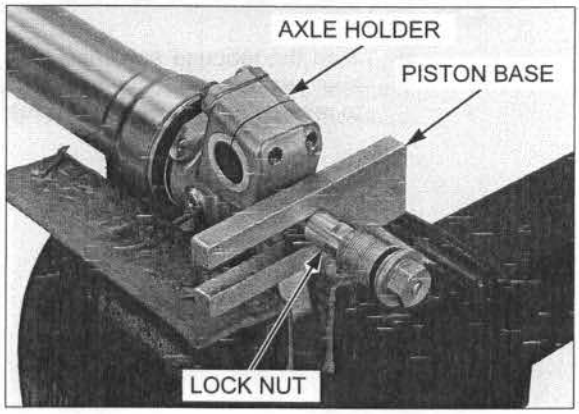

Make the mechanic's stopper tool from a thin piece of steel (2.0 mm (0.08 in) thick) as shown if you do not have a special tool.

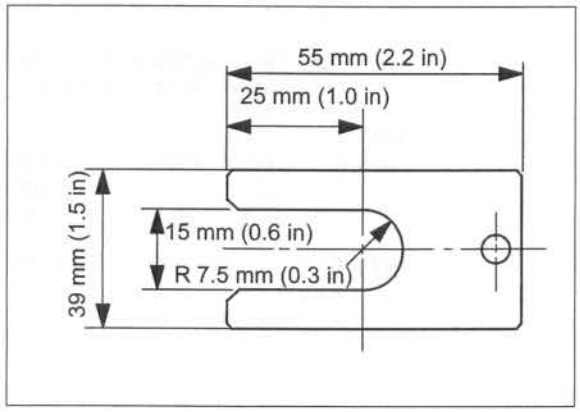

Hold the fork center bolt lock nut using the 15 mm (9/16 in) open end wrench, and remove the fork center bolt from the fork damper.

Remove the O-ring, sealing washer from the fork center bolt.

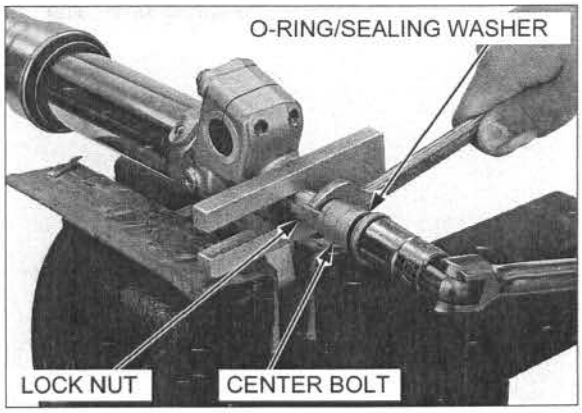

Remove the push rod from the piston rod.

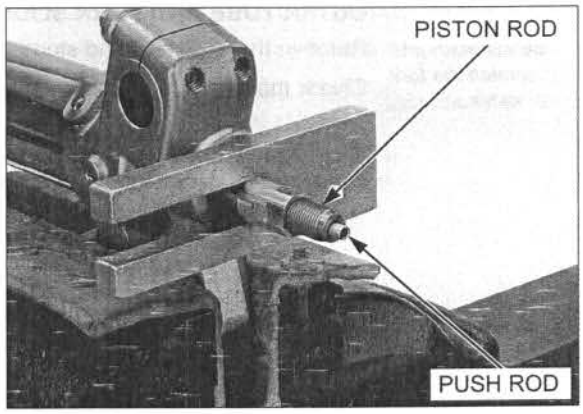

Be careful not to damage the fork center bolt lock nut and fork center bolt hole.

Remove the piston base or mechanic's stopper tool between the axle holder and fork center bolt lock nut while pushing the fork damper.

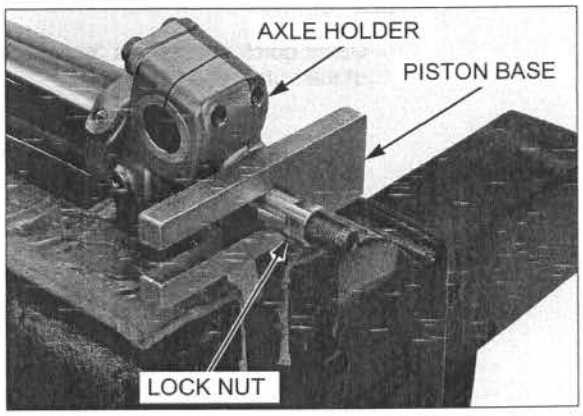

Remove the fork damper assembly from the fork assembly.
Remove the O-ring from the fork damper assembly.
Remove the fork assembly from the vise.
Remove the fork spring from the fork assembly.

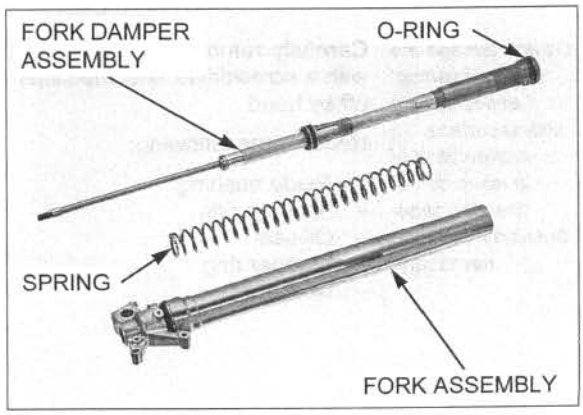

Remove the spring seat collar from the fork damper.

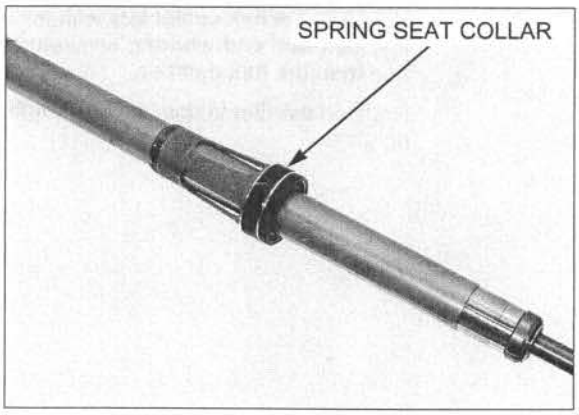

OUTER TUBE AND FORK SLIDER DISASSEMBLY

Be careful not to scratch the fork slider surface.

Remove the dust seal and stopper ring.

Check that the fork slider moves smoothly in the outer tube.

If it does not, check the fork slider for bends or damage, and slider bushings for wear or damage (page 14-20).

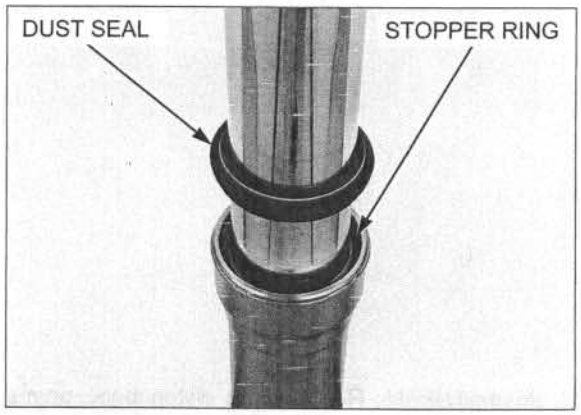

Using quick successive motions, pull the fork slider out of the outer tube.

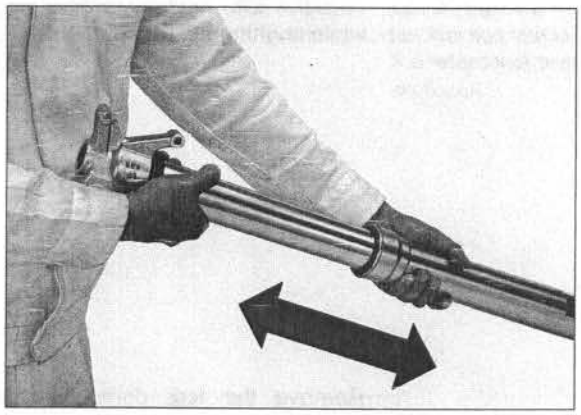

Do not damage the slider bushing, especially the sliding surface. To prevent loss of tension, do not open the slider bushing more than necessary.

Carefully remove the slider bushing by prying the slot with a screwdriver until the slider bushing can be pulled off by hand.

Remove the following:

- Guide bushing
- Back-up ring
- Oil seal
- Stopper ring
- Dust seal

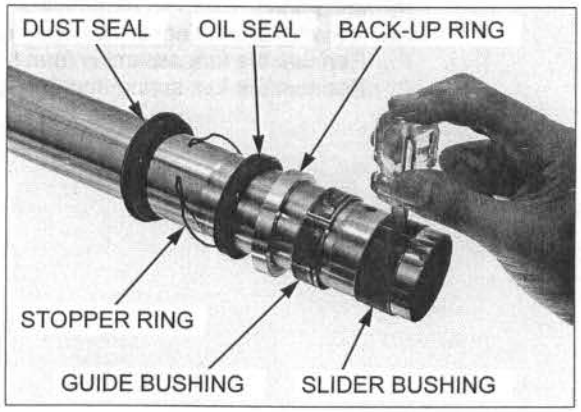

FORK DAMPER DISASSEMBLY

Set the fork damper in a vise with a piece of wood or soft jaws to avoid damage.

Hold the fork damper using the special tool.

TOOL:

Fork cap bolt holder, 36 mm	**070MB-MEN0100 or 070MB-MENA100 (U.S.A. only)**

Loosen the fork cap assembly using the special tool while holding the fork damper.

TOOL:

Lock nut wrench, 49 mm	**070MA-MEN0100 or 070MA-MENA100 (U.S.A. only)**

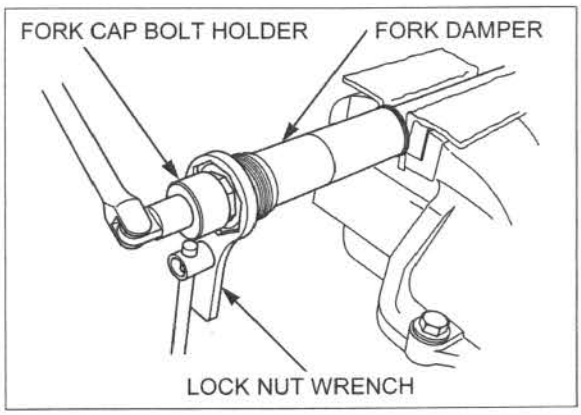

Remove the fork cap assembly from the fork damper while pumping the piston rod slowly.
Remove the O-rings from the fork cap assembly.

NOTE:
- Do not disassemble the fork cap assembly.
- Replace the fork cap as an assembly if it is damaged.
- Be careful not to damage the fork cap bushings.

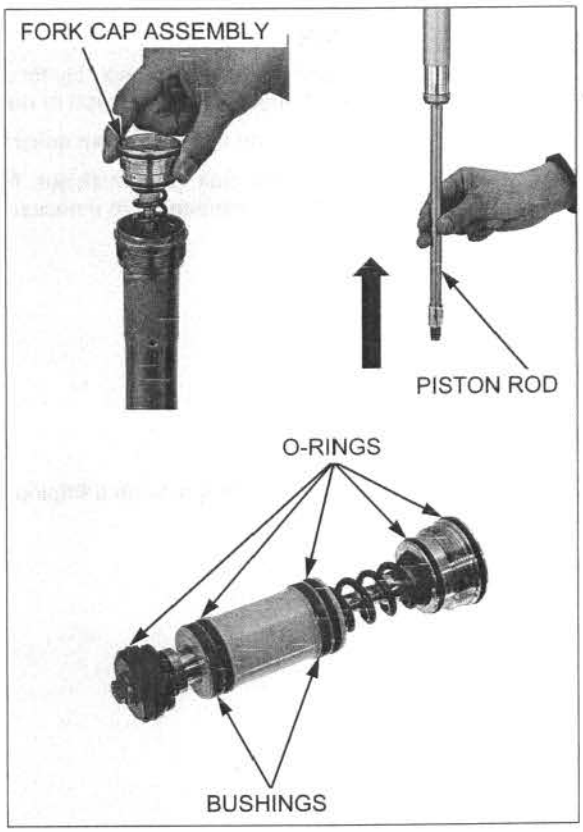

Empty the fork oil from the fork damper by pumping the damper rod several times.

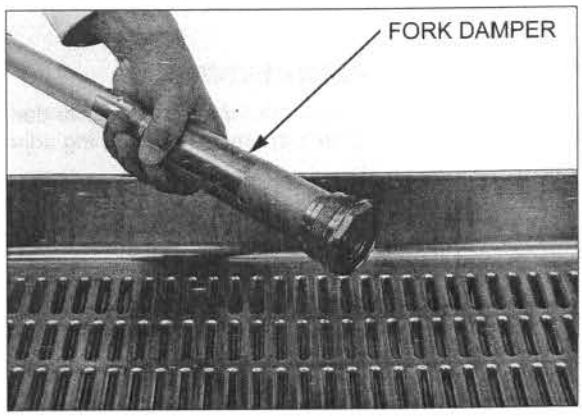

INSPECTION

SPRING SEAT COLLAR

Check the spring seat collar for wear or damage.
Check the bushing for excessive wear or scratches.

Replace the spring seat collar as an assembly if necessary.

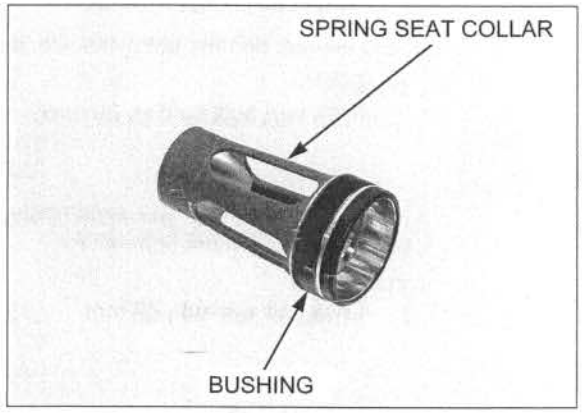

FORK CAP ASSEMBLY

Check the fork cap assembly for damage.
Check the spring for fatigue or damage.

Replace the fork cap as an assembly if necessary.

Check the fork cap bushings for excessive wear or scratches, replace them if necessary.

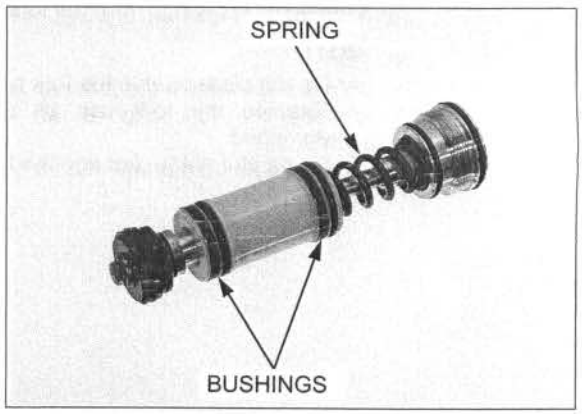

Check the compression damping adjuster for clicks.

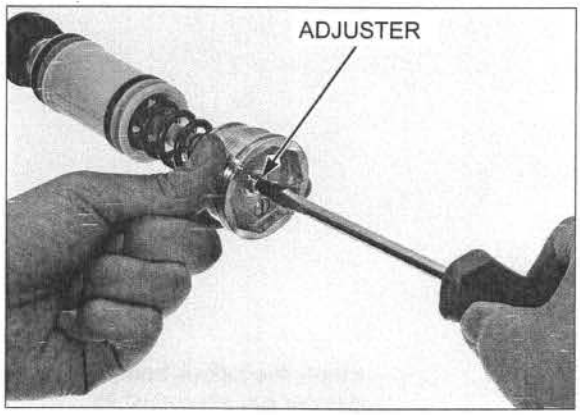

FORK CENTER BOLT

Check the fork center bolt for damage.
Check the rebound damping adjuster for clicks.

Replace the fork center bolt as an assembly if necessary.

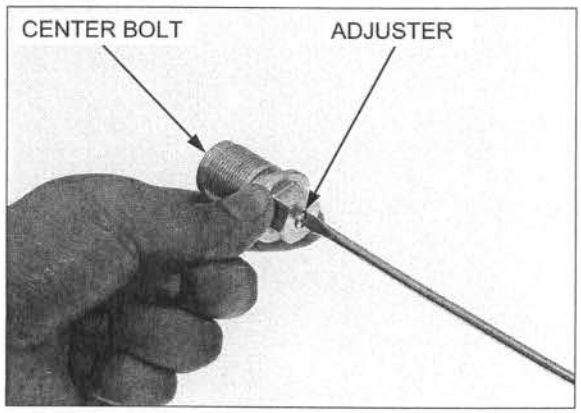

PUSH ROD

Check the push rod for bends, wear or damage replace it if necessary.

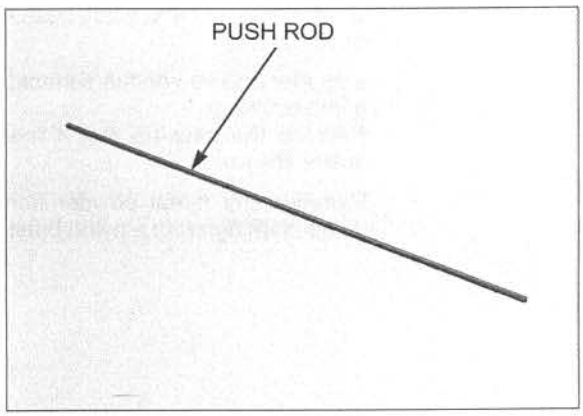

FORK SLIDER/OUTER TUBE

Check the outer tube and fork slider for score marks, scratches and excessive or abnormal wear.
Check the outer tube for damage or bend.

Replace the outer tube if necessary.

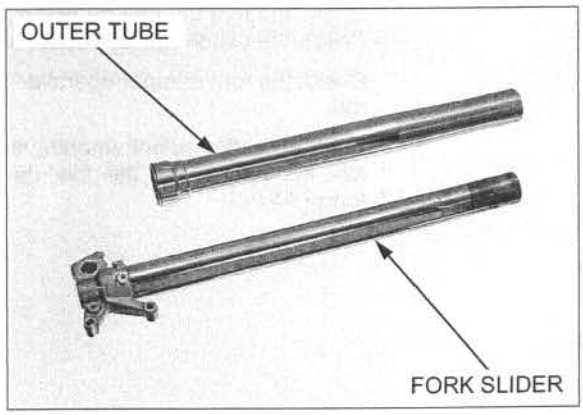

Set the fork slider on V-blocks, and measure the runout. Turn the fork slider, and measure the runout using a dial indicator.

Actual runout is 1/2 of the total indicator reading.

SERVICE LIMIT: 0.2 mm (0.01 in)

Do not reuse the fork slider if it is bent.

Replace if the service limit is exceeded, or there are scratches or nicks that will allow fork oil to leak past the seals.

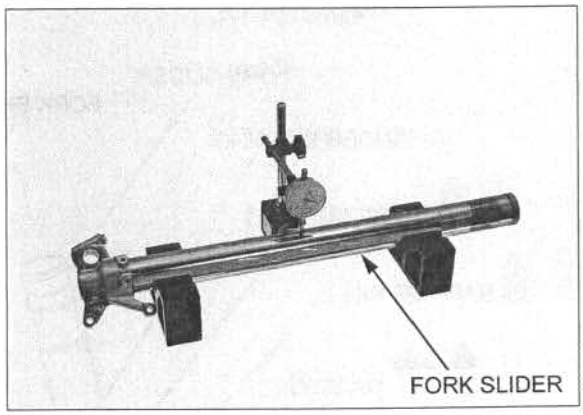

FORK SPRING

Measure the fork spring free length by placing it on a flat surface.

SERVICE LIMIT: 451 mm (17.8 in)

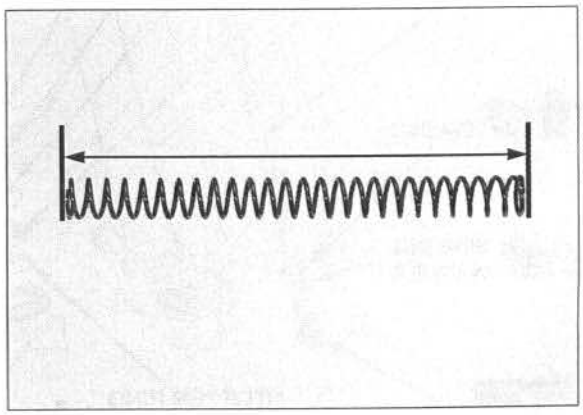

SLIDER BUSHING/GUIDE BUSHING/BACK-UP RING

Check the slider and guide bushings for excessive wear or scratches.

If copper appears on the surface, replace the slider and guide bushings.
Replace the back-up ring if there is distortion at the points shown.

Remove any metal powder from the fork slider and guide bushings with a nylon brush and fork oil.

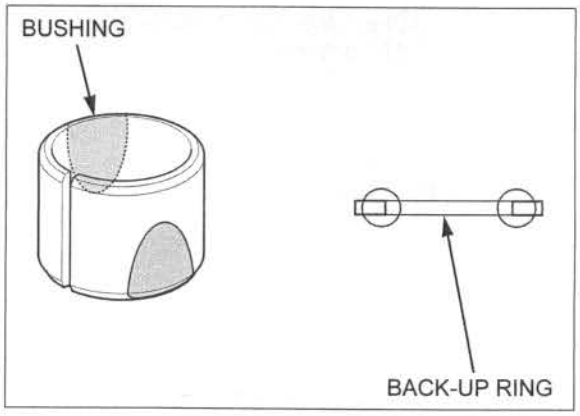

FORK DAMPER

Check the fork damper for bends or damage.
Check the piston rod for bends, wear or damage.

Check the fork damper operation by pumping the piston rod.

If the operation is not smooth, fill the fork damper with fork oil, and check the fork damper operation again (page 14-26).

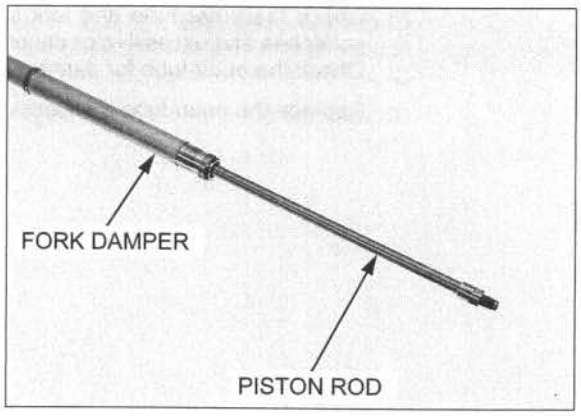

ASSEMBLY

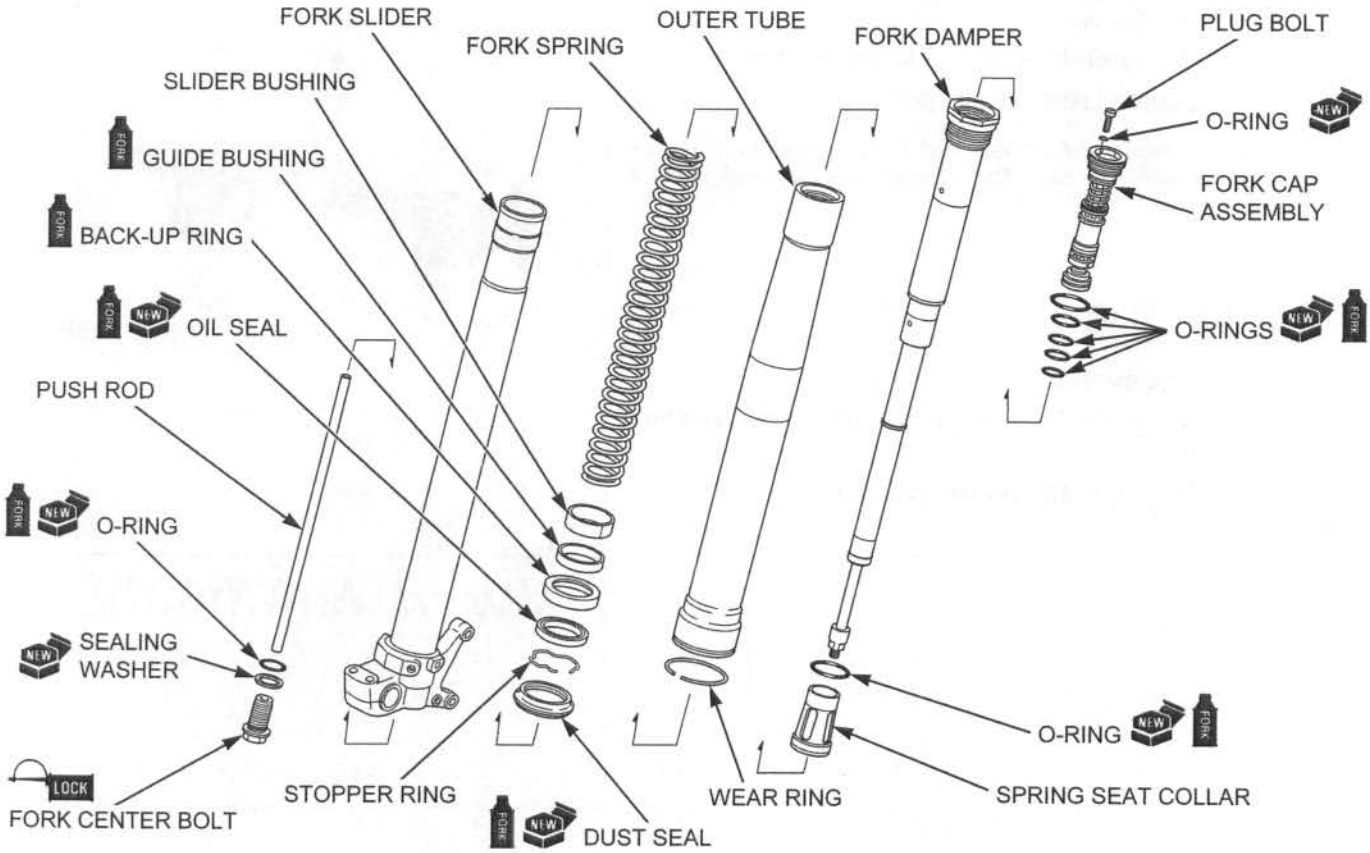

Before assembly, wash all parts with a high flash point or non-flammable solvent and wipe them dry.

OUTER TUBE AND SLIDER ASSEMBLY

Wrap the end of the slider with tape.
Coat new fork oil seal and dust seal lips with recommended fork oil (page 14-24).

Install the dust seal and stopper ring onto the fork slider.
Install the oil seal onto the fork slider with its marked side facing the dust seal.

Remove the tape from the end of the fork slider.

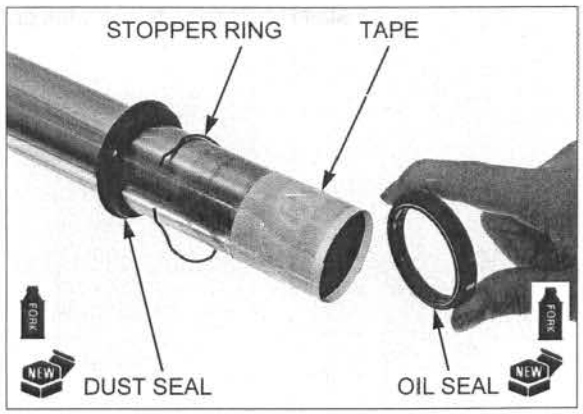

Be careful not to damage the slider bushing coating. Do not open the slider bushing more than necessary.

Install the back-up ring, guide bushing and slider bushing.

NOTE:
- Install the back-up ring with its flange side facing toward the guide bushing.
- Remove the burrs from the bushing mating surface, being careful not to peel off the coating.

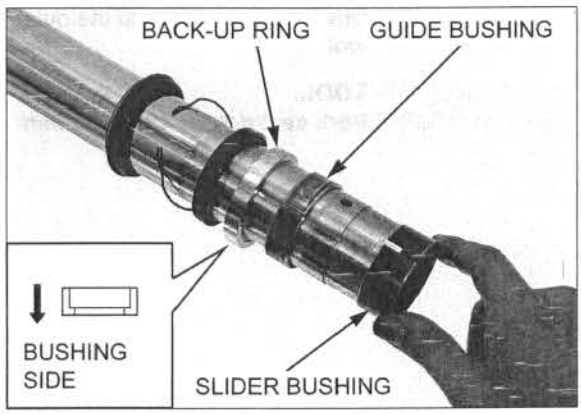

Coat the guide bushing and slider bushing with recommended fork oil (page 14-24), and install the fork slider into the outer tube.

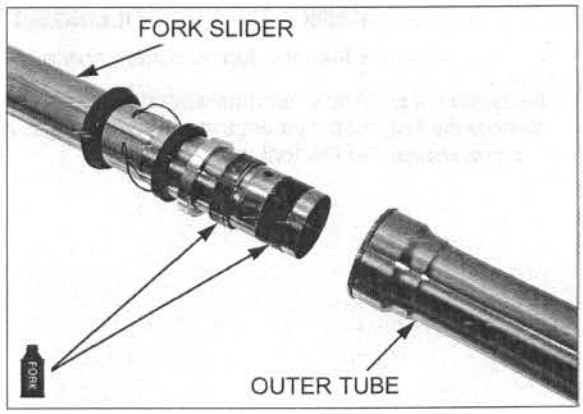

Drive in the guide bushing together with the back-up ring into the outer tube using the special tool.
Drive the oil seal into the outer tube using the special tool.

TOOL:

Fork seal driver, 48.2 x 58 mm	**070MD-MEN0100 or 070MD-MENA100 (U.S.A. only)**

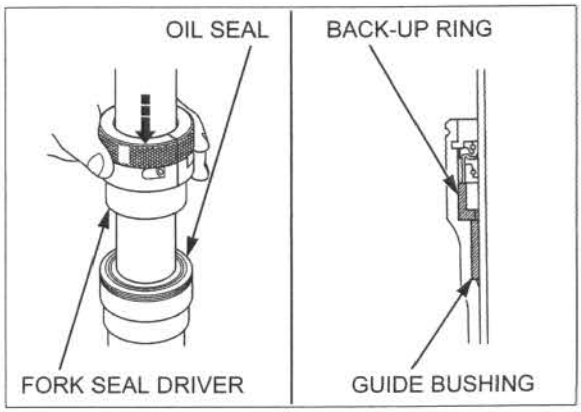

Install the stopper ring into the groove in the outer tube.

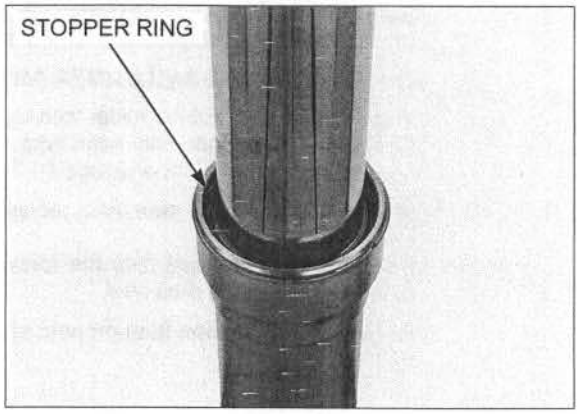

Drive the dust seal into the outer tube using the special tool.

TOOL:
Fork seal driver, 48.2 x 58 mm **070MD-MEN0100 or 070MD-MENA100 (U.S.A. only)**

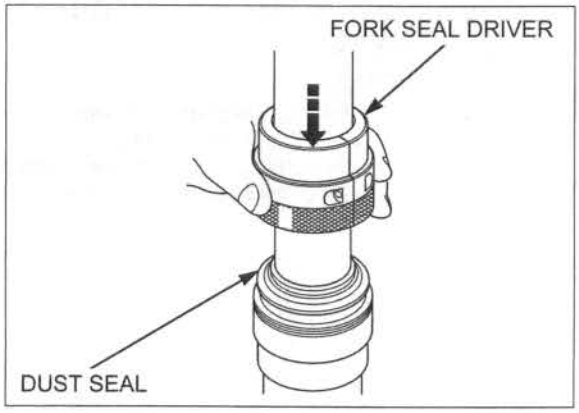

FORK DAMPER REFILLING/ASSEMBLY

Clean the fork cap assembly and fork damper threads.

Be careful not to damage the fork cap bushings.

Apply recommended fork oil (page 14-24) to the fork cap bushings and new O-rings, and install the O-rings to the fork cap assembly.

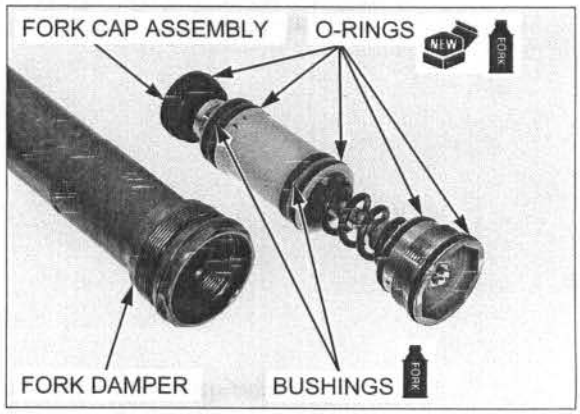

Extend the piston rod to its maximum length.

Pour the recommended fork oil into the fork damper.

RECOMMENDED FORK OIL:
KHL15-11 (KYB)

STANDARD OIL CAPACITY:
211 cm³ (7.1 US oz, 7.4 Imp oz)

Pump the piston rod slowly several times and bleed any air from the fork damper.

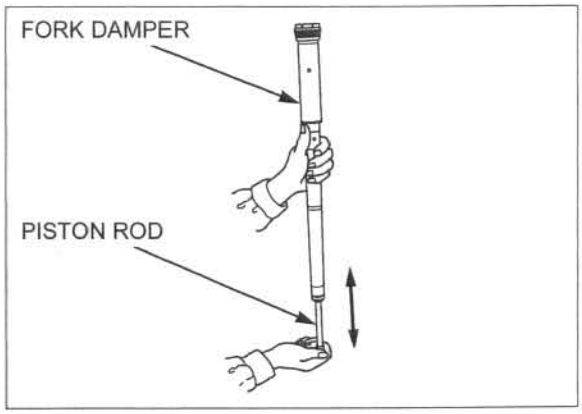

Hold the damper rod, install the fork cap assembly into the fork damper.

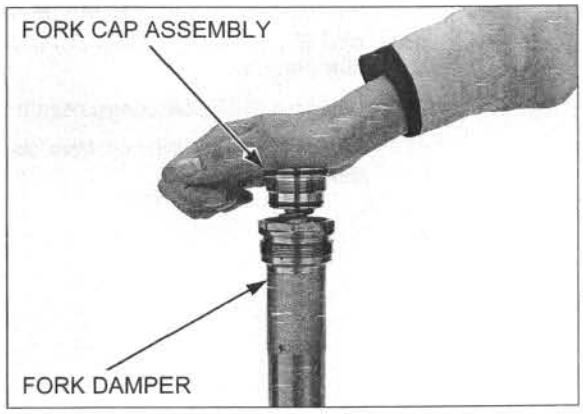

Set the fork damper in a vise with a piece of wood or soft jaws to avoid damage.

Hold the fork damper using the special tool.

TOOL:

Lock nut wrench, 49 mm	**070MA-MEN0100 or 070MA-MENA100 (U.S.A. only)**

Tighten the fork cap assembly to the specified torque using the special tool while holding the fork damper.

TOOL:

Fork cap bolt holder, 36 mm	**070MB-MEN0100 or 070MB-MENA100 (U.S.A. only)**

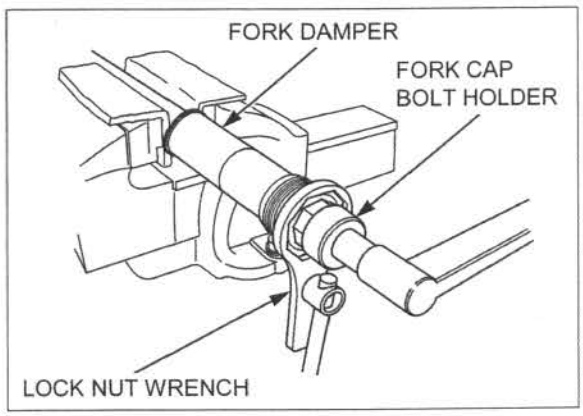

TORQUE: 28 N·m (2.9 kgf·m, 21 lbf·ft)

Turn the fork center bolt lock nut clockwise until it is fully seated.

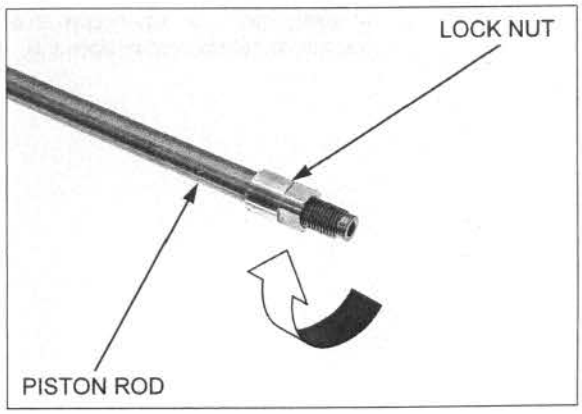

NOTE:

- Cover the fork damper oil holes with shop towel.
- Make sure the compression damping adjuster counterclockwise to the softest position.
- Check the piston rod sliding surface for damage.
- Apply recommended fork oil (page 14-24) to the piston rod sliding surface.

Be careful not to bend or damage the piston rod when the piston rod is stroked.

Cover the piston rod end to prevent damage.

Blow out any extra fork oil in the fork damper by fully stroking the piston rod.

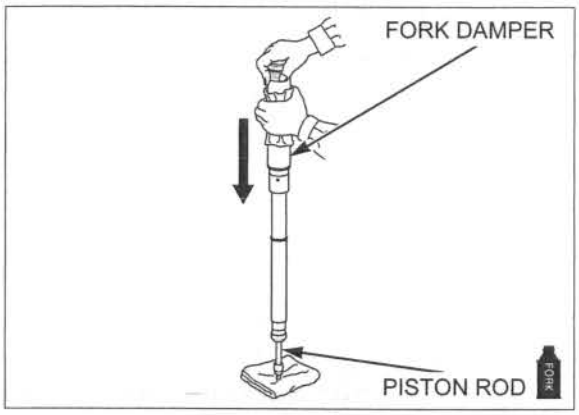

NOTE:

By doing following procedure, about 10 cm^3 (0.3 US oz, 0.4 Imp oz) of fork oil will be drained from the fork damper through the oil hole. This will cause 201 cm^3 (6.8 US oz, 7.1 Imp oz) of fork oil to be left in the fork damper.

Blow out the oil off completely from the fork damper.

Drain the extra fork oil from the oil holes of the fork damper.

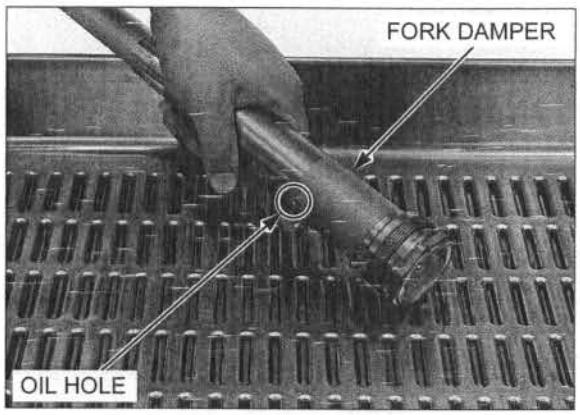

FORK DAMPER OPERATION INSPECTION

- Make sure the compression damping adjuster counterclockwise to the softest position.
- Check the piston rod sliding surface for damage.
- Apply fork oil to the piston rod sliding surface.

Be careful not to bend or damage the piston rod when the piston rod is stroked.

Inspect the fork damper operation after air bleeding (page 14-25).

Cover the piston rod end to prevent damage.

Fully stroke the piston rod by pushing down the fork damper.
Check the piston rod for smooth operation.

If the piston rod operation is not smooth, check the piston rod for bends or damage.

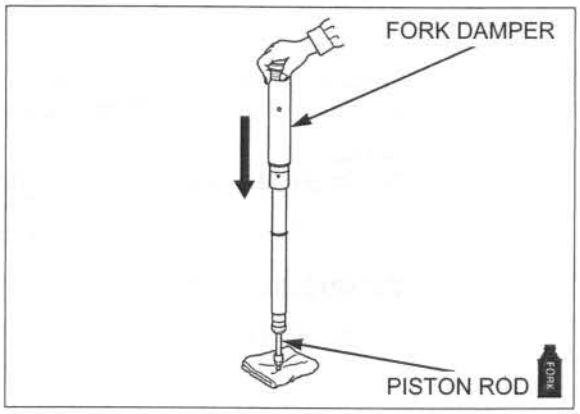

Hold the fork damper on level ground while the piston rod is fully extended and compressed by hand.

Release the piston rod then check that it extends to its maximum length.

If the piston rod does not extend to maximum, bleed the fork damper again.

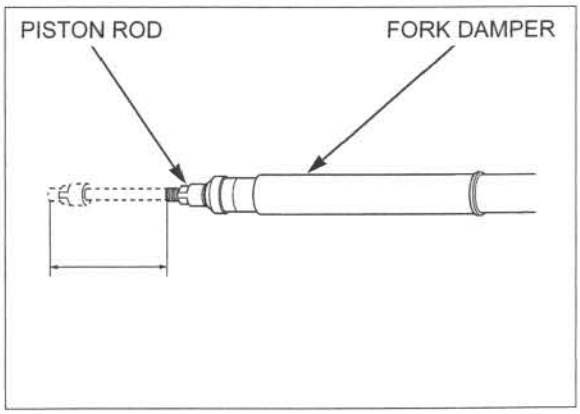

Wipe off any oil completely from the fork damper.

Compress the piston rod 200 – 250 mm (7.9 – 9.8 in) from fully extended and, hold the fork damper in an upright position for 10 minutes.

There should be no oil leaking from the fork damper and piston rod.

If oil leaks from the fork damper or piston rod, replace the fork damper assembly.

Hold the fork damper on level ground, and release the piston rod, then check that the piston rod extends to its maximum length.

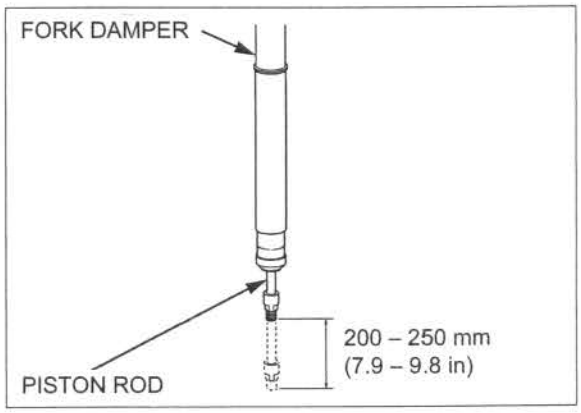

FORK DAMPER INSTALLATION/PREPARATION

If the outer tube and fork slider have not been disassembled, turn the fork upside down for 20 minutes, and drain the fork oil from the inside of the outer tube and fork slider completely (9.8 cc at 20°C/ 68°F)

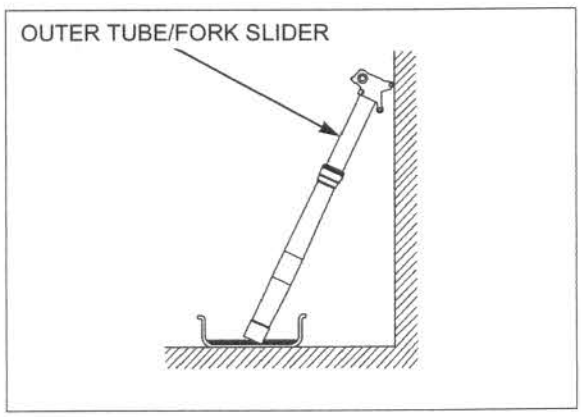

Amount of fork oil left in the fork
(without damper and spring)

unit: cc

		minute						
		5	10	20	35	55	85	145
°C/°F	30/86	12.5	10.2	8.2	6.9	5.8	4.4	3.6
	20/68	13.2	11.4	9.8	7.8	6.6	5.1	4.7
	10/50	14.9	12.5	11.3	9.5	8.0	6.9	5.8
	0/32	16.1	14.2	12.4	10.8	9.8	8.4	7.0

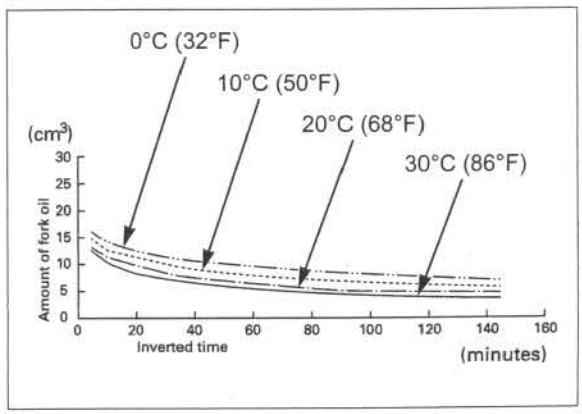

If the fork damper has not been disassembled from the outer tube/fork slider, turn it upside down for 20 minutes, and drain the fork oil from the inside of the outer tube and fork slider completely (15.8 cc at 20°C/68°F)

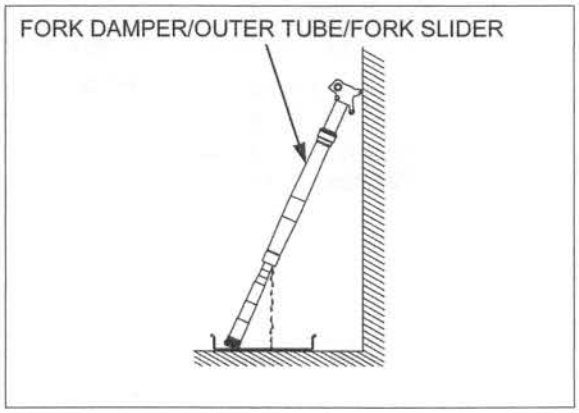

Amount of fork oil left in the fork
(within damper and spring)

unit: cc

		minute						
		5	10	20	35	55	85	145
°C/°F	30/86	20.5	16.8	14.9	13.1	11.8	11.0	9.7
	20/68	21.5	18.1	15.8	14.0	13.1	12.0	10.8
	10/50	22.7	19.8	17.6	16.0	14.8	13.9	12.4
	0/32	24.6	22.0	19.4	17.7	16.5	15.5	14.0

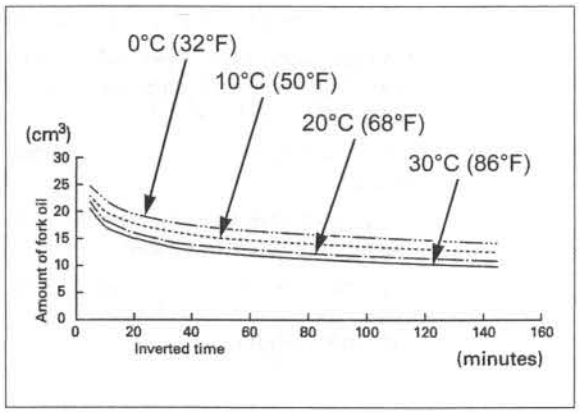

FORK DAMPER INSTALLATION

Tighten the fork center bolt lock nut fully, and measure the length between the fork center bolt lock nut end and piston rod end as shown.

STANDARD: 16 – 18 mm (0.6 – 0.7 in)

Wipe off any oil completely from the fork damper.

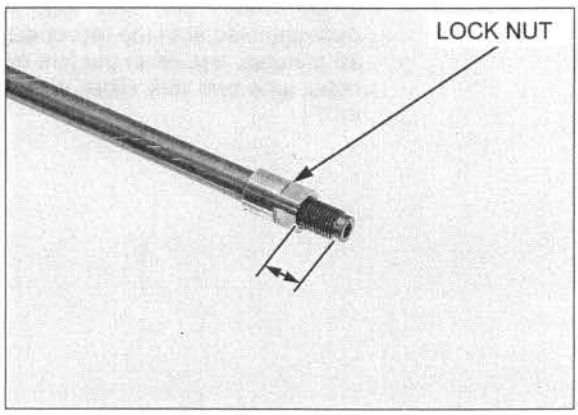

Apply recommended fork oil (page 14-24) to the bushing.

Install the spring seat collar to the fork damper.

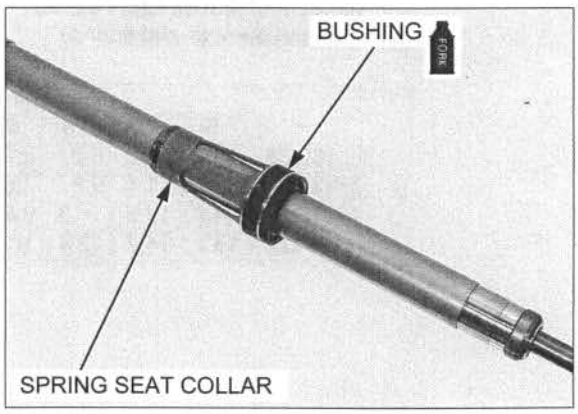

Blow out the oil off completely from the fork spring.

Install the fork spring into the fork assembly.
Apply recommended fork oil (page 14-24) to a new O-ring, and install it to the fork damper.
Temporarily install the fork damper assembly into the fork assembly.

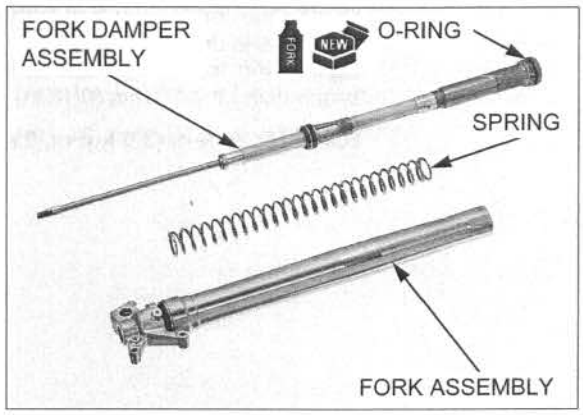

Do not over-tighten the vise on the axle holder.

Set the axle holder of the fork slider in a vise with a piece of wood or soft jaws to avoid damage.

Push the fork damper out from the slider until the fork center bolt lock nut is fully exposed, and install the piston base or mechanic's stopper tool between the axle holder and fork center bolt lock nut.

TOOL:

Piston base	**07958-2500001 or**
Fork rod stopper	**07AMB-KZ3A100 (U.S.A. only)**

Install the push rod into the piston rod until it stops.

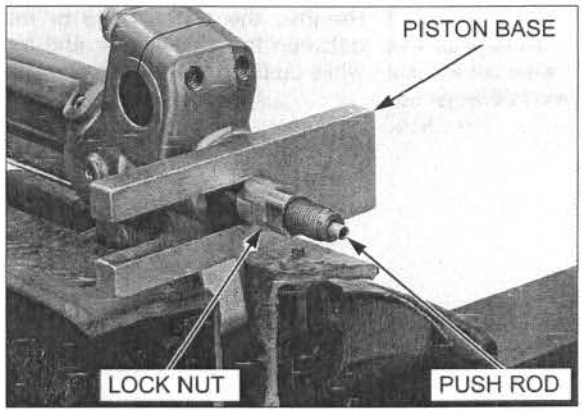

Measure the length between the fork center bolt lock nut end and piston rod end again.

STANDARD: 16 – 18 mm (0.6 – 0.7 in)

Install a new sealing washer to the fork center bolt.

Apply recommended fork oil (page 14-24) to a new O-ring, and install it to the fork center bolt.

Install and tighten the fork center bolt fully by hand.

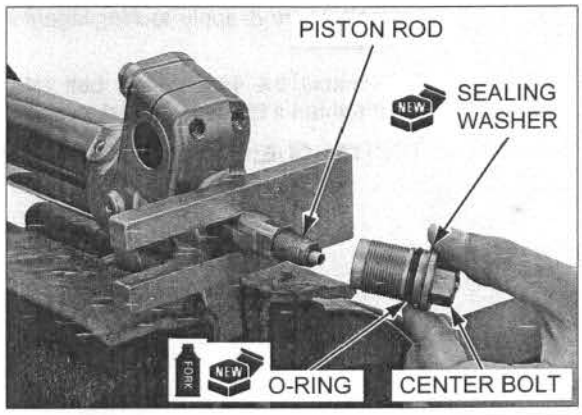

Measure the length of the fork center bolt lock nut and fork center bolt clearance.

STANDARD: 1.0 – 3.5 mm (0.04 – 0.14 in)

If the clearance is out of specification, check the fork center bolt lock nut and fork center bolt installation.

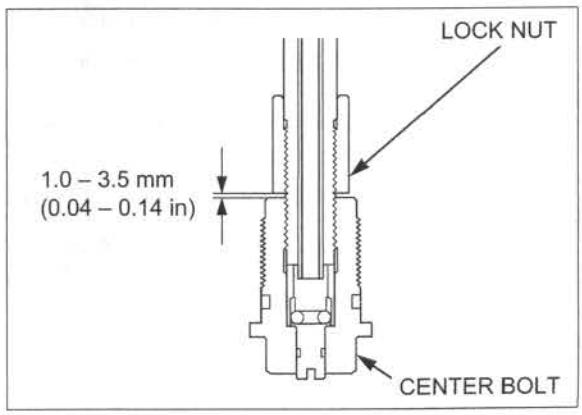

Tighten the fork center bolt lock nut to the fork center bolt by hand until they touch.
Tighten the fork center bolt lock nut to the specified torque using the 15 mm (9/16 in) open end wrench.

TORQUE: 29 N·m (3.0 kgf·m, 21 lbf·ft)

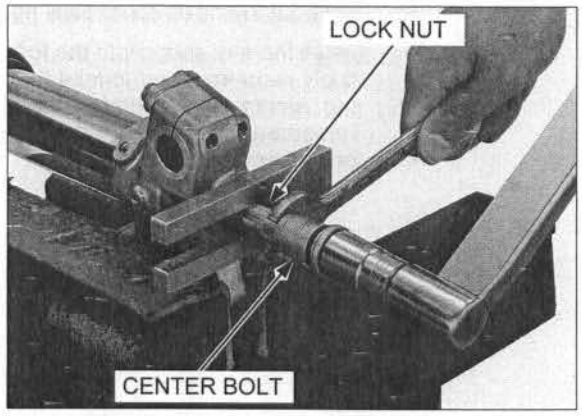

Be careful not to damage the fork center bolt lock nut and fork center bolt hole.

Remove the piston base or mechanic's stopper tool between the axle holder and fork center bolt lock nut while pushing the fork damper.

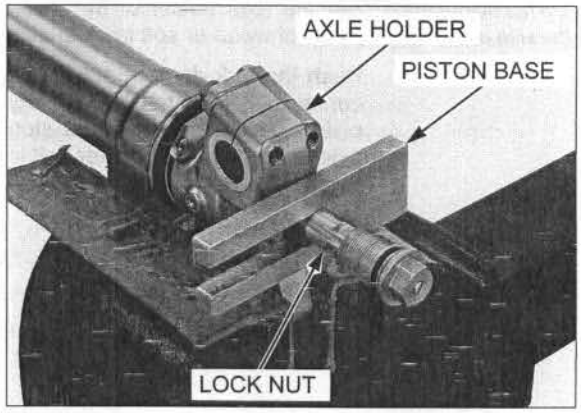

Clean and apply locking agent to the fork center bolt threads.

Install the fork center bolt into the axle holder and tighten it to the specified torque.

TORQUE: 55 N·m (5.6 kgf·m, 41 lbf·ft)

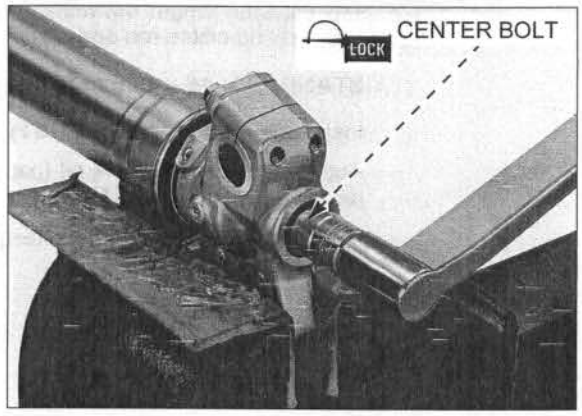

Temporarily install the fork damper into the outer tube.

Measure the length between the axle holder and outer tube.

Compare the length at assembly and disassembly; they should be same length.

STANDARD: 319 ± 2 mm (12.6 ± 0.1 in)

If the length at assembly is longer than at disassembly, check the fork center bolt and fork center bolt lock nut installation.

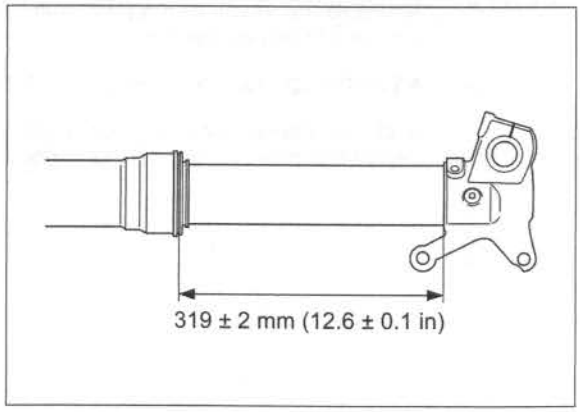

FORK OIL CAPACITY ADJUSTMENT

Remove the fork damper from the outer tube.

Be sure the oil capacity is the same in both fork legs.

Pour the recommended fork oil into the outer tube.

RECOMMENDED FORK OIL:
KLH15-11 (KYB)

STANDARD FORK OIL CAPACITY:
'09: 350 cm³ (11.8 US oz, 12.3 Imp oz)
After '09: 355 cm³ (12.0 US oz, 12.5 Imp oz)

Maximum fork oil capacity:	
362 cm³ (12.2 US oz, 12.7 Imp oz)	Slightly stiffer near full compression.
Minimum fork oil capacity:	
305 cm³ (10.3 US oz, 10.7 Imp oz)	Slightly softer near full compression.

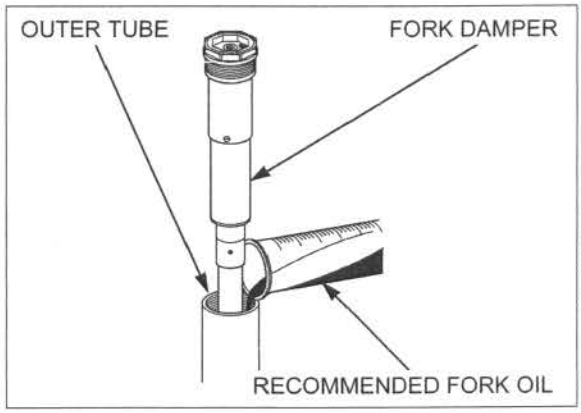

Pull up the outer tube slowly, and loosely install the fork damper into the outer tube.

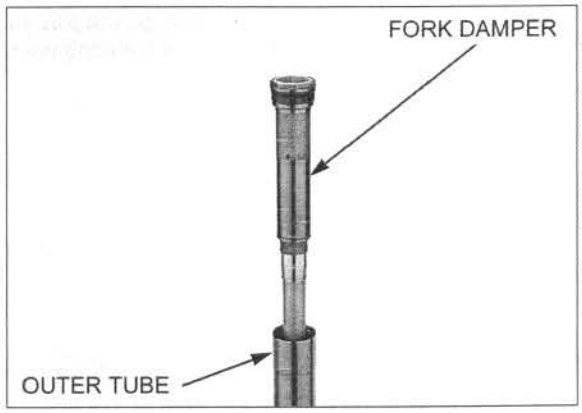

Return the rebound and compression damping adjusters to the original positions as noted during removal.

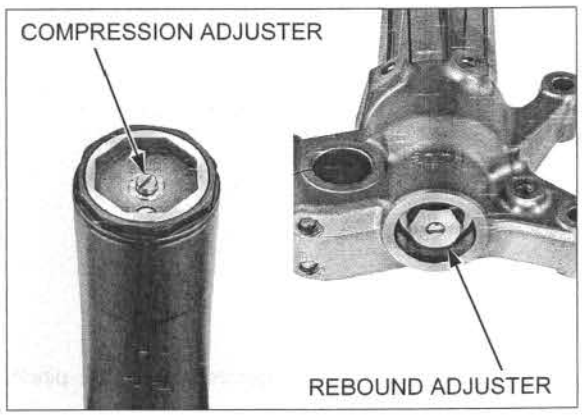

INSTALLATION

Install the fork leg, and tighten the bottom bridge pinch bolts to the specified torque.

TORQUE: 20 N·m (2.0 kgf·m, 15 lbf·ft)

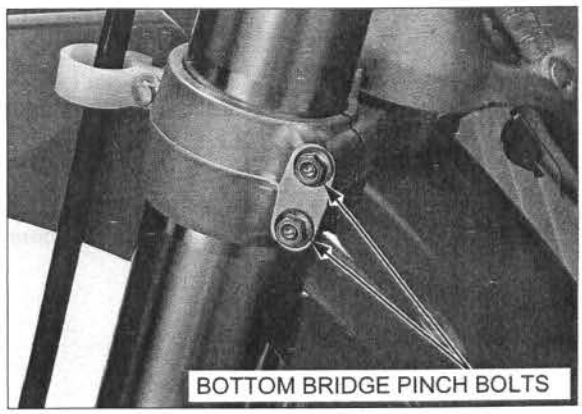

Do not use a crescent or adjustable wrench to the loosen the fork damper; it could be damaged.

When the fork leg is disassembled, tighten the fork damper to the specified torque using the special tool.

TOOL:
Lock nut wrench, 49 mm — **070MA-MEN0100 or 070MA-MENA100 (U.S.A. only)**

Refer to torque wrench reading information in "SERVICE INFORMATION" (page 14-3).

TORQUE:
Actual: 30 N·m (3.1 kgf·m, 22 lbf·ft)
Indicated: 27 N·m (2.8 kgf·m, 20 lbf·ft)

Install the handlebar (page 14-36).

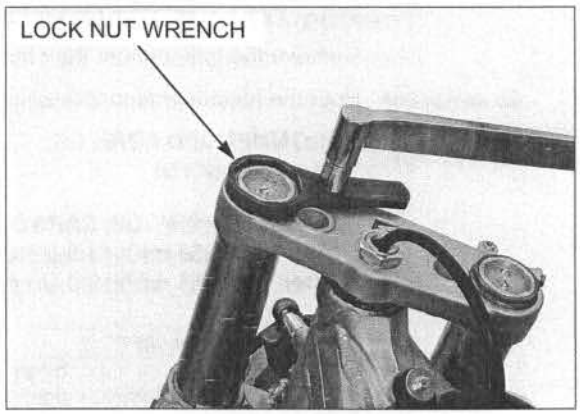

STANDARD POSITION

Loosen the bottom bridge pinch bolts.

For ease when releasing the air pressure after the forks are installed, position the fork outer tubes so the plug bolts are in front of the compression adjusters.

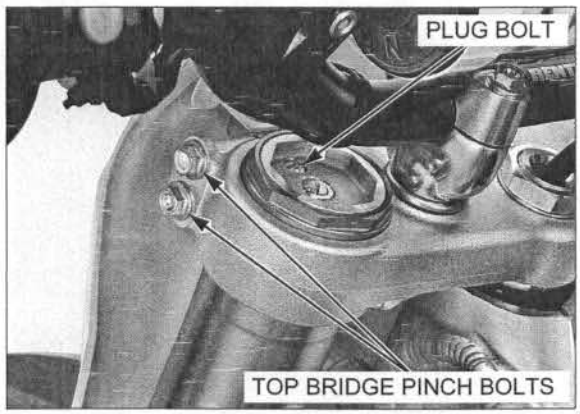

Align the top surface of the top bridge with the outer tube upper surface as shown.

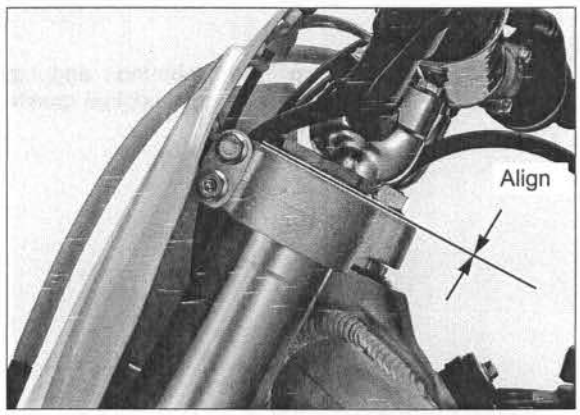

Tighten the bottom bridge pinch bolts to the specified torque.

TORQUE: 20 N·m (2.0 kgf·m, 15 lbf·ft)

Tighten the top bridge pinch bolts to the specified torque.

TORQUE: 22 N·m (2.2 kgf·m, 16 lbf·ft)

NOTICE

Over-tightening the pinch bolts can deform the outer tube. A deformed outer tube must be replaced.

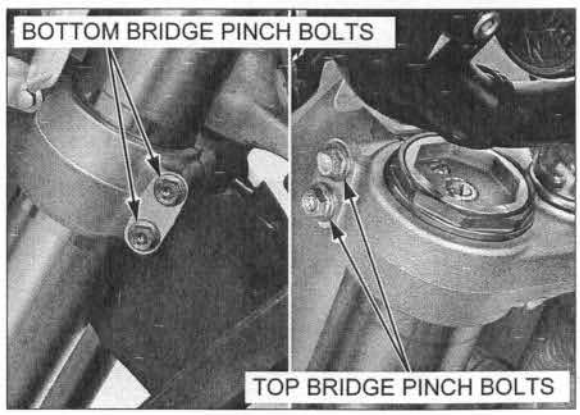

Apply locking agent to the fork protector mounting bolt threads.

Install the fork protector and fork protector mounting bolts.
Tighten the fork protector mounting bolts to the specified torque.

TORQUE: 7.0 N·m (0.7 kgf·m, 5.2 lbf·ft)

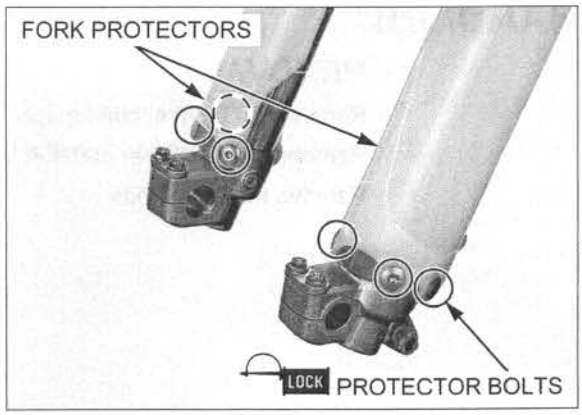

Apply locking agent to the brake caliper mounting bolt threads.

Install the front brake caliper/bracket assembly and brake caliper mounting bolts.
Tighten the front brake caliper mounting bolts to the specified torque.

TORQUE: 30 N·m (3.1 kgf·m, 22 lbf·ft)

Install the brake hose clamp and bolts.
Tighten the bolts securely.

Install the front wheel (page 14-12).

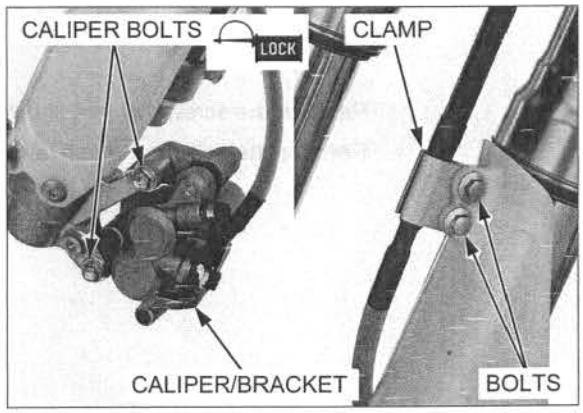

Inspect the wear rings for wear or damage.

Replace the wear ring, if it is 1.5 mm (0.06 in) or flat with the outer tube.

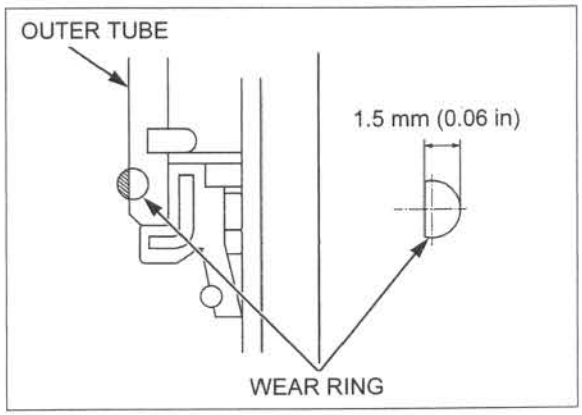

Make sure the wear ring end gaps face rearward.

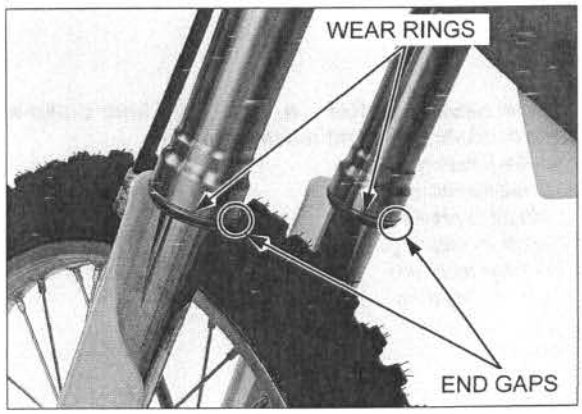

HANDLEBAR

REMOVAL

Remove the number plate (page 3-5).

Remove the handlebar pad from the handlebar.

Remove the wire bands.

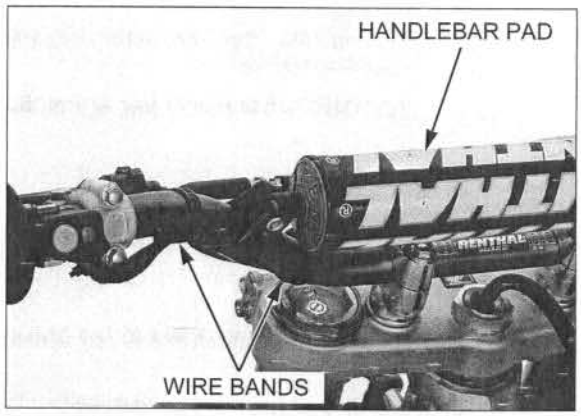

Remove the screw, holders and engine stop switch.

Remove the bolts and clutch lever bracket and holder.

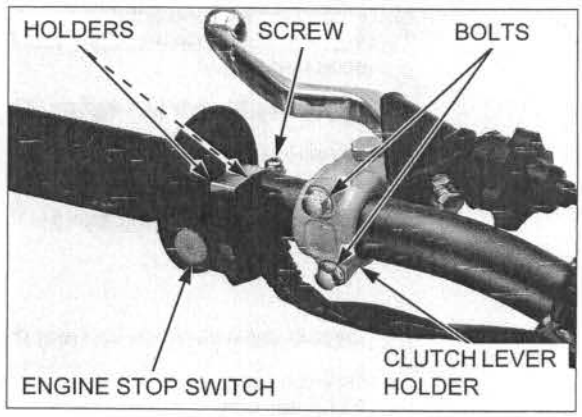

Remove the handlebar grip.

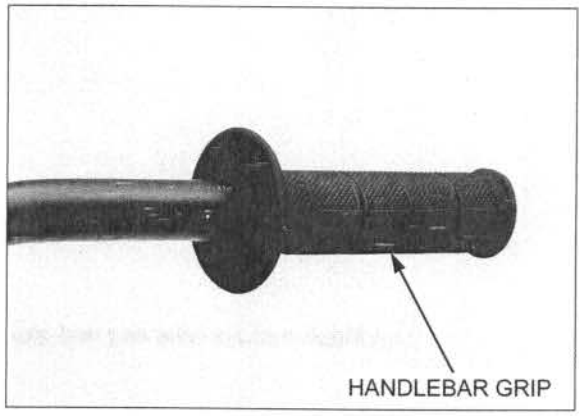

Do not disconnect the hydraulic line. Keep the brake master cylinder upright to prevent air from entering the hydraulic system.

Remove the bolts, front brake master cylinder holder and master cylinder.

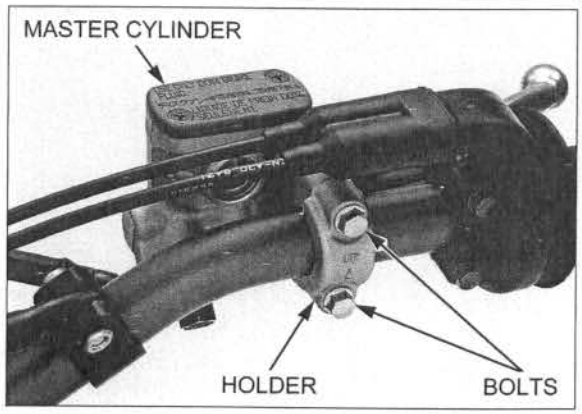

Remove the throttle housing as an assembly as follows: Loosen the throttle housing bolts, turn the handlebar to the right fully, then remove the throttle housing.

If you will disassemble the throttle housing, remove the throttle housing dust cover and throttle housing bolts.

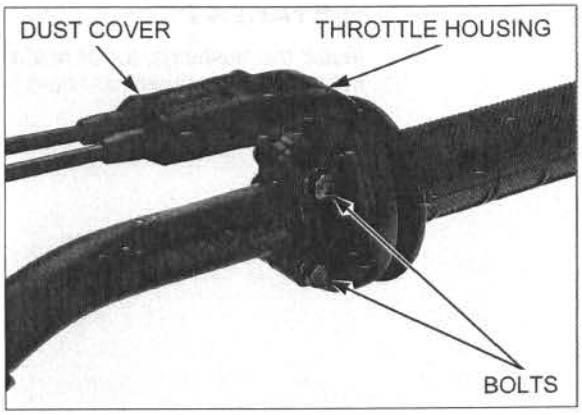

Remove the throttle housing from the handlebar. Disconnect the throttle cables from the throttle pipe. Remove the throttle grip from the throttle pipe.

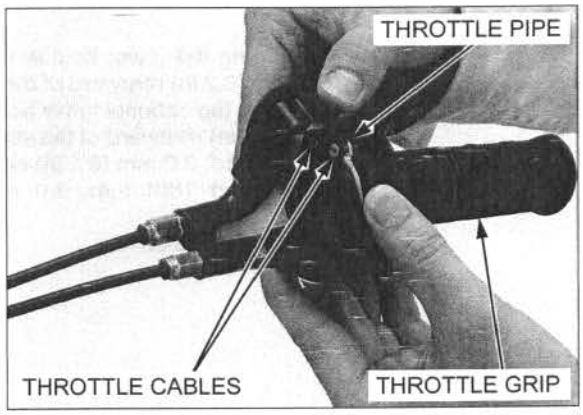

Loosen the handlebar lower holder nuts.

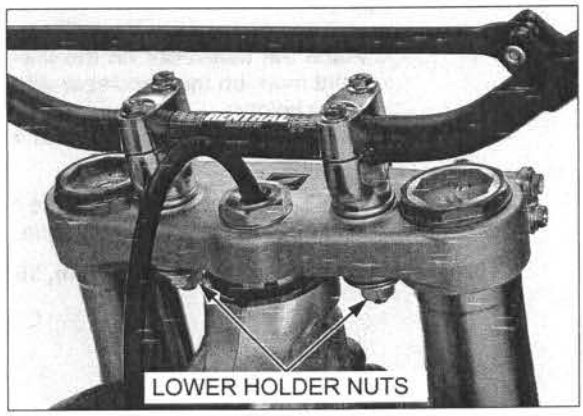

Remove the bolts, upper holders and handlebar. Remove the lower holder nuts, washers, bushings and lower holders.

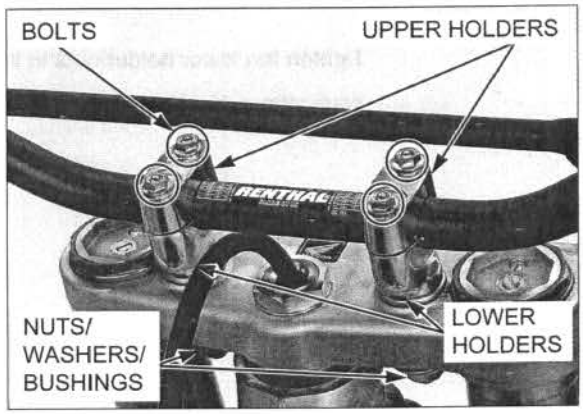

INSTALLATION

Install the bushings, lower holders, washers and lower holder nuts as shown (standard position).

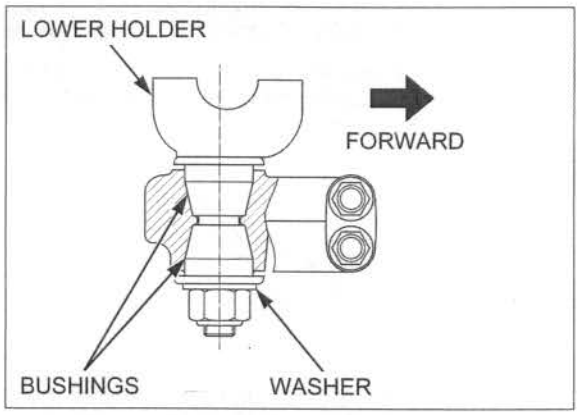

- By turning the lower holder 180°, you can install it 6.0 mm (0.2 in) rearward of the standard position. By installing the optional lower holder, you can set it 3.0 mm (0.1 in) rearward of the standard position.
  - Standard: 3.0 mm (0.1 in) offset to forward
  - Standard 180° turn: 3.0 mm (0.1 in) offset to rearward
  - Optional: No offset

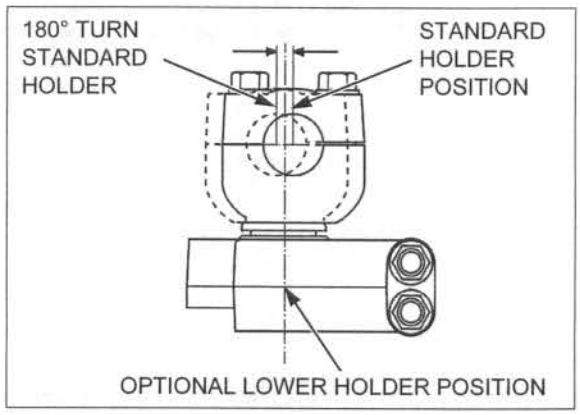

Place the handlebar on the lower holders aligning the paint mark on the handlebar with the top surface of the lower holders.
Install the upper holders with its punch mark facing forward.

Install and tighten the front side bolts first, then the rear side bolts to the specified torque.

TORQUE: 22 N·m (2.2 kgf·m, 16 lbf·ft)

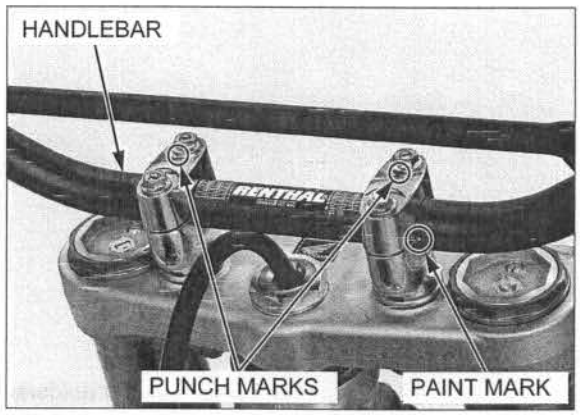

Tighten the lower holder nuts to the specified torque.

TORQUE: 44 N·m (4.5 kgf·m, 32 lbf·ft)

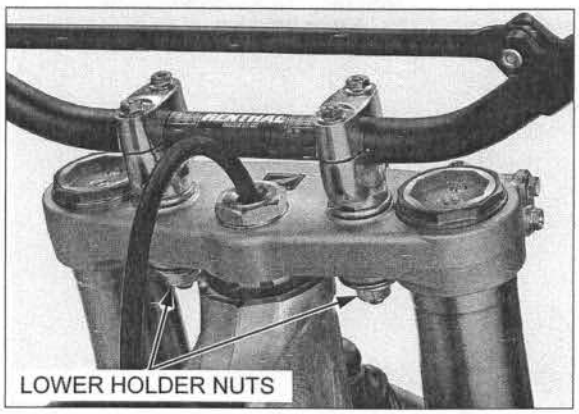

If the handlebar grips are removed, apply Honda Bond A or Pro Honda Handgrip Cement (U.S.A. only) to the inner surface of the grip rubber and to the clean surfaces of the throttle pipe and left side of the handlebar.

Allow the adhesive to dry for approximately an hour before using.

Wait 3 – 5 minutes and install the grip.
Rotate the grips for even application of the adhesive.

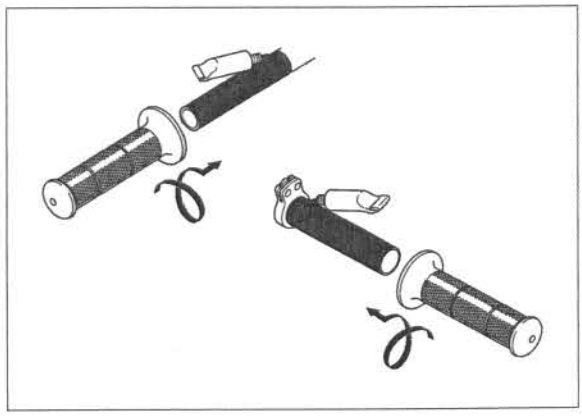

Align the edges on the throttle pipe end with the tab and "△" mark of the right handlebar grip.
Align the tab on the left handlebar grip with the paint mark on the handlebar.

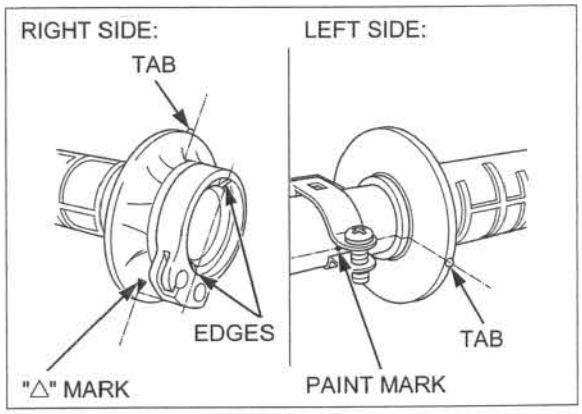

Apply specified grease (page 1-17) to the throttle cable ends and throttle pipe flange groove.
Connect the throttle cables to the throttle pipe.

Tighten the throttle cable bolt to the specified torque.

TORQUE: 4.0 N·m (0.4 kgf·m, 3.0 lbf·ft)

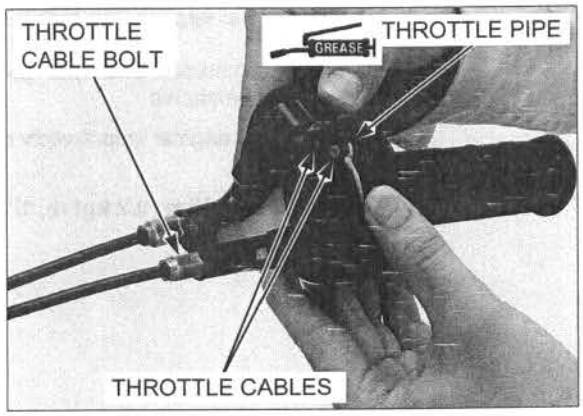

Install the throttle housing, aligning the end of the housing with the paint mark on the handlebar.
Tighten the throttle housing upper bolt first, then the lower bolt.

Adjust the throttle grip freeplay (page 4-7).

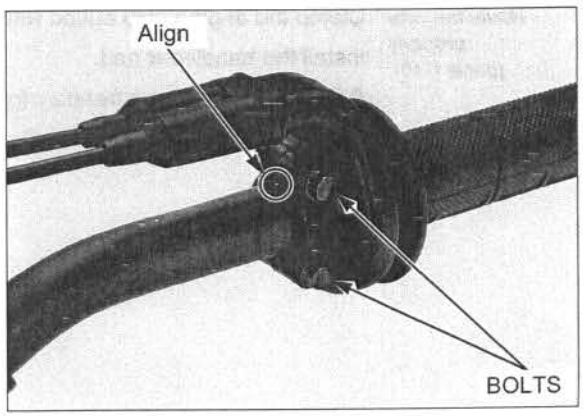

Install the brake master cylinder and holder with the "UP" mark on the holder facing up.
Align the end of the holder with the paint mark on the handlebar.

Install and tighten the upper master cylinder holder bolt first, then the lower bolt to the specified torque.

TORQUE: 9.9 N·m (1.0 kgf·m, 7.3 lbf·ft)

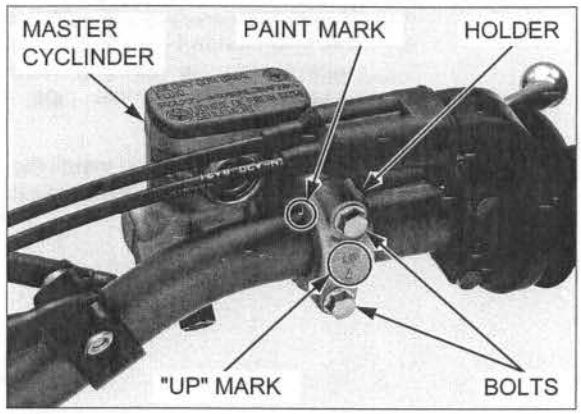

Install the clutch lever bracket and holder with the punch mark on the holder facing up.
Align the end of the holder with the paint mark on the handlebar.

Install and tighten the clutch lever bracket holder upper bolt first, then the lower bolt securely.

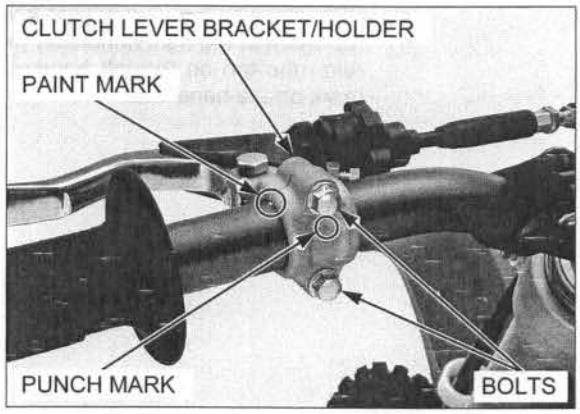

Install the holders, engine stop button and screw on the handlebar.
Align each holder end with the paint mark on the handlebar as shown.

Tighten the engine stop switch screw to the specified torque.

TORQUE: 1.5 N·m (0.2 kgf·m, 1.1 lbf·ft)

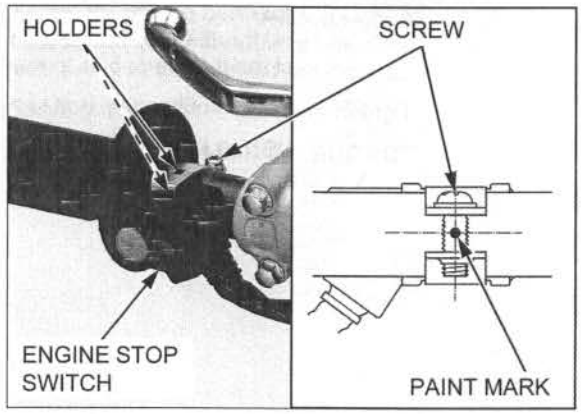

Route the wire properly (page 1-19).

Clamp the engine stop button wire with the wire bands.

Install the handlebar pad.

Adjust the clutch lever freeplay (page 4-27).

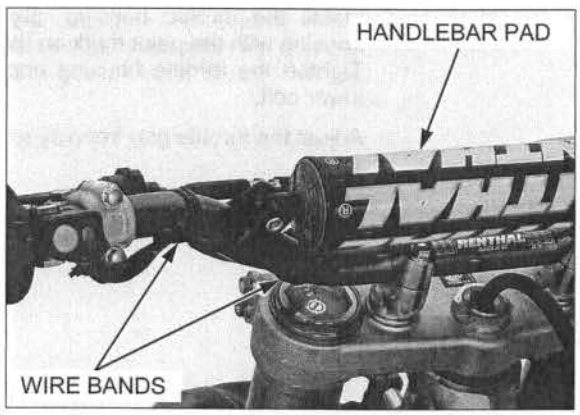

HPSD

REMOVAL/INSTALLATION

Remove the number plate (page 3-5).

Remove the steering damper bolts, collar and steering damper.

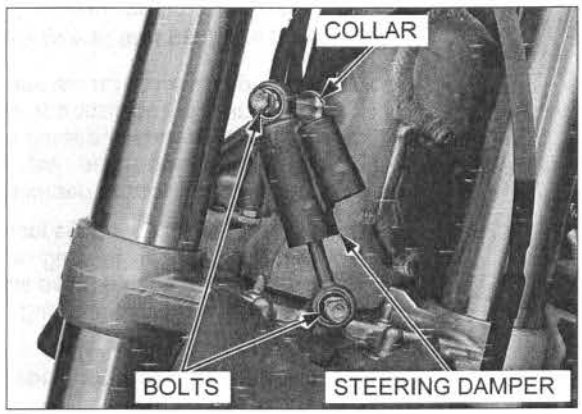

Clean and apply a locking agent to the steering damper bolts.

Install the steering damper onto the steering head pipe with its "UP" mark facing up and facing toward the front.

Install the steering damper, collar and bolts.

- Check that the stopper ring side of the damper rod is facing toward the front.

Tighten the steering damper bolts to the specified torque.

TORQUE: 20 N·m (2.0 kgf·m, 15 lbf·ft)

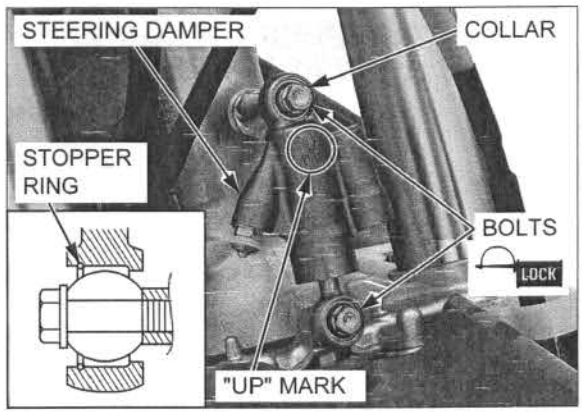

Raise the front wheel off the ground by placing a workstand or equivalent under the engine.
Check that the steering moves smoothly from side-to-side.

Install the number plate (page 3-5).

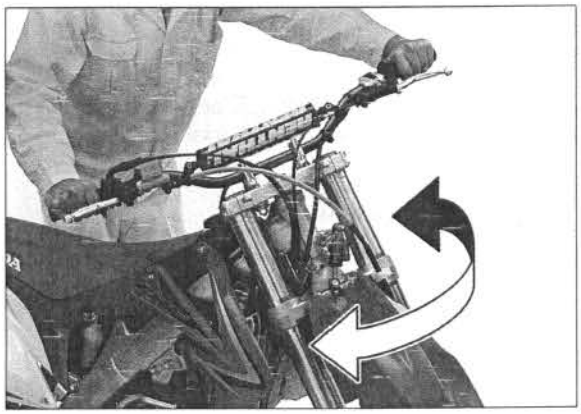

INSPECTION

Remove the steering damper (page 14-39).

Visually inspect the steering damper for wear or damage.

Check the following:

- Damper case for deformation or oil leakage
- Damper rod for bending or damage

Replace the damper case or damper rod if necessary.

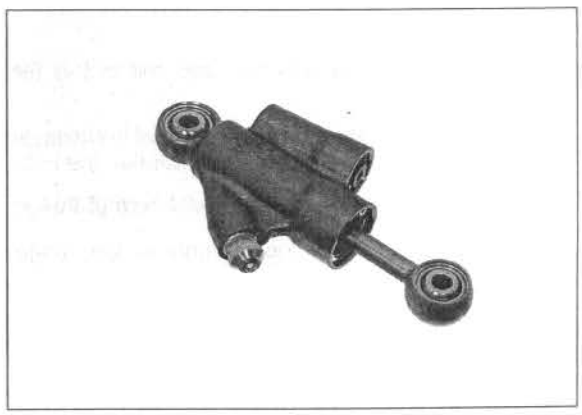

Measure the damper rod length with the "inside" jaws of a vernier caliper.

Fully extend and compress the damper rod by hand. Release the damper rod then check that it extends to its maximum length.

STANDARD (maximum length):
117.55 – 118.35 mm (4.628 – 4.659 in)

Check the damper rod for smooth operation.
If the damper rod operation is not smooth, check the damper rod for bends or damage.
If the damper rod does not extend to maximum, disassemble the steering damper (page 14-42).

Check the spherical bearings for wear or damage.
Move the spherical bearing with your finger. The spherical bearing should move smoothly and quietly.
Replace the spherical bearing if it does not move smoothly or quietly.

Install the steering damper (page 14-39).

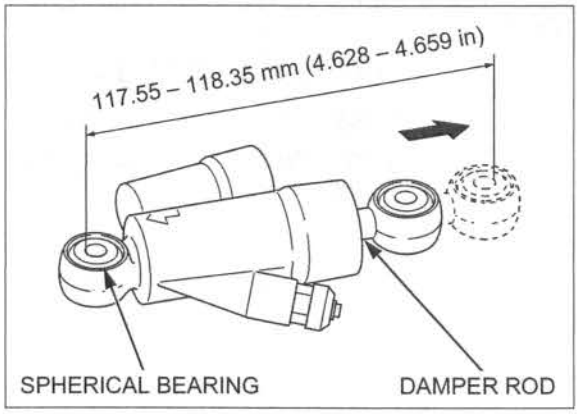

SPHERICAL BEARING REPLACEMENT

Remove the steering damper (page 14-39).

EXCEPT U.S.A.

Remove the stopper ring.
Press the spherical bearing out of the damper mounts.

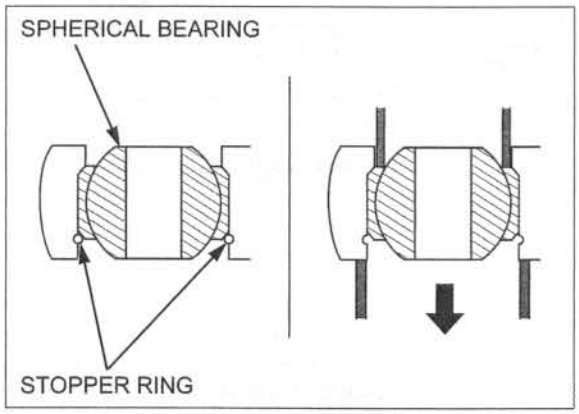

Drive the bearing in evenly; do not allow it to tilt.

Press a new spherical bearing into the damper mounts using the special tool.

TOOL:
Collar **07KPF-VD60100**

Install a new stopper ring into the groove of the damper mounts securely.

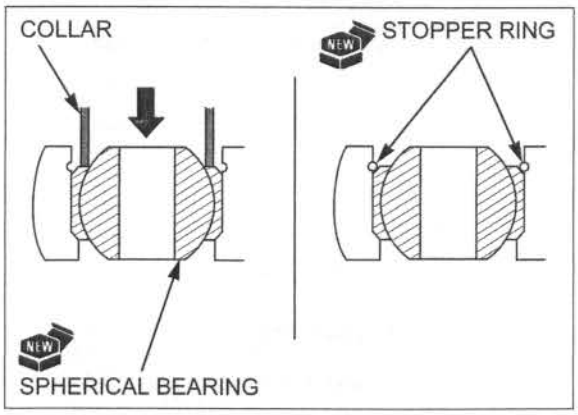

Set a 7 mm bolt and nut to the spherical bearing as shown.

Measure the stabled rotation torque of the spherical bearing inner by rotating the bolt.

STANDARD: 0.04 N·m (0.004 kgf·m, 0.03 lbf·ft) max.

Install the steering damper (page 14-39).

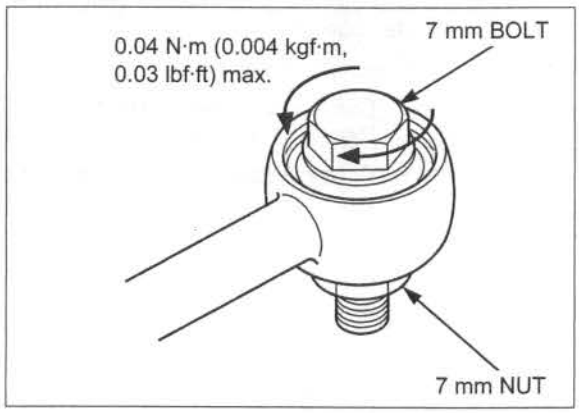

U.S.A. only

Remove the stopper ring from the damper mount.

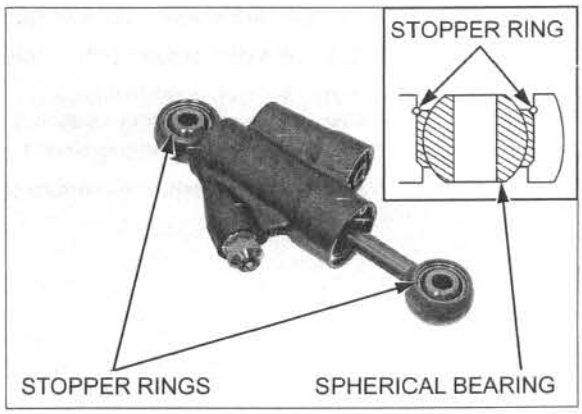

Assemble the special tool and steering damper as shown, then place it in a vise.

TOOL:
Spherical bearing remover 07AMD-MENA100

Gently press the spherical bearing out of the damper.

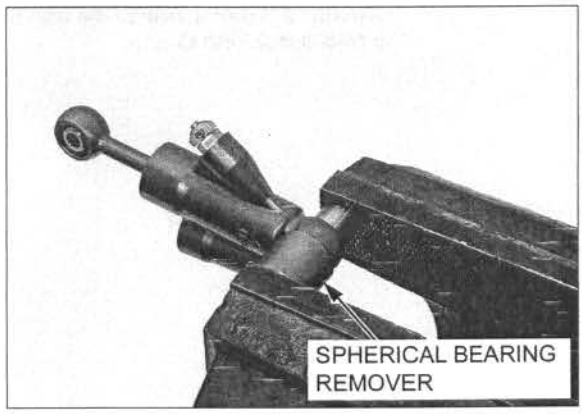

Assemble the special tool and steering damper with a new spherical bearing as shown, then place it in a vise.

TOOL:
Spherical bearing remover 07AMD-MENA100

Use the pressure of the vise to gently press the bearing back into place.

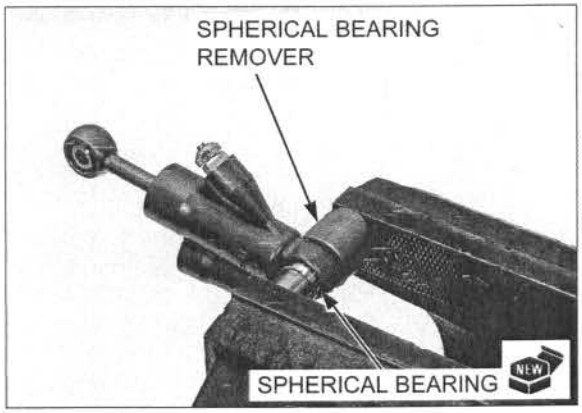

Install the stopper ring into the groove of the damper mount securely.

Install the steering damper (page 14-39).

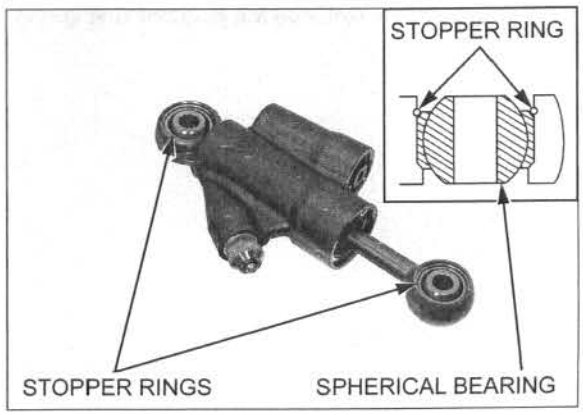

HPSD DISASSEMBLY

Record the damping force adjuster position.

Remove the steering damper (page 14-39).

Clean the damper assembly thoroughly.

Install a 4 mm screw to the end cap.
Remove the snap ring while pushing the end cap, and then remove the end cap and O-ring.

Remove the washer and return spring from the damper case.

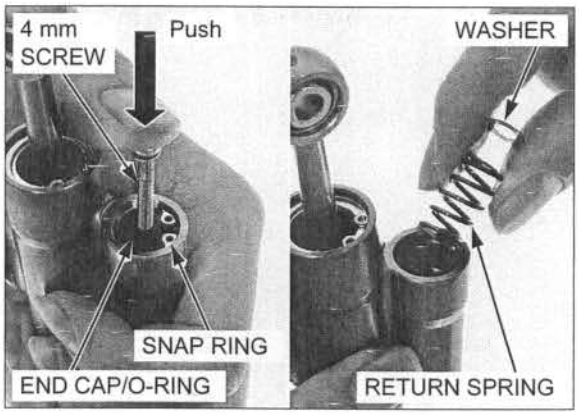

Install a 8 mm screw to the free piston, then remove the free piston and O-ring.

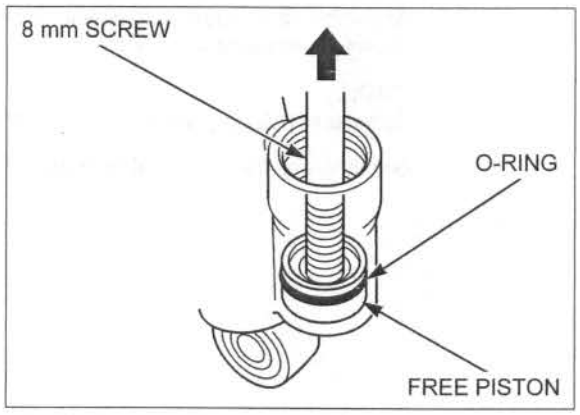

Drain the damper oil from the damper case.

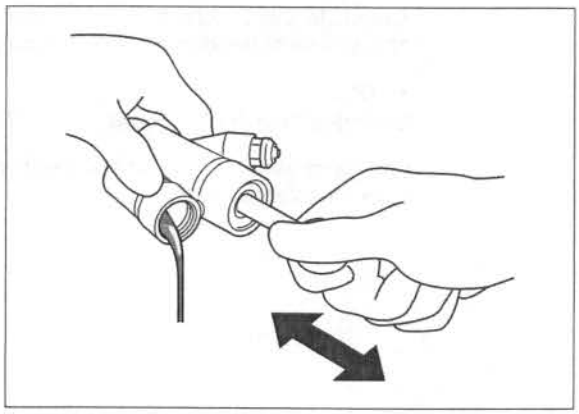

Remove the plug bolt and O-ring.

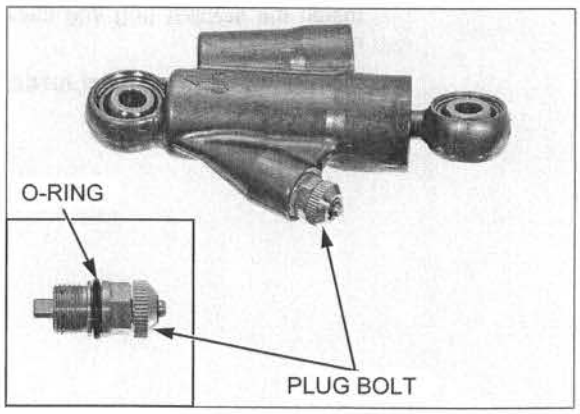

Remove the adjuster piece from the damper case.

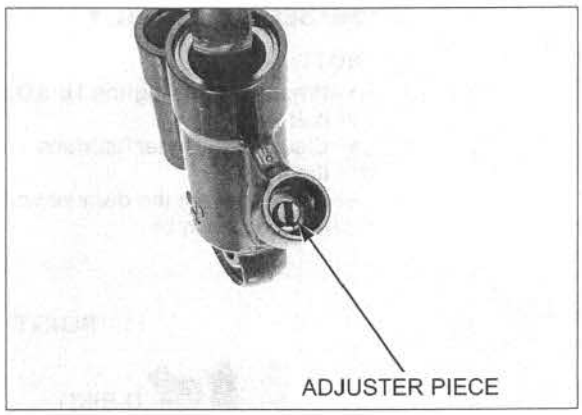

Remove the damper rod side spherical bearing (page 14-40).

Remove the snap ring from the damper case groove.

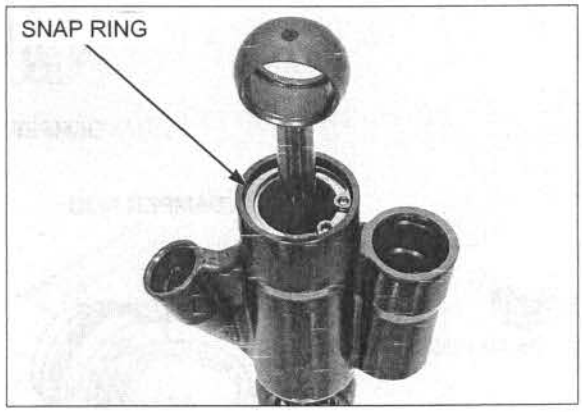

Remove the snap ring from the damper rod as shown.

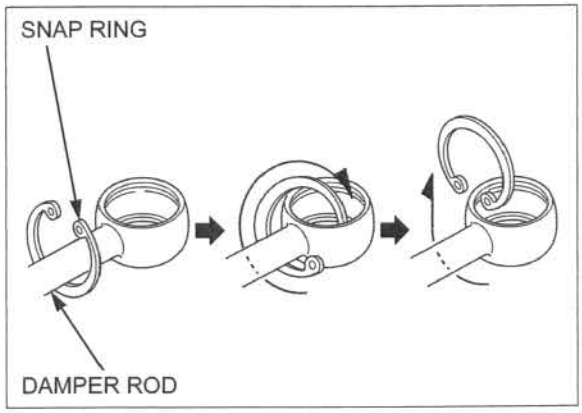

Carefully pull the damper rod and rod guide with the O-ring out of the damper case.

Check the following:

- Rod guide for abnormal scratches
- Damper piston ring for fatigue or damage
- Damper case inner surface for abnormal scratches

Replace the damper case if necessary.
Replace the damper rod as an assembly if necessary.

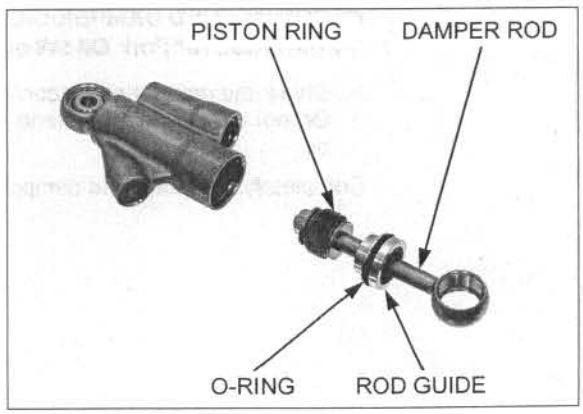

HPSD ASSEMBLY

NOTE:

- When assembling the HPSD, follow the procedures below.
- Clean the inner surface of the damper case thoroughly.
- Bleed air from the damper while having it completely submerged in oil.

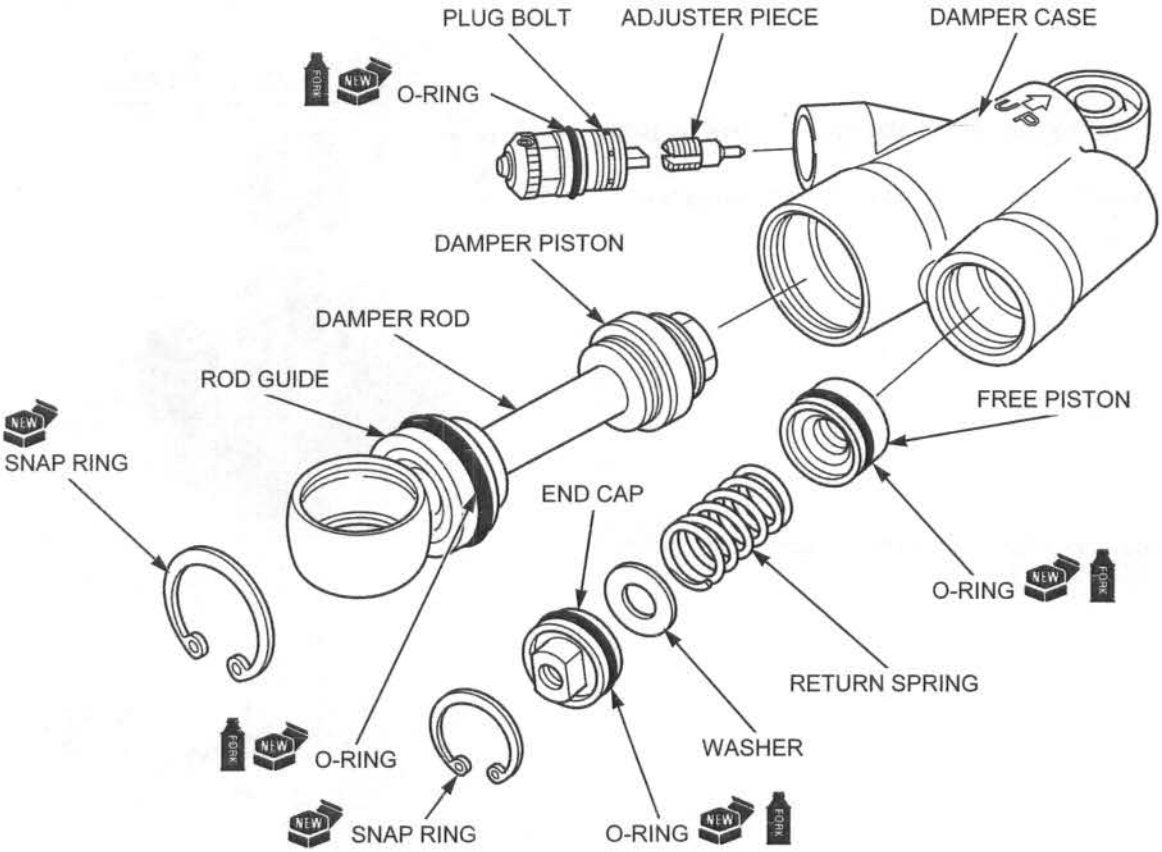

Check that the damper oil temperature is 20°C (68°F).

Pour recommended damper oil into a suitable container until the steering damper is fully submerged.

RECOMMENDED DAMPER OIL:
Pro-Honda HP Fork Oil 5W or equivalent

- Check the damper oil for contamination.
- Do not allow foreign materials to enter the damper oil.

Completely submerge the damper in the oil.

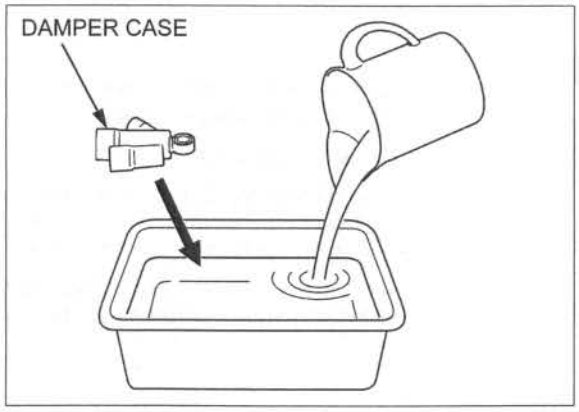

Be careful not to damage or deform the snap ring.

Install a new snap ring to the damper rod as shown.

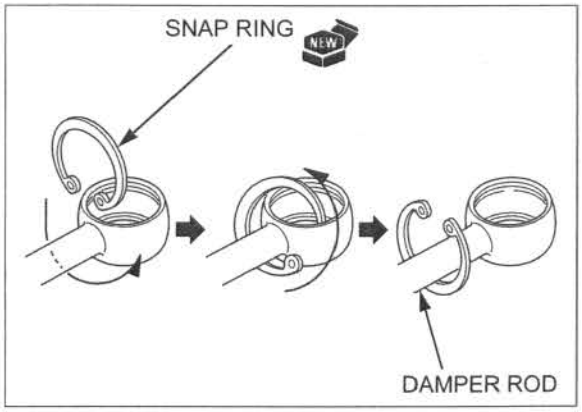

Completely submerge the damper rod in the oil.

Bleed any trapped air at the O-ring seating surface by turning the O-ring.

Install a new O-ring to the rod guide.

Shake the damper rod until there are no air bubbles.

- Be careful not to damage the damper rod and damper piston, especially around the damper rod sliding surface.

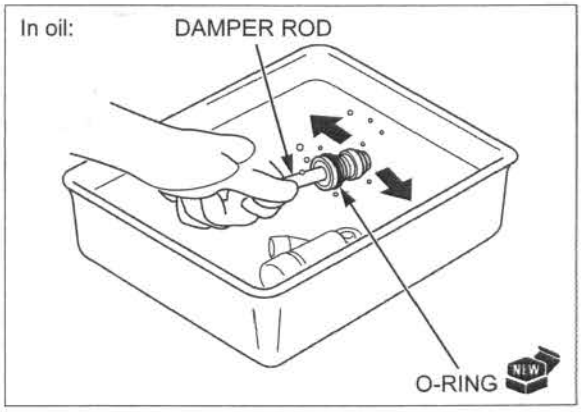

Bleed any air out from the damper case and damper piston following the procedure below:

1. Install the damper piston into the damper case, pump the damper rod quickly.

NOTE:

- To open the piston valve, pump the piston rod quickly.

2. Remove the damper piston from the damper case.
3. Bring any air out from the damper case by using your finger as shown.
4. Repeat steps 1 through 3 at least three times until there are no air bubbles in the damper case and damper piston.

   Install the damper rod into the damper case carefully.

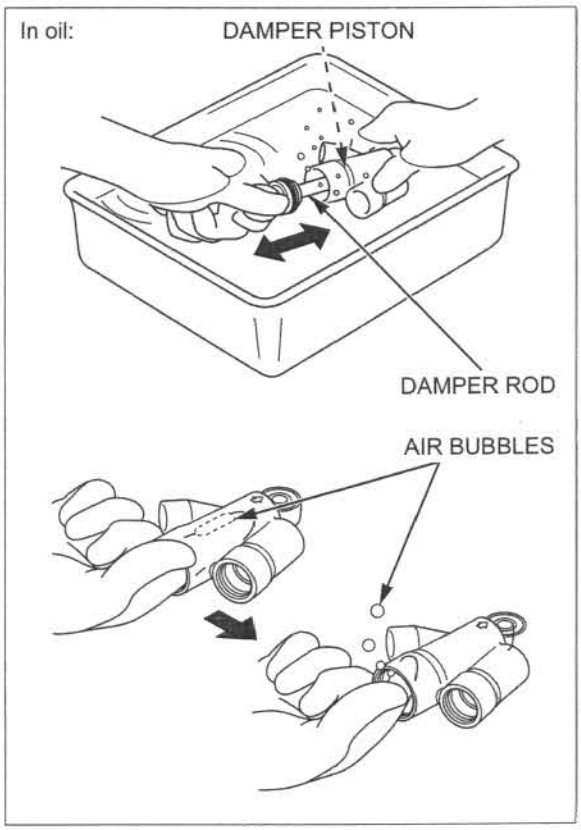

Keep the damper case submerged in oil.

Install the snap ring to the damper case groove.

- Be careful not to damage or deform the snap ring.
- Be certain the snap ring is firmly seated in the groove.

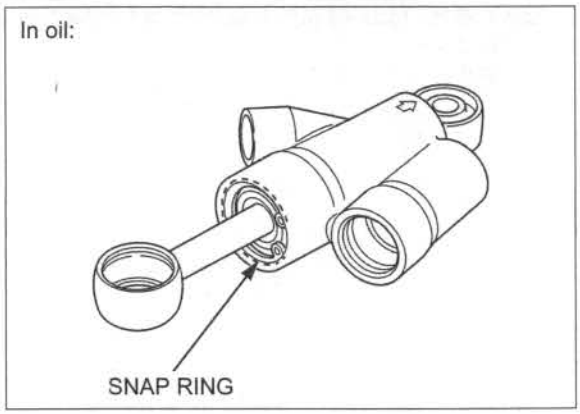

Fully extend the damper rod.

Bleed any trapped air at the O-ring seating surface by turning the O-ring.

Install a new O-ring to the free piston.

Install and push the free piston fully into the damper case while holding the damper rod at maximum length.

- Check that the free piston is fully seated to the damper case.

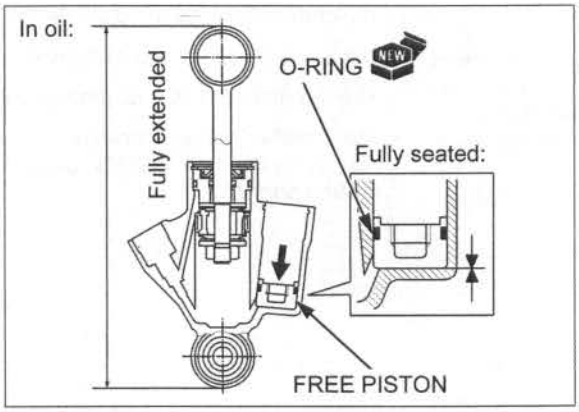

Keep the damper assy submerged in oil.

Install the adjuster piece into the threads of the damper case and thread it one turn.

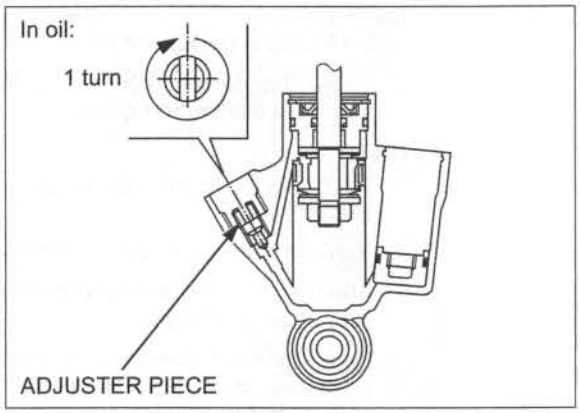

Check that the damper rod is fully extended to its maximum length.

Bleed any trapped air at the O-ring seating surface by turning the O-ring.

Install a new O-ring to the plug bolt.

Make sure the adjuster knob moves freely before tightening the plug bolt.

Install and tighten the plug bolt securely.

NOTE:

Oil is displaced as the adjuster piece and plug bolt are installed into the damper case. The displaced oil causes the free piston to move slightly as shown in the illustration.

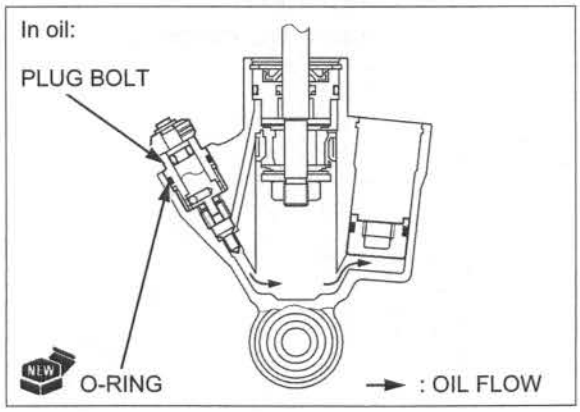

Remove the steering damper from the oil.
Drain the damper oil from the sub tank.

Gauge the depth between the spring seating surface of the free piston and surface of the damper case using the special tool as shown.

TOOL:
Depth gauge **07AMJ-MENA100**

Before using the tool, make sure that the shouldered end of the probe is extending from the collar side of the depth gauge.

Insert the collar of the depth gauge into the sub tank. Loosen the thumb screw and lower the shouldered end of the probe until it stops.
Tighten the thumb screw and remove the tool.

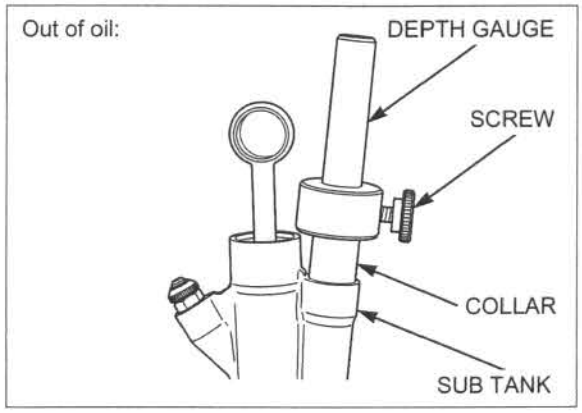

Measure the depth of the free piston with a caliper by measuring the distance between the end of the probe and the collar.

STANDARD:
27.3 – 27.9 mm (1.07 – 1.10 in)
at oil temperature 20°C (68°F)

Measure the oil temperature.

If measured temperature is other than 20°C (68°F), refer to the oil chart (page 14-47).

If the measured depth is other than the standard length, disassemble the steering damper and start over.

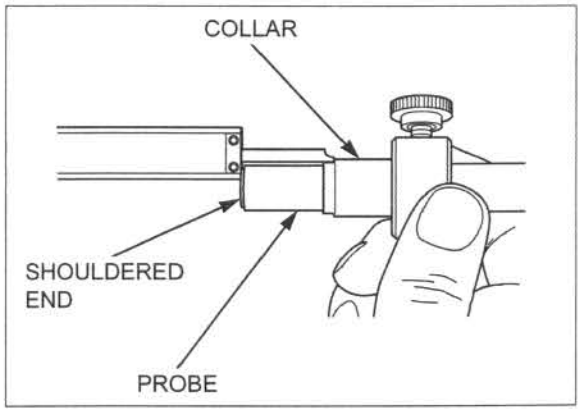

The depth of the free piston will change according to the oil temperature as shown.

unit: mm (in)

		Depth		
		Max.	Standard	Min.
°C/°F	0/32	28.8 (1.13)	28.5 (1.12)	28.2 (1.11)
	10/50	28.3 (1.11)	28.0 (1.10)	27.7 (1.09)
	20/68	27.9 (1.10)	27.6 (1.09)	27.3 (1.07)
	30/86	27.5 (1.08)	27.2 (1.07)	26.9 (1.06)
	40/104	27.0 (1.06)	26.7 (1.05)	26.4 (1.04)
	50/122	26.6 (1.05)	26.3 (1.04)	26.0 (1.02)

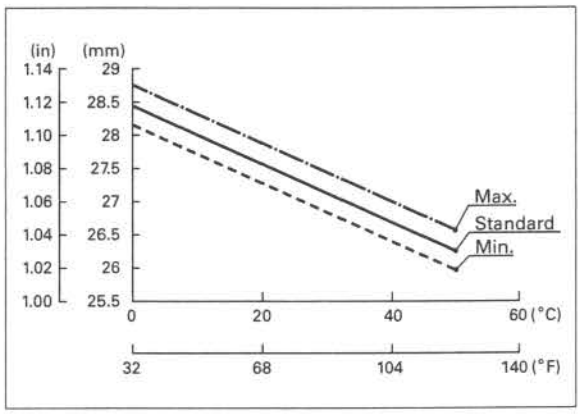

Install the return spring and washer into the damper case.
Apply recommended damper oil (page 14-44) to a new O-ring and install it to the end cap groove.
Install the end cap.

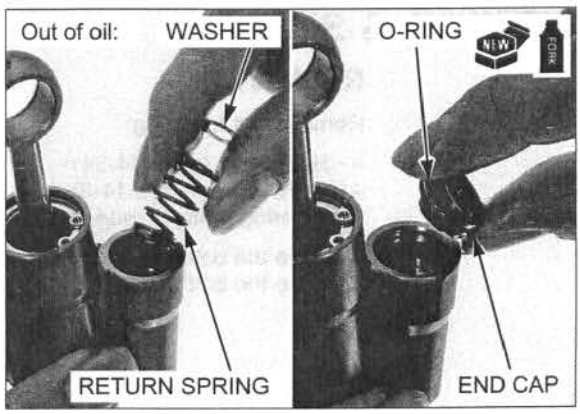

Be certain the snap ring is firmly seated in the groove.

Thread a 4 mm screw to the end cap and install a new snap ring to the damper case while pushing the end cap until the snap ring groove appear.

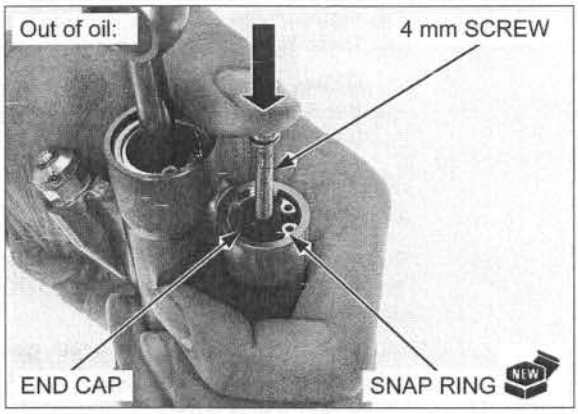

Check the operation of the damper rod, by pumping it slowly; extending and compressing by hand.

Check the following:

- Oil leakage
- Abnormal noise by trapped air

If you hear an abnormal noise, caused by trapped air, reassemble the steering damper.

Install the damper rod side spherical bearing (page 14-40).

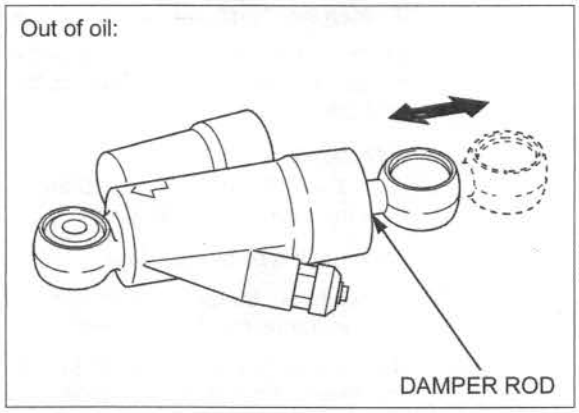

Measure the damper rod length with the inside jaws of a vernier caliper.

Measure the length between the spherical bearings as shown:

STANDARD: Fully compressed damper rod length: 93.55 – 94.35 mm (3.683 – 3.715 in)
Fully extended damper rod length: 117.55 – 118.35 mm (4.628 – 4.659 in)

If the measured lengths are outside the standard length, disassemble the steering damper and start over.

NOTE:
The HPSD will not work correctly if the fully compressed damper rod length is more than standard.

Return the damping force adjuster to its original position, for standard position (page 14-3).
Install the steering damper (page 14-39).

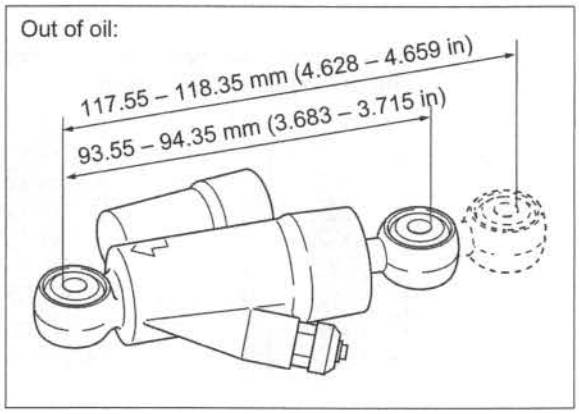

STEERING STEM

REMOVAL

Remove the following:

- Handlebar (page 14-34)
- Front wheel (page 14-8)
- Steering damper (page 14-39)

Remove the bolts, washers, collars and front fender.
Remove the bolt and brake hose guide.

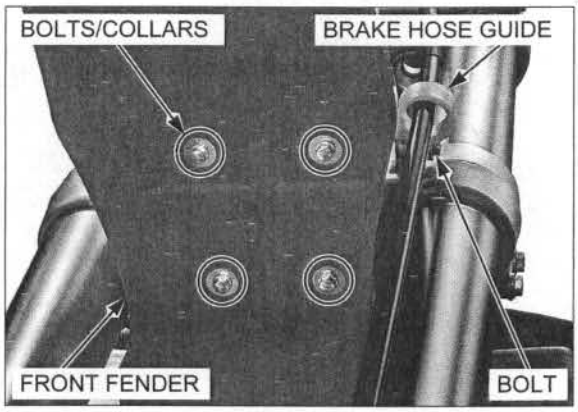

Remove the fuel tank breather hose from the steering stem.
Remove the steering stem nut and washer.

Remove the fork legs (page 14-14).

Remove the fork top bridge.

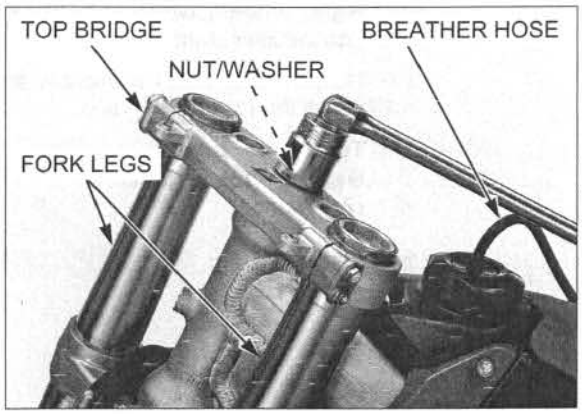

Remove the steering stem adjusting nut using the special tool.

TOOL:

Steering stem socket	**07916-3710101 or 07702-0020001 (U.S.A. only)**

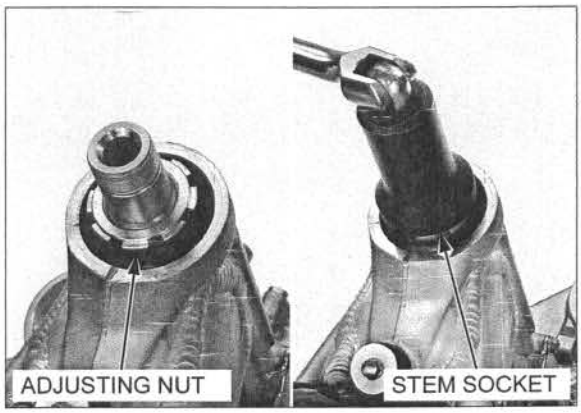

Remove the upper dust seal, upper tapered roller bearing and steering stem.

Check the bearings and outer races for wear or damage.

Replace the bearings and outer races as a set, if necessary (page 14-49).

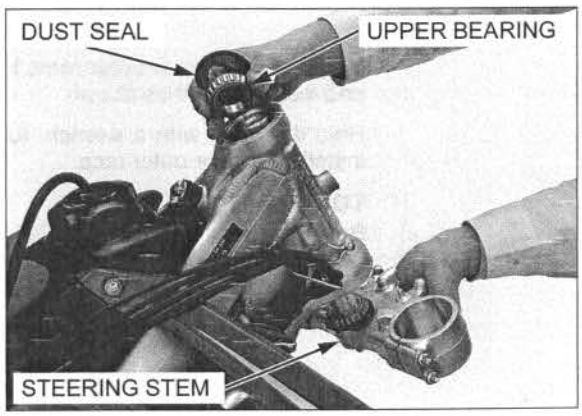

BEARING REPLACEMENT

Always replace the bearings and outer races as a set.

Remove the upper and lower outer races from the head pipe using the special tools.

TOOLS:

Remover weight	**07741-0010201**
Ball race remover shaft	**07JAC-PH80200**
Adjustable Bearing Puller, 45-75mm	**07YAC-0010102**
Adapter, 8mm x 3/8 x 16 in	**07YAC-001A200 and Commercially available slide hammer, 3/8 x 16**

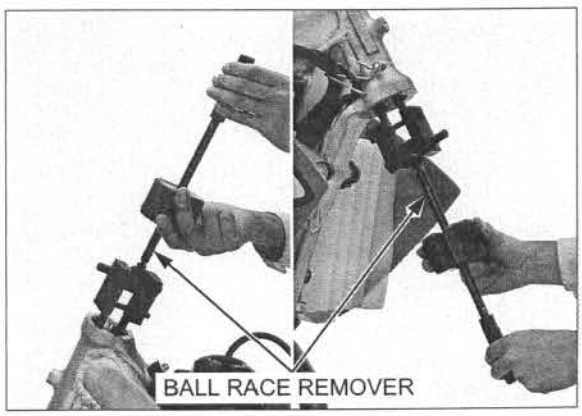

Install a new lower outer race, bearing race installers, and installer shaft as shown.

Hold the shaft with a wrench, and turn the installer to install the lower outer race.

TOOLS:

Bearing race installer (2 required)	**070MF-MEN0100 or 070MF-MENA100 (U.S.A. only)**
Installer shaft	**07VMF-KZ30200**

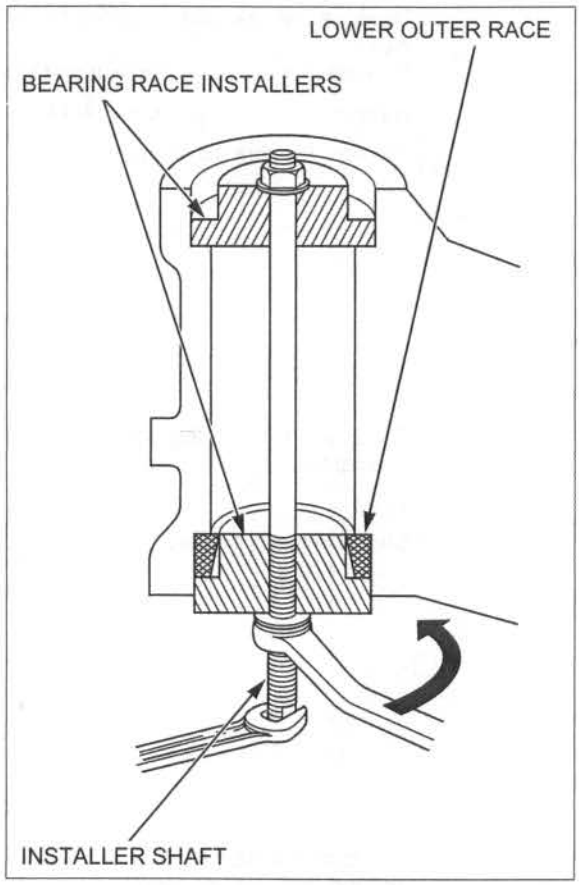

Install a new upper outer race, bearing race installers, and installer shaft as shown.

Hold the shaft with a wrench, and turn the installer to install the upper outer race.

TOOLS:

Bearing race installer (2 required)	**070MF-MEN0100 or 070MF-MENA100 (U.S.A. only)**
Installer shaft	**07VMF-KZ30200**

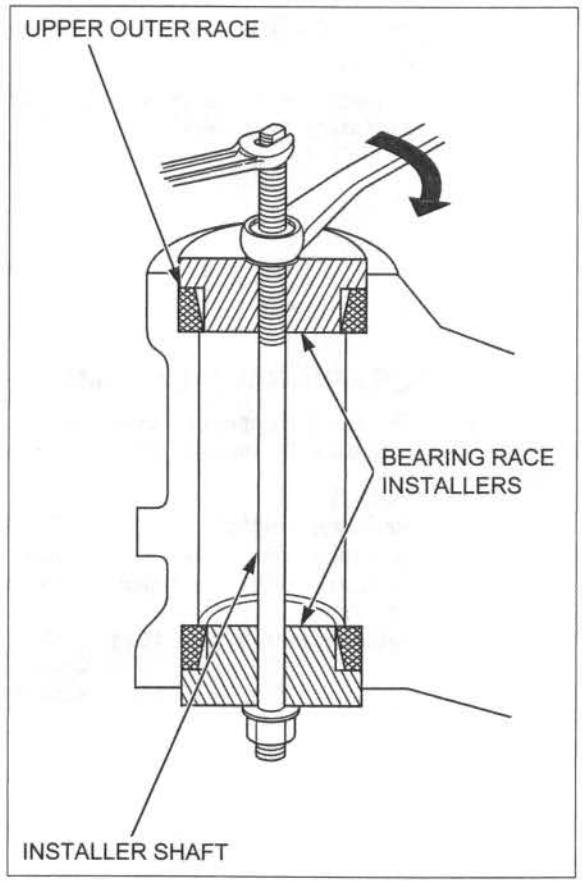

Temporarily install the steering stem nut onto the stem to prevent the threads from being damaged when removing the lower tapered roller bearing from the steering stem.

Remove the lower tapered roller bearing with a chisel or equivalent tools, being careful not to damage the steering stem.
Remove the dust seal.

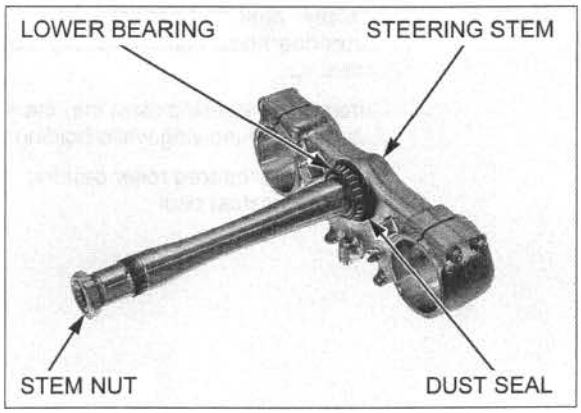

Apply specified grease (page 1-17) to the lips of a new dust seal, and install it over the steering stem.

Install a new lower tapered roller bearing using a hydraulic press and the special tool as shown.

TOOL:
Base collar, 31 mm I.D. **07GAJ-PG20120**

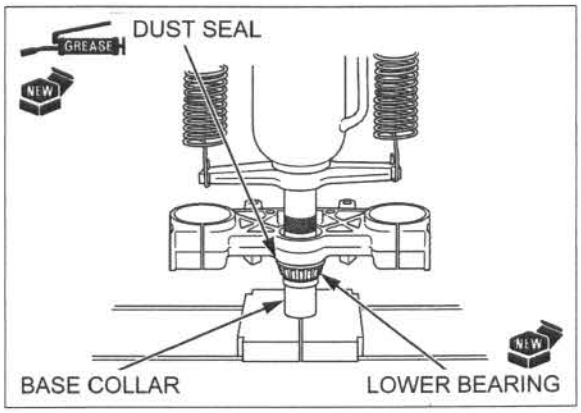

INSTALLATION

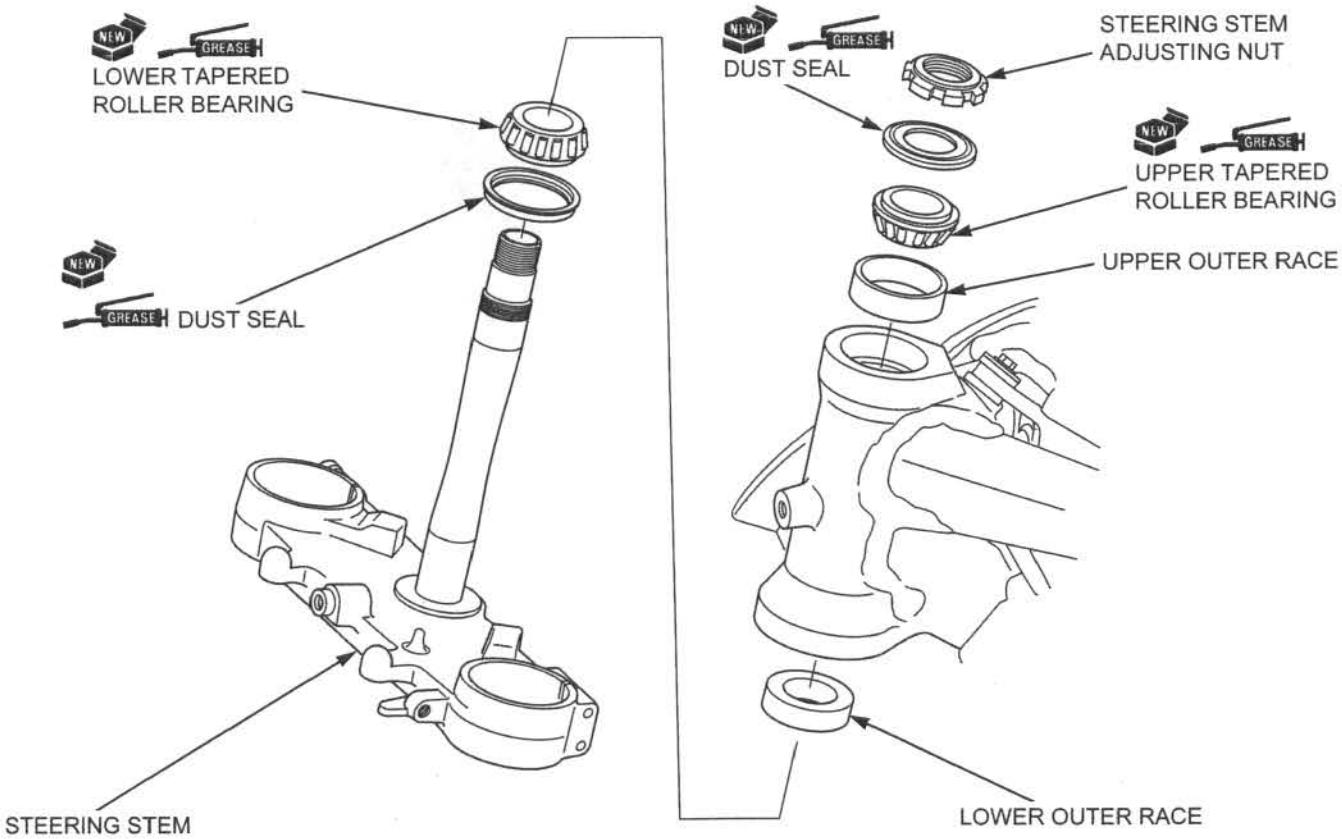

Apply specified grease (page 1-17) to each new steering head bearing rolling area and new upper dust seal lip.

Insert the steering stem into the steering head pipe and install the following while holding the stem:

- Upper tapered roller bearing
- Upper dust seal

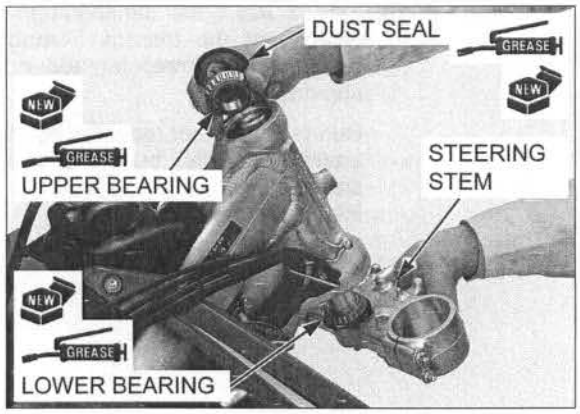

Install the steering stem adjusting nut.

Tighten the steering stem adjusting nut to the specified torque using the special tool while holding the steering stem.

TORQUE: 29.5 N·m (3.1 kgf·m, 22 lbf·ft)

TOOL:

Steering stem socket	**07916-3710101 or 07702-0020001 (U.S.A. only)**

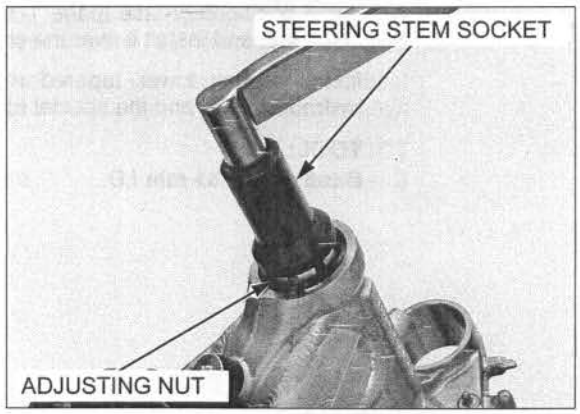

Move the steering stem lock-to-lock several times to seat the bearings.

Loosen the steering stem adjusting nut fully.

Retighten the steering stem adjusting nut to the specified torque using the special tool while holding the steering stem.

TORQUE: 7.0 N·m (0.7 kgf·m, 5.2 lbf·ft)

TOOL:

Steering stem socket	**07916-3710101 or 07702-0020001 (U.S.A. only)**

Recheck that the steering stem moves smoothly without play or binding.

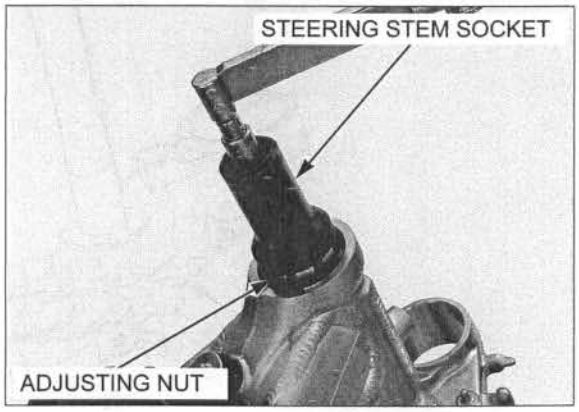

Install the following:

- Fork top bridge
- Fork legs (page 14-31)
- Washer and steering stem nut

Tighten the steering stem nut to the specified torque.

TORQUE: 108 N·m (11.0 kgf·m, 80 lbf·ft)

Recheck the steering stem adjustment before installing the removed parts.

Install the remaining removed parts in the reverse order of removal.

TORQUE:
Front brake hose guide bolt:
5.2 N·m (0.5 kgf·m, 3.8 lbf·ft)

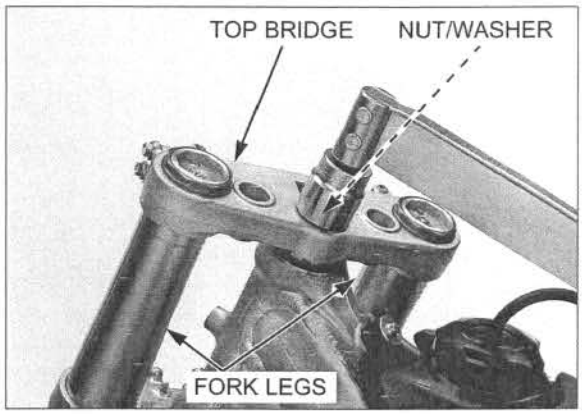

CLUTCH LEVER

REMOVAL/INSTALLATION

Release the clutch lever cover.
Remove the clutch lever pivot nut and bolt.
Remove the clutch lever by releasing the clutch cable.

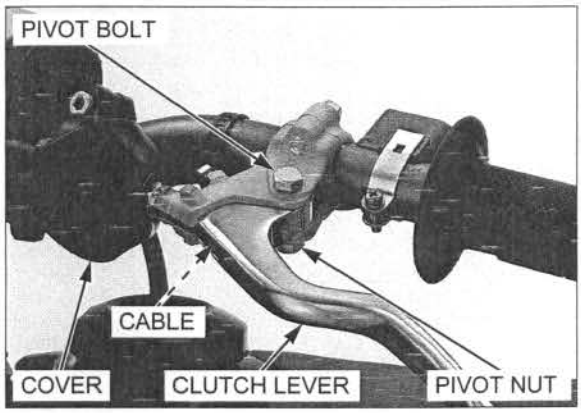

Connect the clutch cable to the clutch lever.

Install the clutch lever to the clutch lever bracket.

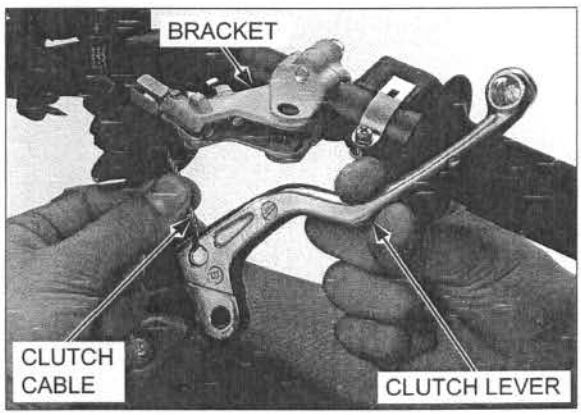

Apply grease to the clutch lever pivot bolt sliding surface.

Install and tighten the clutch lever pivot bolt to the specified torque.

TORQUE: 2.0 N·m (0.2 kgf·m, 1.5 lbf·ft)

Loosen the clutch lever pivot bolt to 45° – 90°.

Install and tighten the clutch lever pivot nut to the specified torque while holding the clutch lever pivot bolt.

TORQUE: 10 N·m (1.0 kgf·m, 7 lbf·ft)

Adjust the clutch lever freeplay (page 4-27).

Reinstall the clutch lever cover.

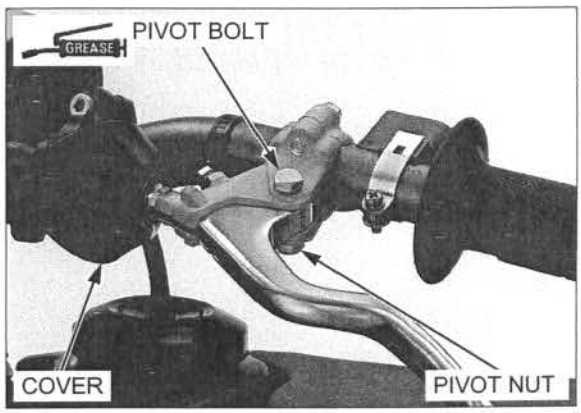

MEMO

15. REAR WHEEL/SUSPENSION

COMPONENT LOCATION

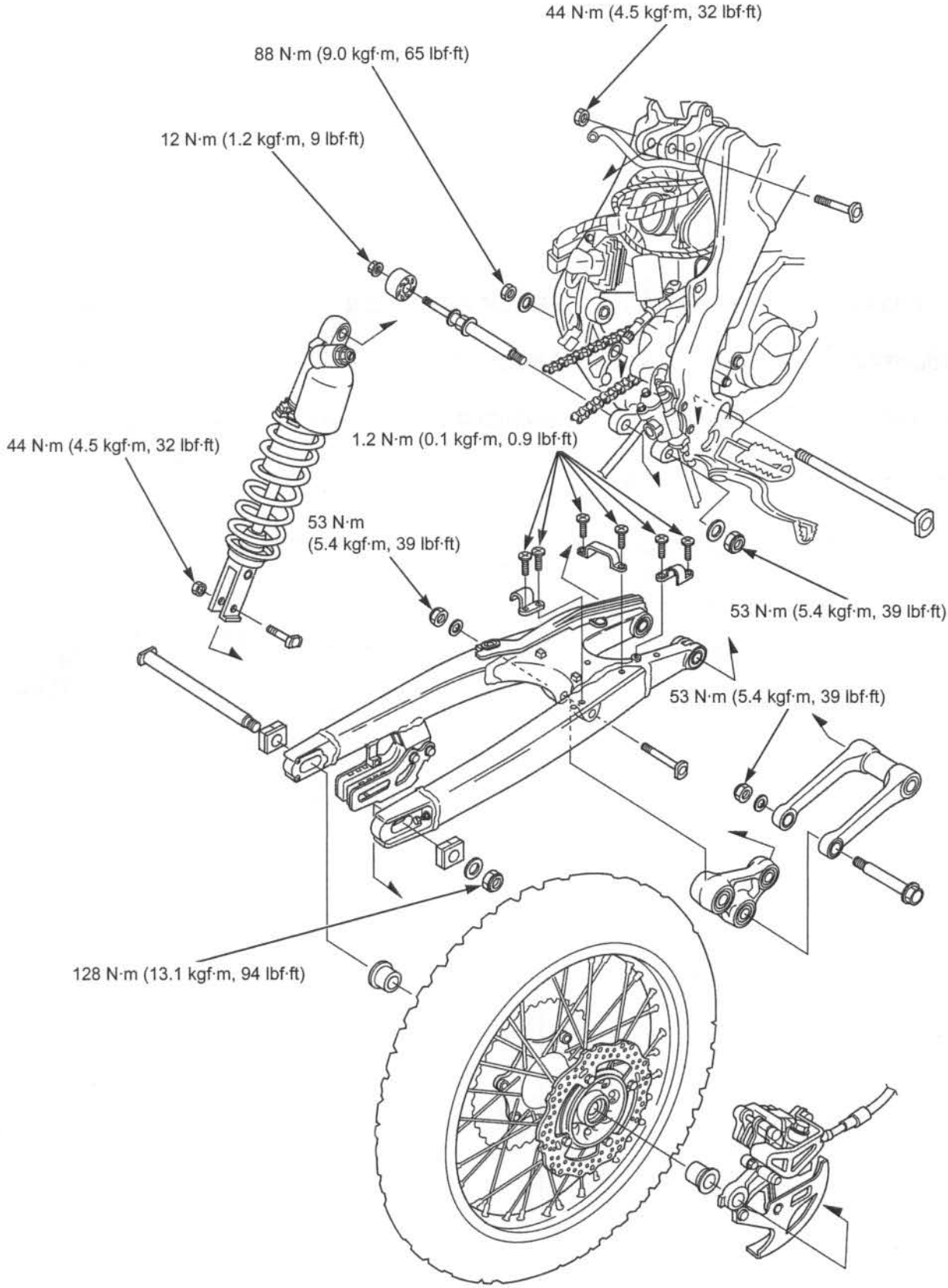

SERVICE INFORMATION

GENERAL

- The shock absorber contains nitrogen under high pressure. Do not allow fire or heat near the shock absorber.
- A contaminated brake disc or pad reduces stopping power. Discard contaminated pads and clean a contaminated disc with a high quality brake degreasing agent.
- When servicing the rear wheel, support the motorcycle using a safety stand or hoist.
- For optimum suspension performance and linkage component service life, the swingarm and shock linkage pivot bearing (along with related seals and bushings) should be disassembled, cleaned, inspected for wear and lubricated with multi-purpose grease NLGI No.2 (molybdenum disulfide additive) every 3 races or 7.5 hours of operation.
- Optional rear wheel sprockets, drive chain, shock springs and pin spanners are available. For optional parts (page 1-31).
- For brake system information (page 16-4).
- Use genuine Honda replacement bolts and nuts for all suspension pivot and mounting points.
- After the rear wheel installation, check the brake operation by applying the brake pedal.

SPECIFICATIONS

Unit: mm (in)

ITEM			STANDARD	SERVICE LIMIT
Cold tire pressure			100 kPa (1.0 kgf/cm^2, 15 psi)	–
Axle shaft runout			–	0.2 (0.01)
Wheel rim runout	Radial		–	2.0 (0.08)
	Axial		–	2.0 (0.08)
Wheel hub-to-rim distance			See page 14-11	–
Drive chain	Size/link	DID	DID 520DMA4/116RB	–
		RK	RK 520TXZ/116RJ	–
	Slack		30 – 40 (1.2 – 1.6)	–
Drive chain length at 17 pins (16 pitches)			–	259 (10.2)
Drive chain slider thickness			–	5 (0.2)
Drive chain roller O.D.			–	35 (1.4)
Shock absorber	Damper gas pressure		1 MPa (10.2 kg/cm^2, 145 psi)	–
	Damper compressed gas		Nitrogen gas	–
	Recommended shock oil	KYB	KHV10-K2C	–
	Damper rod compressed force at 12 mm compressed		180 – 220 N (18.4 – 22.4 kgf, 40.6 – 49.4 lbf)	–
	Spring installed length (standard)		249.5 (9.82)	–
	Oil capacity		420 cm^3 (14.2 US oz, 14.8 Imp oz)	–
High speed compression damping adjuster standard position		'09	1 – 1-1/3 turns out from full in	–
		After '09	1-1/12 – 1-5/12 turns out from full in	–
Low speed compression damping adjuster standard position			11 – 15 clicks out from full in	–
Rebound damping adjuster standard position		'09	13 – 17 clicks out from full in	–
		After '09	11 – 15 clicks out from full in	–

TORQUE VALUES

Rear axle nut		128 N·m (13.1 kgf·m, 94 lbf·ft)	U-nut
Driven sprocket nut		32 N·m (3.3 kgf·m, 24 lbf·ft)	U-nut
Rear bake disc nut		16 N·m (1.6 kgf·m, 12 lbf·ft)	U-nut
Rear wheel bearing retainer		44 N·m (4.5 kgf·m, 32 lbf·ft)	
Shock absorber upper mounting nut		44 N·m (4.5 kgf·m, 32 lbf·ft)	U-nut
Shock absorber lower mounting nut		44 N·m (4.5 kgf·m, 32 lbf·ft)	U-nut
Shock absorber damper rod end nut		26 N·m (2.7 kgf·m, 19 lbf·ft)	Stake
Shock absorber compression damping adjuster		30 N·m (3.1 kgf·m, 22 lbf·ft)	
Shock absorber spring adjuster lock nut		28 N·m (2.9 kgf·m, 21 lbf·ft)	
Drive chain lower roller nut		12 N·m (1.2 kgf·m, 9 lbf·ft)	U-nut
Shock arm nut	(swingarm side)	53 N·m (5.4 kgf·m, 39 lbf·ft)	Apply molybdenum oil solution to the threads and seating surface, U-nut
	(shock link side)	53 N·m (5.4 kgf·m, 39 lbf·ft)	Apply molybdenum oil solution to the threads and seating surface, U-nut
Shock link nut	(frame side)	53 N·m (5.4 kgf·m, 39 lbf·ft)	Apply molybdenum oil solution to the threads and seating surface, U-nut
Swingarm pivot nut		88 N·m (9.0 kgf·m, 65 lbf·ft)	U-nut
Drive chain guide mounting bolt/nut		12 N·m (1.2 kgf·m, 9 lbf·ft)	U-nut
Drive chain slider screw		4.2 N·m (0.4 kgf·m, 3.1 lbf·ft)	Apply locking agent to the threads
Rear brake hose guide screw		1.2 N·m (0.1 kgf·m, 0.9 lbf·ft)	
Drive chain adjuster lock nut		27 N·m (2.8 kgf·m, 20 lbf·ft)	

TOOLS

Slider guide, 16 mm 07PMG-KZ40100  not available in U.S.A.	Driver 07949-3710001 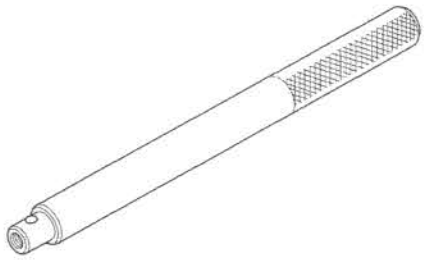	Driver 07749-0010000 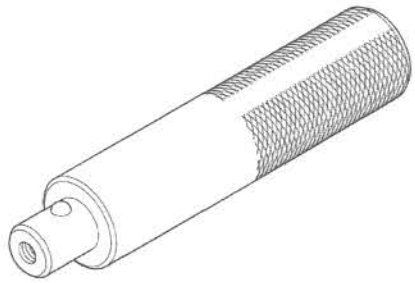
Attachment, 28 x 30 mm 07946-1870100 	Attachment, 40 x 42 mm 07746-0010900 	Attachment, 24 x 26 mm 07746-0010700 
Pilot, 19 mm 07746-0041400 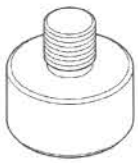	Pilot, 20 mm 07746-0040500 	Pilot, 22 mm 07746-0041000 
Pilot, 25 mm 07746-0040600 	Bearing remover head, 25 mm 07746-0050800 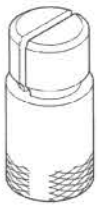	Bearing remover shaft 07GGD-0010100 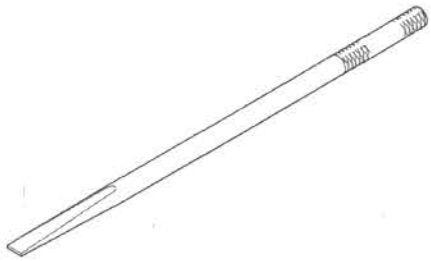

Retainer wrench, 48 mm 07YMA-KZ40100 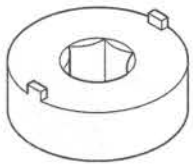 or 07HMA-KS70100 (U.S.A. only)	Retainer wrench body 07710-0010401 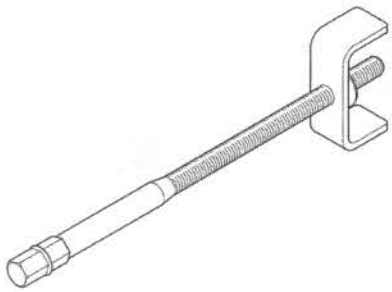	Pin spanner (2 required) 07702-0020001 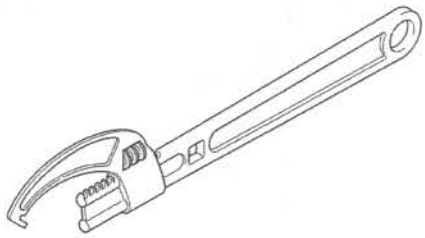 or Pin spanner A 89201-KS6-810 (2 required)
Piston ring guide attachment 070MG-KZ30100 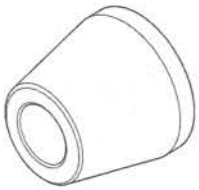 not available in U.S.A.	Collar, 23 x 17 mm 07GMD-KT8A110 (U.S.A. only) 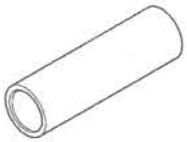	Attachment, 30 mm I.D. 07746-0030300 

TROUBLESHOOTING

Soft suspension
- Weak shock absorber springs
- Incorrect suspension adjustment
- Shock oil leakage from damper unit
- Insufficient tire pressure

Stiff suspension
- Damaged shock absorber mounting bearing
- Bent damper rod
- Damaged swingarm pivot bearings
- Damaged suspension linkage bearings
- Bent swingarm pivot
- Incorrect suspension adjustment
- Insufficient tire pressure

Steers to one side or does not track straight
- Bent axle shaft
- Axle alignment/chain adjustment not equal on both sides

Rear wheel wobbling
- Bent rim
- Worn wheel bearings
- Bent spokes
- Unbalanced tire and wheel
- Faulty tire
- Insufficient tire pressure
- Faulty swingarm pivot bearings
- Loose axle nut
- Loose suspension fasteners

Rear wheel turns hard
- Faulty wheel bearings
- Bent axle shaft
- Brake drag (page 16-6)
- Drive chain too tight (page 4-22)

Rear suspension noise
- Faulty shock absorber
- Loose suspension fasteners

REAR WHEEL

REMOVAL

Raise the rear wheel off the ground by placing a workstand or equivalent under the engine.

Fully slacken the drive chain (page 4-22).

Remove the axle nut and washer.

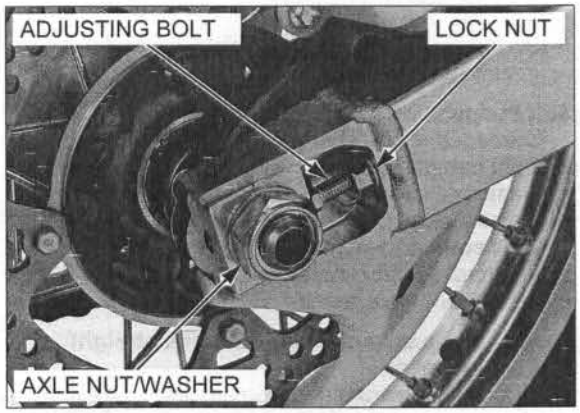

Push the rear wheel forward to derail the drive chain from the driven sprocket.

Do not operate the brake pedal after removing the rear wheel.

Remove the axle shaft, adjusting blocks and rear wheel.

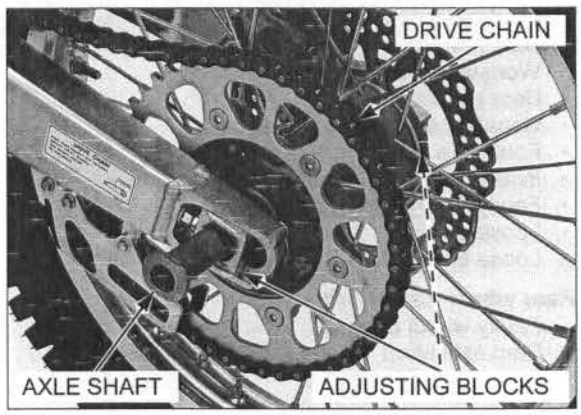

INSPECTION

AXLE SHAFT RUNOUT

Set the axle shaft on V-blocks and measure the runout. Turn the axle shaft and measure the runout using a dial indicator.

Actual runout is 1/2 of the total indicator reading.

SERVICE LIMIT: 0.2 mm (0.01 in)

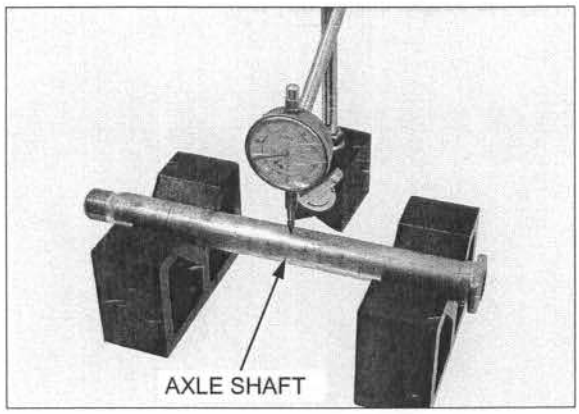

WHEEL BEARING

Turn the inner race of each wheel bearing with your finger.
The bearings should turn smoothly and quietly. Also check that the bearing outer race fits tightly in the wheel hub.

Replace the wheel bearings as a set.

Replace the wheel bearing if necessary (page 15-9).

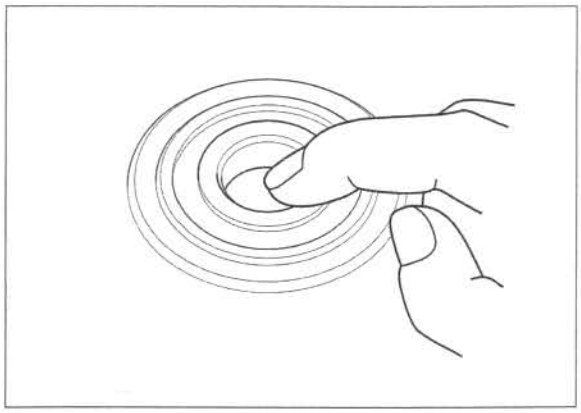

WHEEL RIM RUNOUT

Check the rim runout by placing the wheel on a truing stand.
Spin the wheel by hand, and read the runout using a dial indicator.

Actual runout is 1/2 of the indicator reading.

SERVICE LIMITS:
Radial: 2.0 mm (0.08 in)
Axial: 2.0 mm (0.08 in)

Check the spokes and tighten any that are loose.

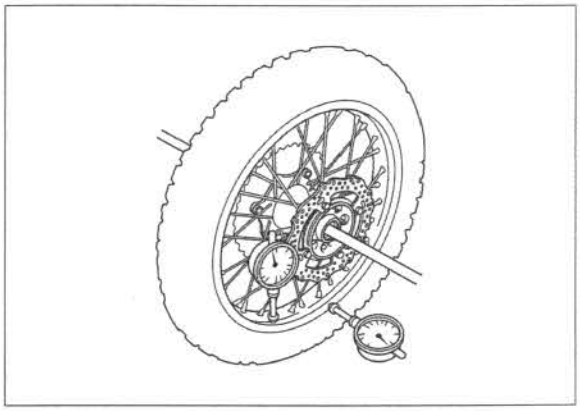

DISASSEMBLY

Remove the right and left side collars.

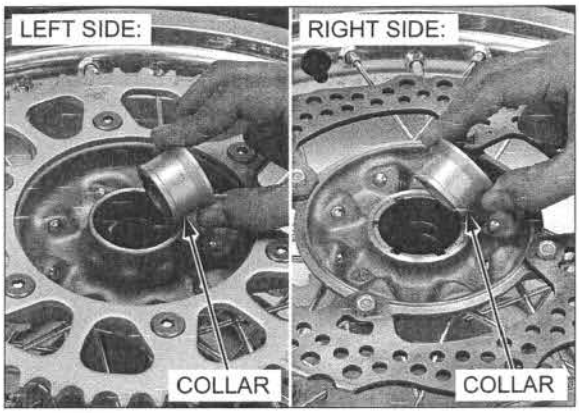

Remove the following:

- Brake disc bolts and nuts
- Brake disc
- Dust seal

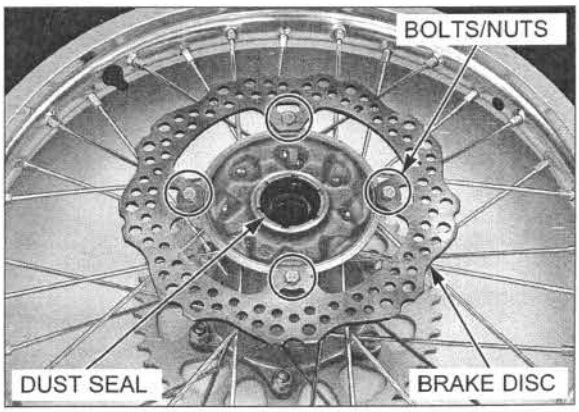

Remove the following:

- Dust seal
- Driven sprocket bolts, nuts and washers
- Driven sprocket

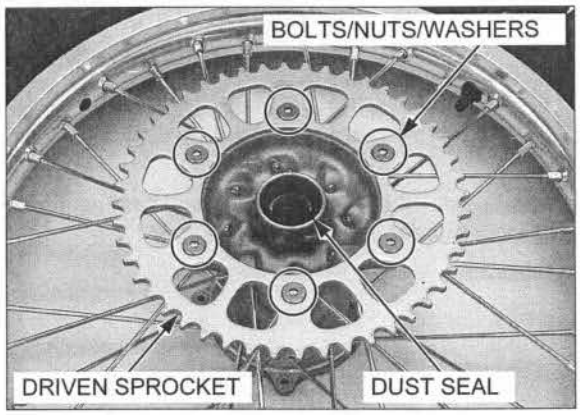

Remove the bearing retainer using the special tools.

TOOLS:

Retainer wrench, 48 mm	**07YMA-KZ40100 or 07HMA-KS70100 (U.S.A. only)**
Retainer wrench body	**07710-0010401**

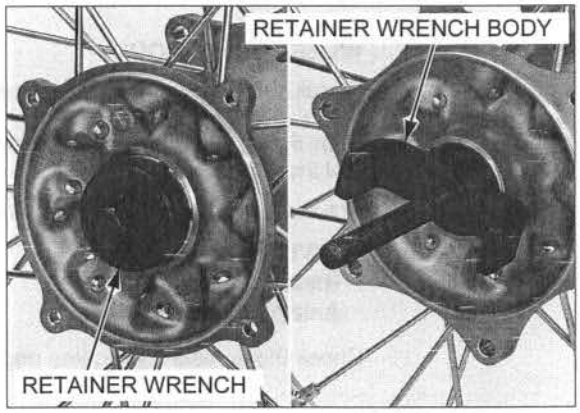

Replace the wheel bearings as a set. Do not reuse old bearing.

Install the remover head into the bearing.
From the opposite side, install the remover shaft and drive the bearing out of the wheel hub.
Remove the distance collar and drive out the other bearings.

TOOLS:

Bearing remover head, 25 mm	**07746-0050800**
Bearing remover shaft	**07GGD-0010100**

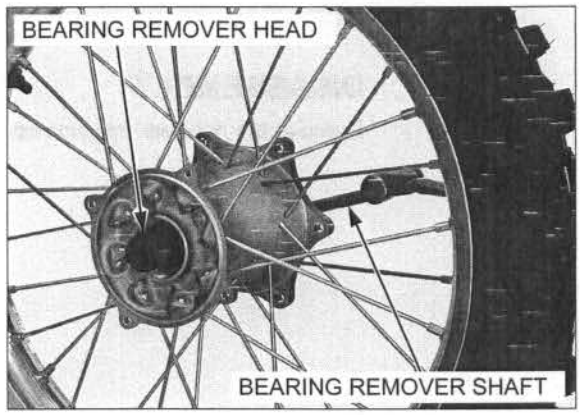

ASSEMBLY

44 N·m
(4.5 kgf·m, 32 lbf·ft)
NEW

NEW RIGHT WHEEL
BEARING (69052RS)

BRAKE DISC BOLT

16 N·m (1.6 kgf·m, 12 lbf·ft)

RIGHT DUST SEAL
NEW GREASE

32 N·m (3.3 kgf·m, 24 lbf·ft)

DISTANCE COLLAR

12 N·m (1.2 kgf·m, 9 lbf·ft)

DRIVEN SPROCKET

BRAKE DISC

LEFT DUST SEAL
NEW GREASE

GREASE NEW LEFT WHEEL
BEARINGS (6905RS)

Place the rim on a work bench.
Place the hub in the center of the rim, and begin lacing with new spokes.

Adjust the hub position so the distance from the hub left end surface to the side of the rim is
45.5 ± 1.0 mm (1.79 ± 0.04 in) as shown.

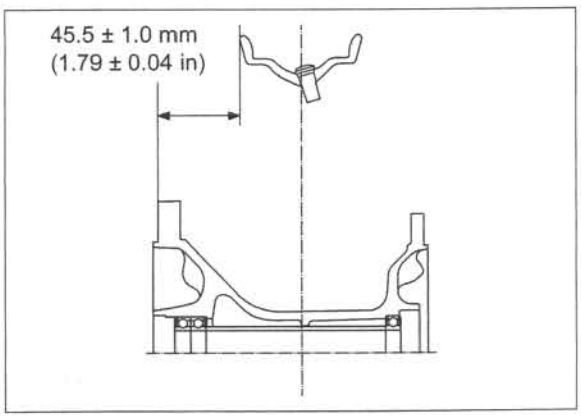

Tighten the spoke in two or three progressive steps (page 4-34).

Install the rim lock, setting rubber, tube and tire.

Tighten the rim lock (page 4-34).

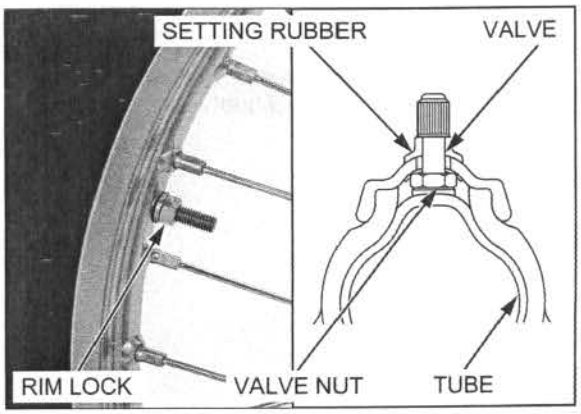

Replace the wheel bearings as a set. Do not reused old bearing.

Pack each wheel bearing cavity with grease.

Drive in a new right wheel bearing first making sure that it is fully seated and that the marked side facing out.

TOOLS:

Driver	**07749-0010000**
Attachment, 40 x 42 mm	**07746-0010900**
Pilot, 25 mm	**07746-0040600**

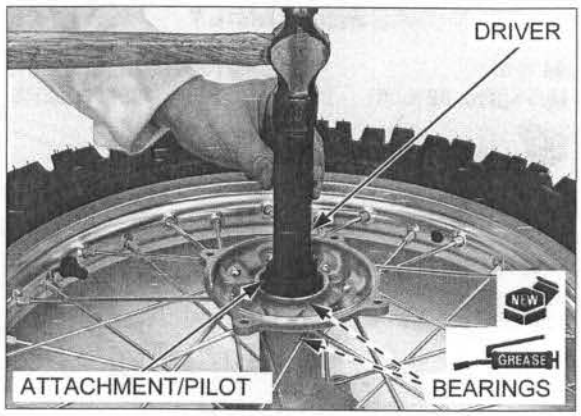

Install the distance collar into place, then drive new left wheel bearings using the same tools.

- Drive the inside left wheel bearing with the sealed side facing down.
- Drive the outside left wheel bearing with the sealed side facing up.

Install and tighten a new bearing retainer to the specified torque using the special tools.

TOOLS:

Retainer wrench, 48 mm	**07YMA-KZ40100 or 07HMA-KS70100 (U.S.A. only)**
Retainer wrench body	**07710-0010401**

TORQUE: 44 N·m (4.5 kgf·m, 32 lbf·ft)

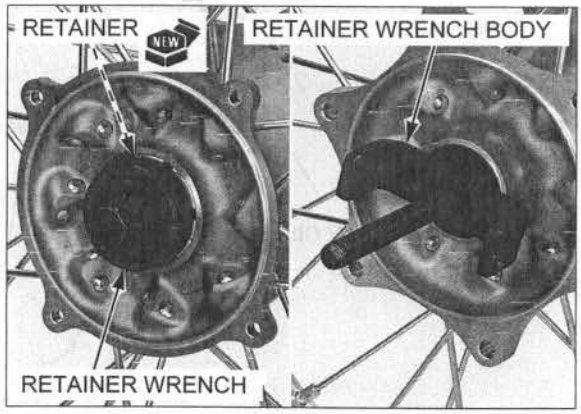

Peen the edge of the retainer.

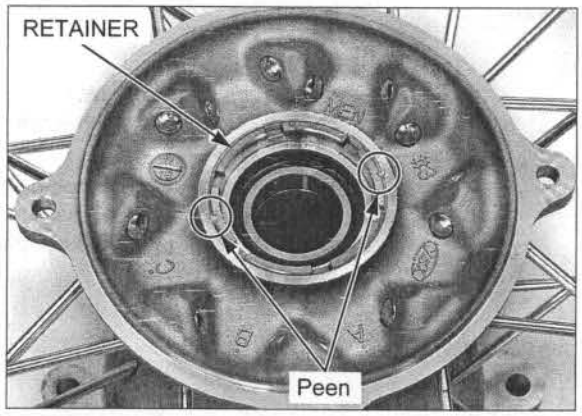

Install the driven sprocket.
Install the bolts, washers and nuts, and tighten the nuts to the specified torque.

TORQUE: 32 N·m (3.3 kgf·m, 24 lbf·ft)

Pack the lips of a new dust seal with grease, and install it to the wheel hub.

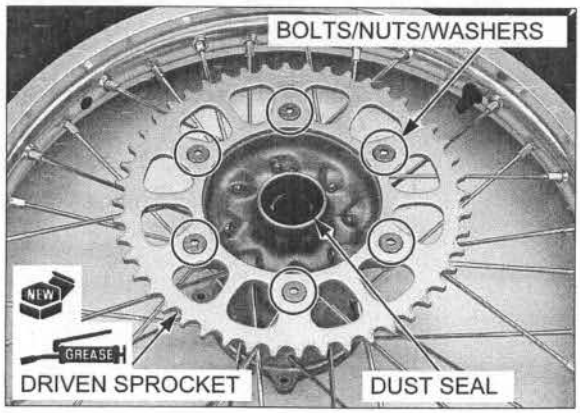

Pack the lips of a new dust seal with grease, and install it to the wheel hub.

Install the brake disc onto the wheel hub with the minimum thickness mark (MIN. TH. 3.5 mm) facing out.
Install the bolts/nuts.
Tighten the nuts to the specified torque.

TORQUE: 16 N·m (1.6 kgf·m, 12 lbf·ft)

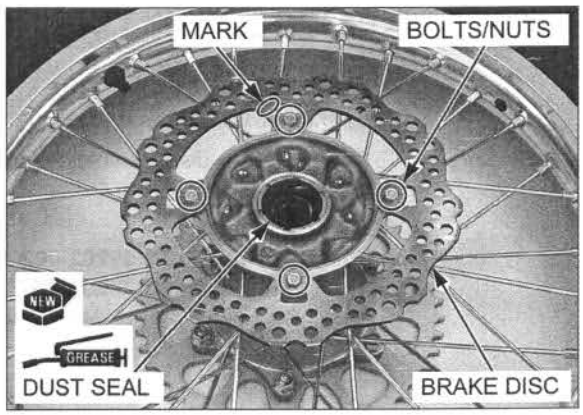

Check the right and left side collars for wear or damage.

Replace them if necessary.

Install the right and left side collars.

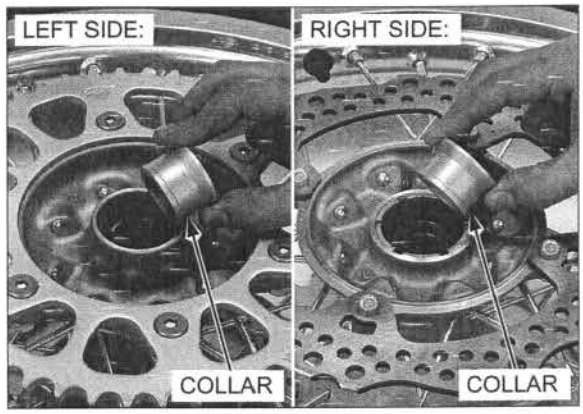

INSTALLATION

Be careful not to damage the brake pads.

Place the rear wheel into the swingarm carefully aligning the brake disc between the brake pads.

Install the drive chain over the driven sprocket.
Apply a thin coat of grease to the axle shaft sliding surface.
Install the adjusting blocks and axle shaft from the left side.

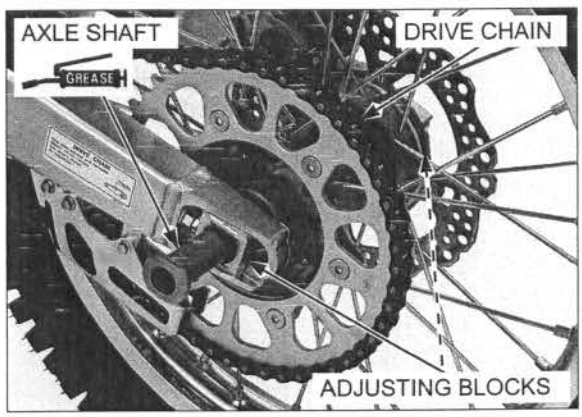

Install the washer and axle nut.

Adjust the drive chain slack (page 4-21).

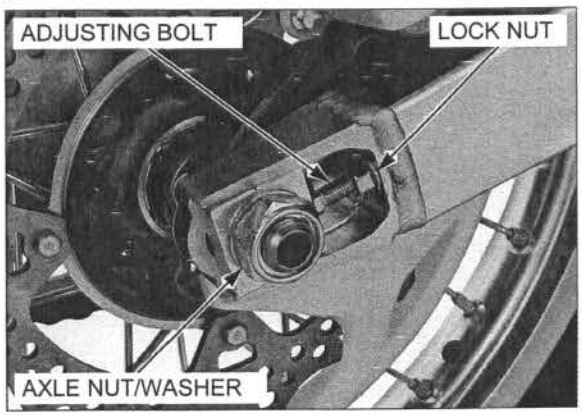

SHOCK ABSORBER

REMOVAL

Remove the sub-frame (page 3-6).

If you plan to disassemble the shock absorber, loosen the spring adjuster lock nut.

TOOLS:

Pin spanner	**07702-0020001 (2 required) or**
Pin spanner A	**89201-KS6-810 (2 required)**

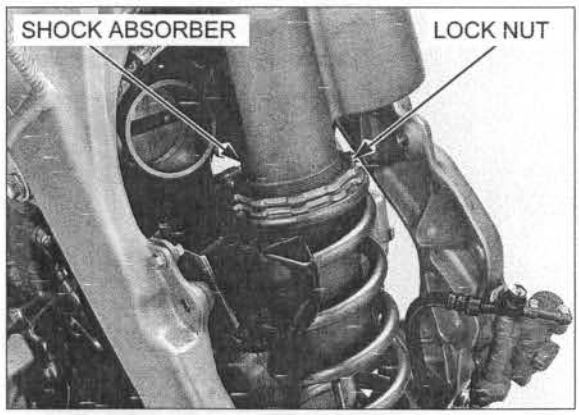

Raise the rear wheel off the ground by placing a workstand or equivalent under the engine.

Remove the upper mounting bolt and nut.

Remove the shock absorber lower mounting bolt, nut and shock absorber.

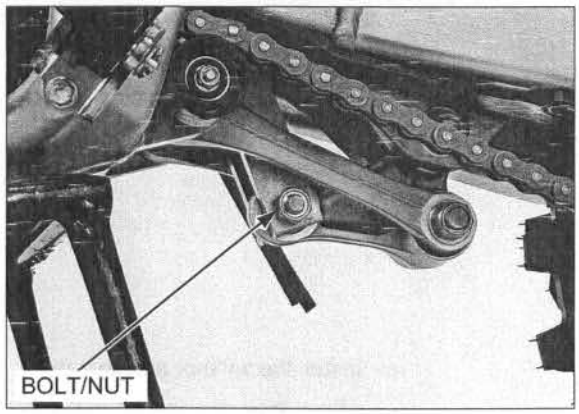

DISASSEMBLY

Turn the rebound and compression (low speed side) damping adjusters counterclockwise to the softest position (be sure to record the number of turns from the starting position).

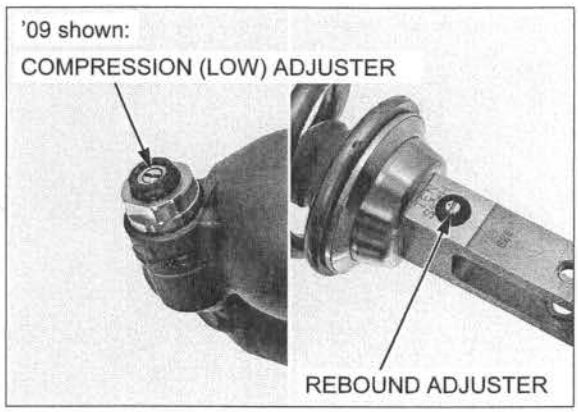

Do not over-tighten the vise. Measure the spring length for reinstallation later.

Set the shock absorber upper mount in a vise with a piece of wood or soft jaws to avoid damage.

Loosen the spring lock nut and spring adjusting nut.

TOOLS:

Pin spanner	**07702-0020001 (2 required) or**
Pin spanner A	**89201-KS6-810 (2 required)**

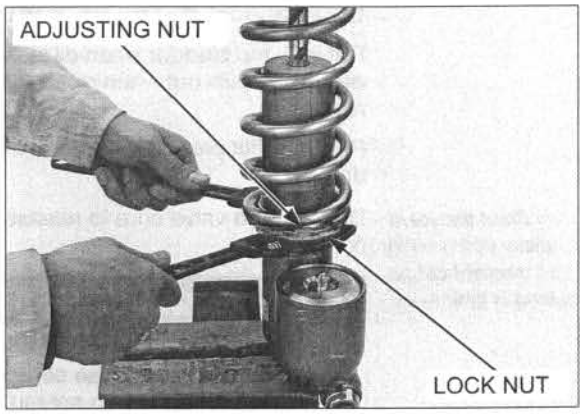

Slide the rubber stopper while it is fully seated to the damper case.

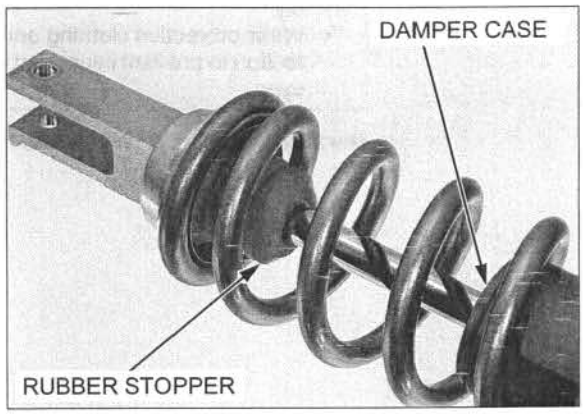

Space the spring seat end gap and shock absorber spring end 180° apart to ease spring seat removal.

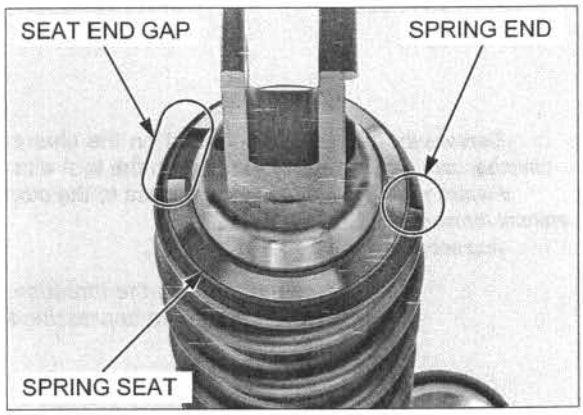

Remove the spring seat while compressing the shock absorber spring.

Remove the spring seat washer and shock absorber spring.

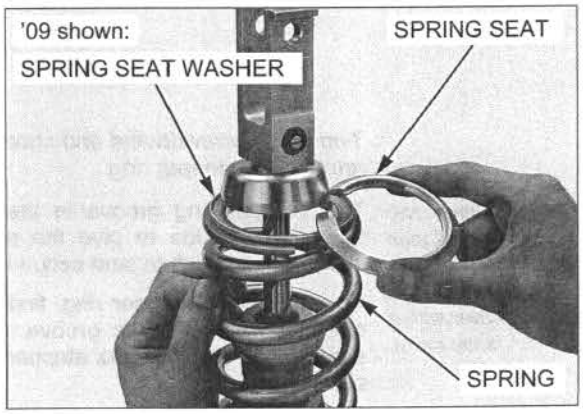

BLADDER REPLACEMENT

Replace the bladder when oil leaks around the chamber cap or oil spills out when releasing the nitrogen from the reservoir.

Perform this procedure before draining the oil from the damper.

Point the valve away from you to prevent debris getting in your eyes.

Depress the valve core to release the nitrogen from the reservoir.

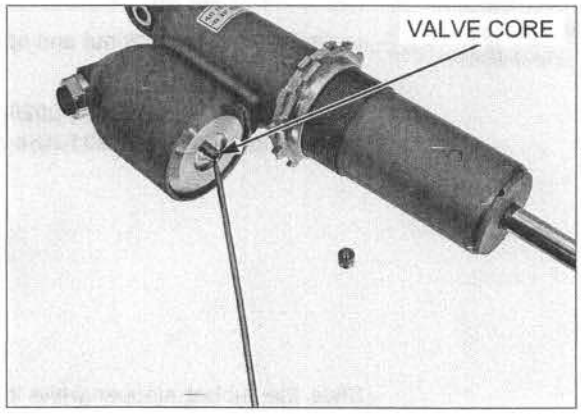

⚠WARNING

- The chamber cap will be under significant pressure and could cause serious injury.
- Release all nitrogen pressure before disassembly.
- Wear protective clothing and adequate eye protection to prevent injury and debris entering your eyes.

Remove the valve core from the chamber cap.

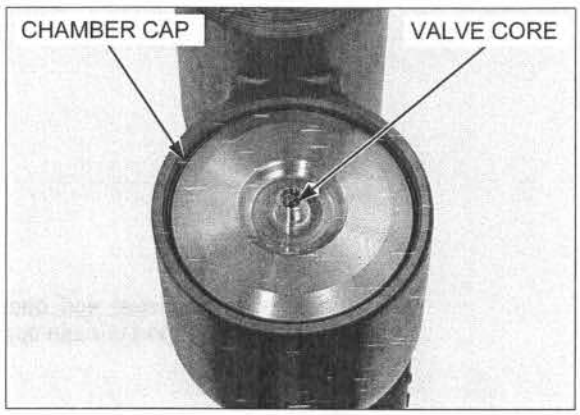

Depress the chamber cap just the minimum amount for stopper ring access.

Put a suitable tool on the chamber cap, and push it in by lightly tapping on the tool with a plastic hammer until you have good access to the stopper ring.

NOTICE

To avoid damaging the threads of the gas valve, install the valve cap before depressing the chamber cap.

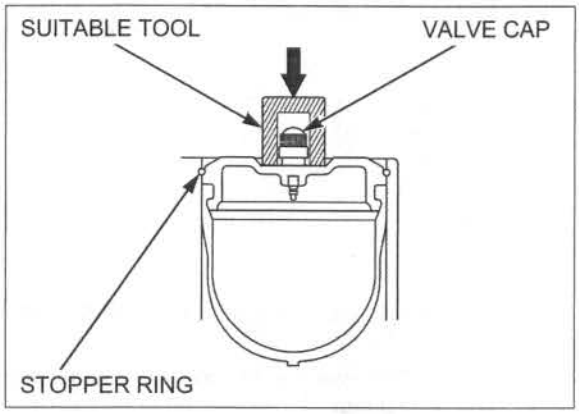

Two small screwdrivers and shop towel are required to remove the stopper ring.

To avoid damaging the inside surfaces of the reservoir, cover the screwdriver with a shop towel.

The stopper ring groove in the reservoir is ramped toward the inside to give the stopper ring a square shoulder on which to seat securely.

To remove the stopper ring, first push one end of the stopper ring out of its groove, then slip the second screwdriver between the stopper ring and reservoir to act as a ramp.

Now, use the other screwdriver to pull the stopper ring completely out.

Check the stopper ring groove for burrs.

Remove any burrs with a fine emery cloth before removing the chamber cap out of the reservoir.

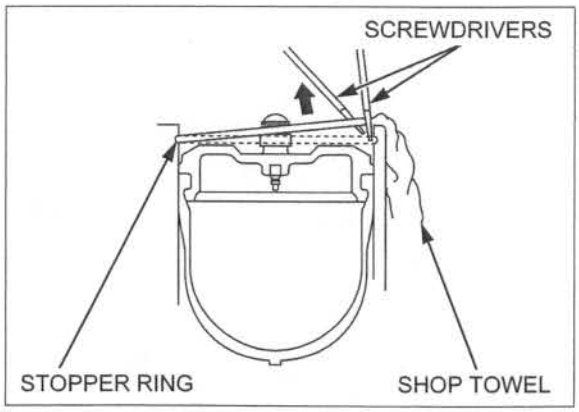

Set the shock absorber upper mount in a vise with a piece of wood or soft jaws to avoid damage.

Using a suitable squeeze bottle, fill the reservoir with the recommended shock oil.

RECOMMENDED SHOCK OIL:
KHV10-K2C (KYB)

Slowly pump the damper rod until no air bubbles appear in the valve core hole, then pull the damper rod all the way out.

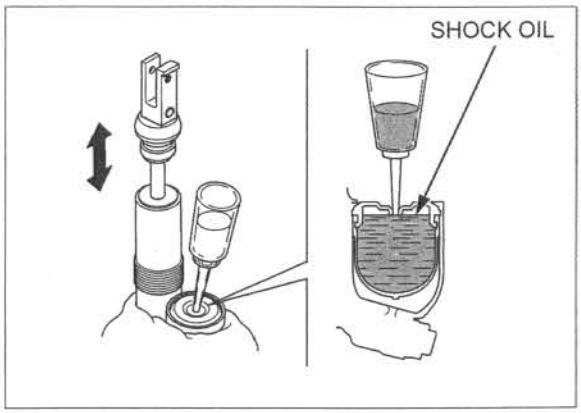

Install the valve core securely.
Wear protective clothing and a face guard to protect your eyes and face in case the chamber cap pops out quickly and forcibly.
Remove the chamber cap and bladder following the procedure below:

- The chamber cap will be removed with hydraulic pressure so its force can be significant considering the air in the bladder.

1. Wrap the shop towel around the chamber cap. Compress the damper rod slowly to force the chamber cap out.

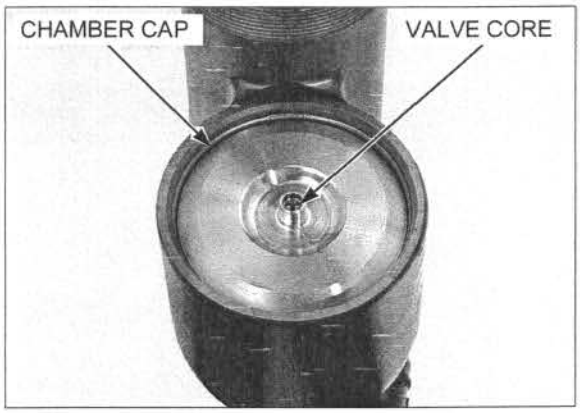

2. Set the damper case in a vise with a piece of wood or soft jaws with the compression damping adjuster facing up.

NOTE:
- Do not over-tighten the vise and distort the damper case.

Remove the compression damping adjuster.

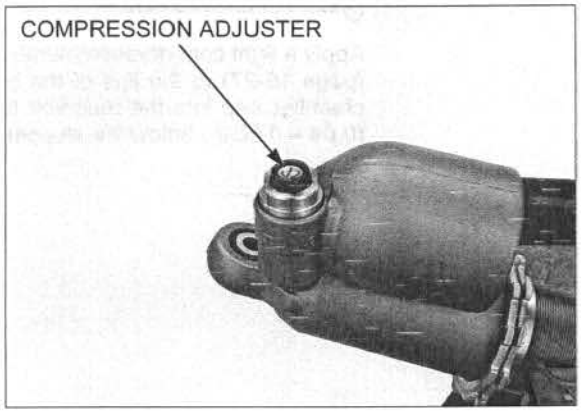

3. Fill the damper case and reservoir with KHV10-K2C (KYB) through the compression damping adjuster hole, while slowly pulling the damper rod out.
4. Reinstall the compression damping adjuster after filling the damper.

NOTE:
- The damper must be kept upright to prevent shock oil from leaking out.

5. Place the damper with the reservoir chamber cap facing up.
6. Repeat steps 1 to 5 until the chamber cap is removed from the reservoir.

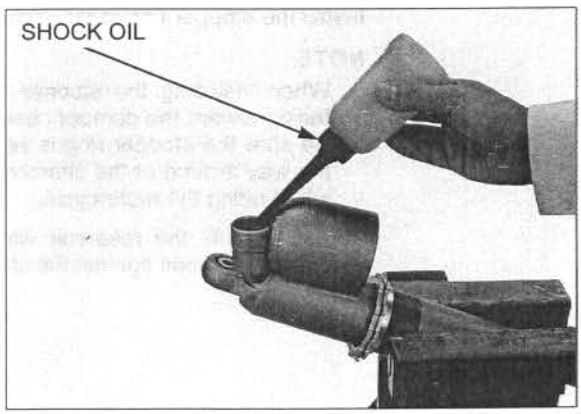

Remove the bladder from the chamber cap.

NOTE:
Do not use any sort of tool to remove the bladder, because it may damage the chamber cap.

Replace the bladder with a new one. Do not reuse the removed one.

Attach a new bladder to the chamber cap.

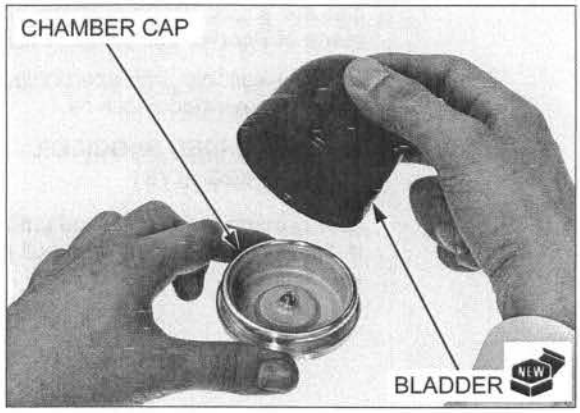

If the bladder becomes distorted during installation, depress the valve core to reform it.

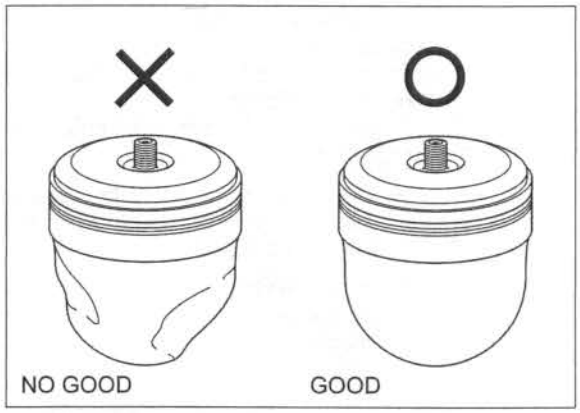

Clean the inside of the reservoir.

Apply a light coat of recommended shock oil (page 15-27) to the lips of the bladder, and press the chamber cap into the reservoir to about 1.0 – 2.0 mm (0.04 – 0.08 in) below the stopper ring groove.

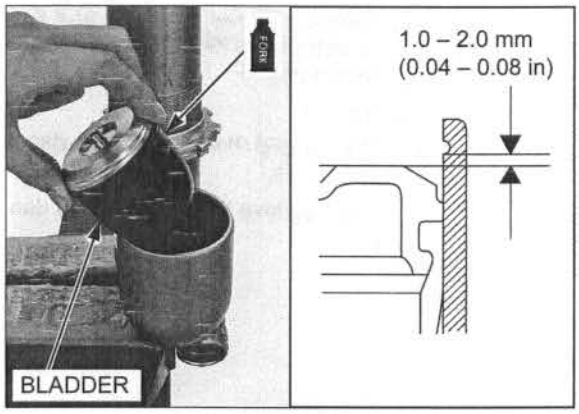

Install the stopper ring in the groove of the reservoir.

NOTE:
- When installing the stopper ring with its end gap facing toward the damper case.
- Be sure the stopper ring is seated in the groove all the way around or the chamber cap can come apart when riding the motorcycle.

Temporarily fill the reservoir with air slowly until the chamber cap seats against the stopper ring.

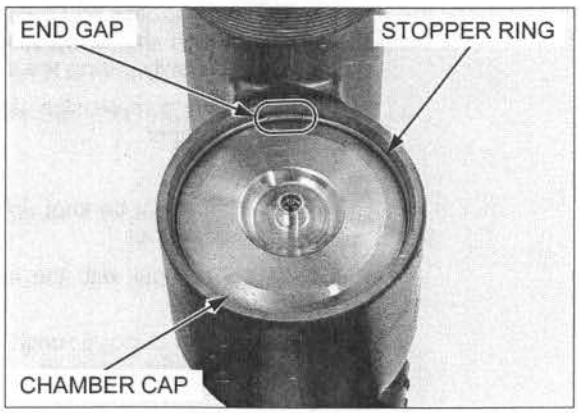

Make sure the chamber cap face is level with the reservoir face.

If the chamber cap does not seat fully, the chamber cap may fly out when filling the reservoir with nitrogen.

Release the air from the bladder by depressing the valve core.

Fill and bleed the shock absorber (page 15-27).
Fill the reservoir with nitrogen to the specified pressure (page 15-28).

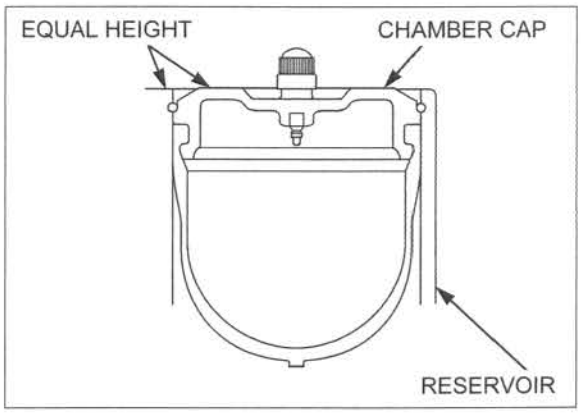

DAMPER DISASSEMBLY

Point the valve away from you to prevent debris getting in your eyes.

Depress the valve core to release the nitrogen from the reservoir (page 15-16).

Remove the compression damping adjuster and O-rings.

NOTE:
Before disposal of the shock absorber, release the nitrogen by pressing the valve core. Then remove the valve core from the chamber cap.

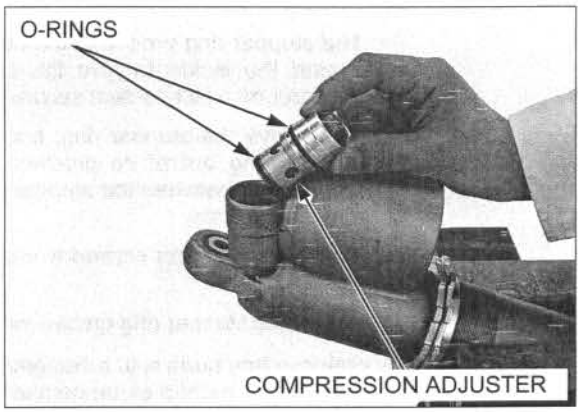

Drain most of the shock oil from the damper and reservoir, by pumping the damper rod in and out several times.

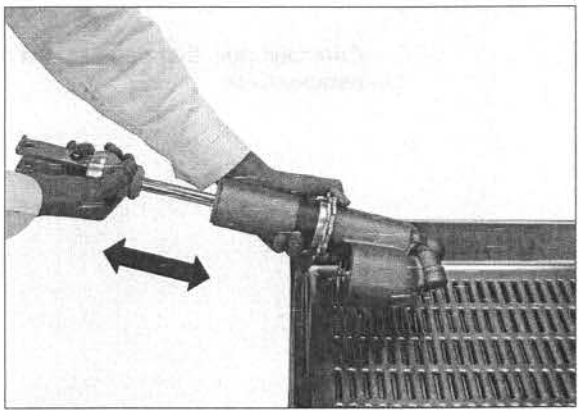

Do not over-tighten the vise and distort the damper case.

Set the damper case in a vise with a piece of wood or soft jaws to avoid damage.

Remove the end plate, and tape or tie it to the rubber stopper so it will not get in the way.

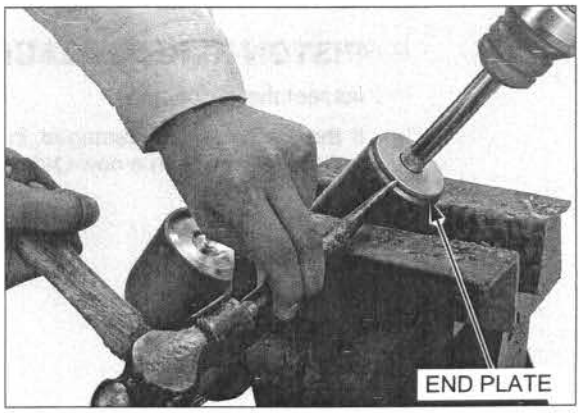

Push in the rod guide case until you have good access to the stopper ring.

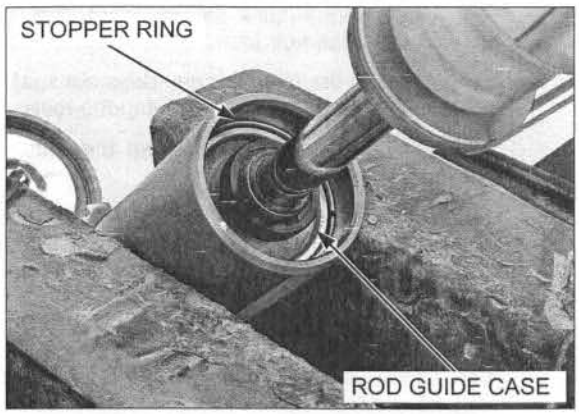

Two small screwdrivers are required to remove the stopper ring.

The stopper ring groove in the damper case is ramped toward the inside to give the stopper ring a square shoulder on which to seat securely.

To remove the stopper ring, first push one end of the stopper ring out of its groove, then slip the second screwdriver between the stopper ring and damper case to act as a ramp.

Now, use the other screwdriver to pull the stopper ring completely out.

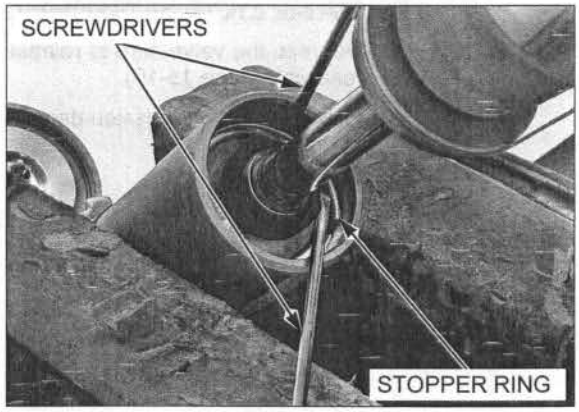

Check the stopper ring groove for burrs.

Burrs will damage the damper rod piston ring.

Remove any burrs with a fine emery cloth before pulling the damper rod out of the damper case.

Carefully pull the damper rod assembly out of the damper case.

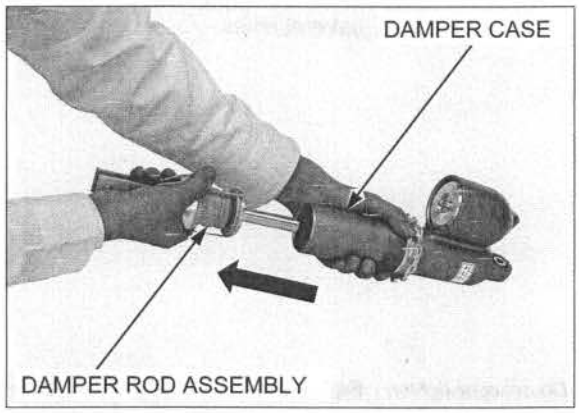

PISTON RING REPLACEMENT

Inspect the piston ring.

If the piston ring is damaged, cut the piston ring and replace it along with a new O-rings.

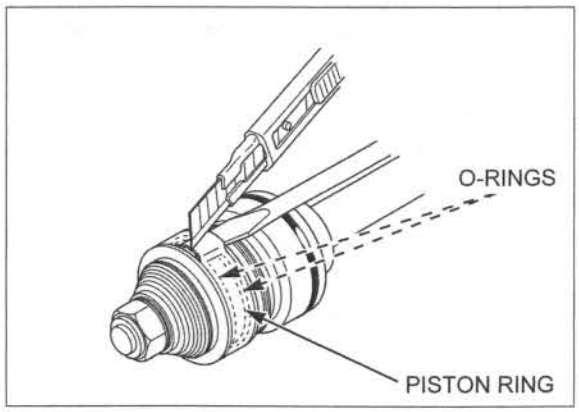

Apply recommended shock oil (page 15-27) to new O-rings and piston ring.

Place the piston ring guide attachment over the piston, and install the O-rings and piston ring into place by hand.

TOOL:

Piston ring guide attachment	**070MG-KZ30100 not available in U.S.A.**

Compress the piston ring against the ring groove and seat the piston ring into the ring groove.

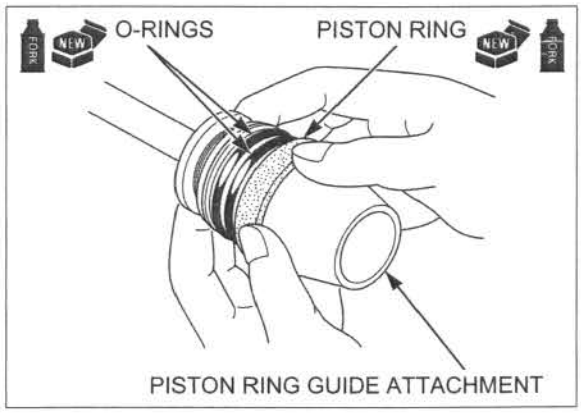

DAMPER ROD DISASSEMBLY

To keep lint or dirt from getting onto the damper rod parts, do not wear gloves while working on the damper rod.

Do not over-tighten the vise and distort the shock mount.

Set the shock absorber lower mount in a vise with a piece of wood or soft jaws to avoid damage.

Grind the damper rod end with a file as shown.
Be careful to file the damper rod end nut by hand so that the O.D. of the rod end is about 10 mm (0.4 in). Be careful not to over-file.

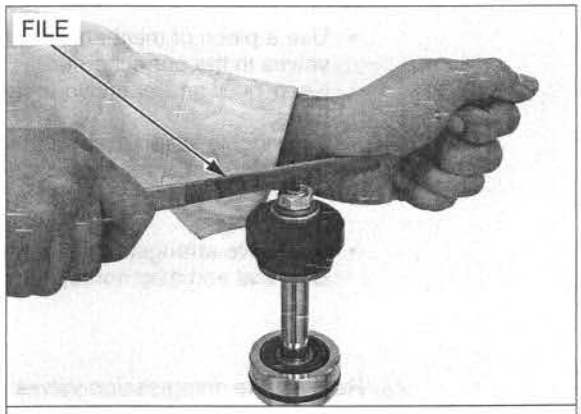

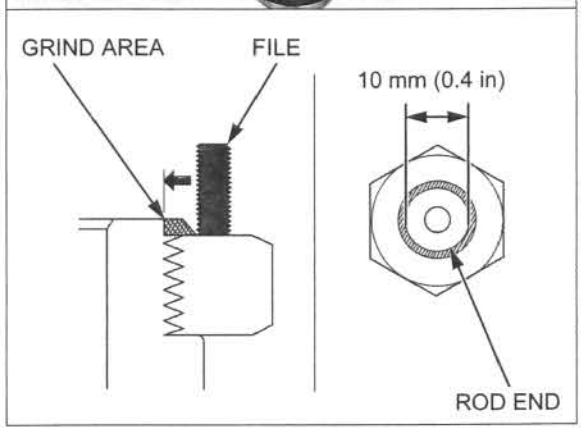

Turn the damper rod end nut back-and-forth in 1/4 turn increments until it loosens, then rotate another 1/4 turn and repeat turning back-and-forth until the damper rod end nut loosens completely.

If the damper rod is cracked or damaged when removing the damper rod end nut, replace the damper rod assembly with a new one.

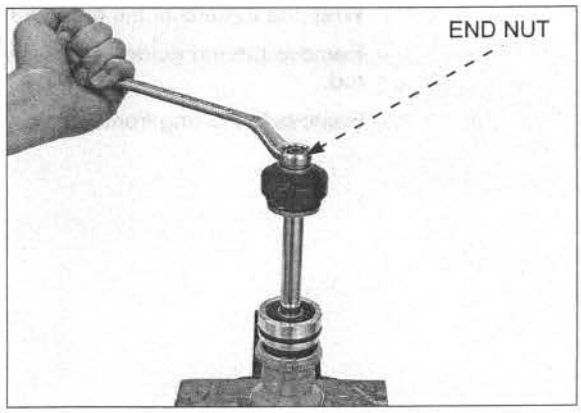

Make sure that filings are not stuck in the damper rod.

Remove the burrs from the damper rod end with a file and correct the threads with a die.

DIE: 12 x 1.5 mm

Clean the damper rod with solvent after correcting the threads.

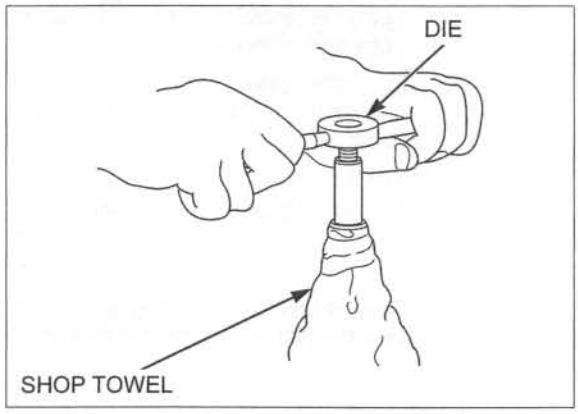

Remove the washers, valve stopper, rebound valves and piston from the damper rod.

- Use a piece of mechanics wire to keep the removed valves in the correct order.
- Keep dust and abrasive away from all damper rod parts.
- Thoroughly clean the valves in solvent and blow them dry with compressed air.
- Be careful not to get solvent on the O-rings and piston ring.
- The valve arrangement and number of valves shown is typical and may not represent this model exactly.

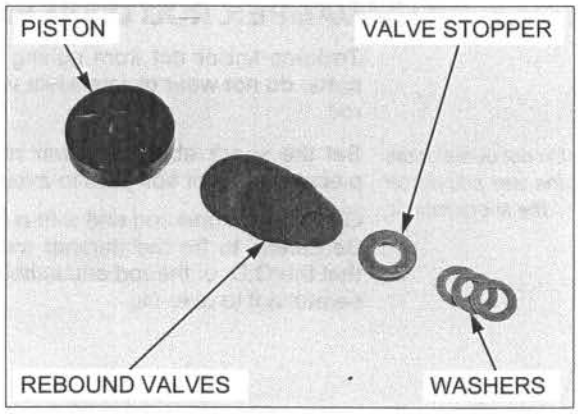

Remove the compression valves and valve stopper.

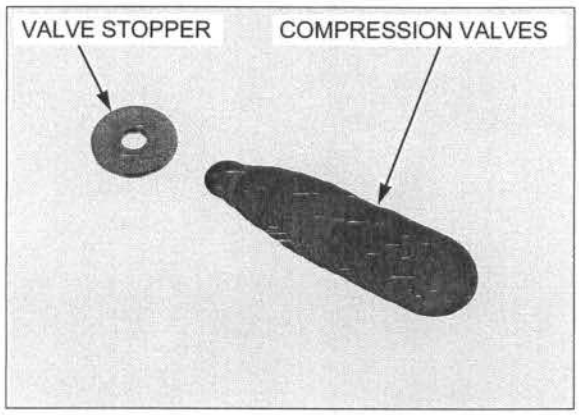

Chase the threads with a die and clean with shock oil.

Wrap the threads of the damper rod with tape.

Remove the rod guide case assembly from the damper rod.

Remove the O-ring from the rod guide case.

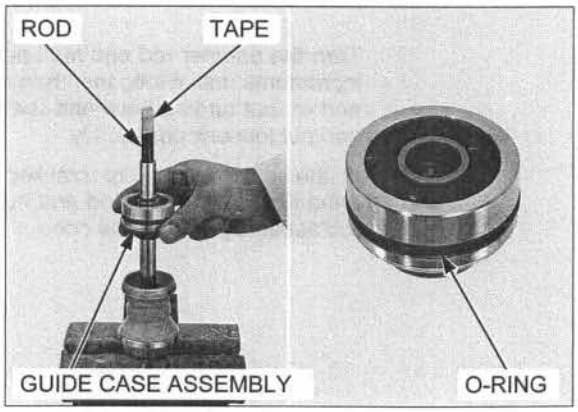

Remove the end plate, rubber stopper and rubber seat from the damper rod.

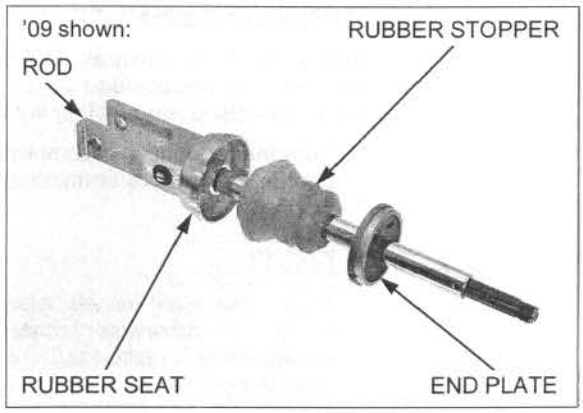

ROD GUIDE CASE INSPECTION

Inspect the rebound rubber, oil seal lips and dust seal lips for wear or damage, and replace them with new ones if necessary.

- When replace the rebound rubber, oil seal and dust seal, apply recommended shock oil.

Visually inspect the rod guide case metal.
If the metal is worn so that the copper surface appears, replace the rod guide case with a new one.

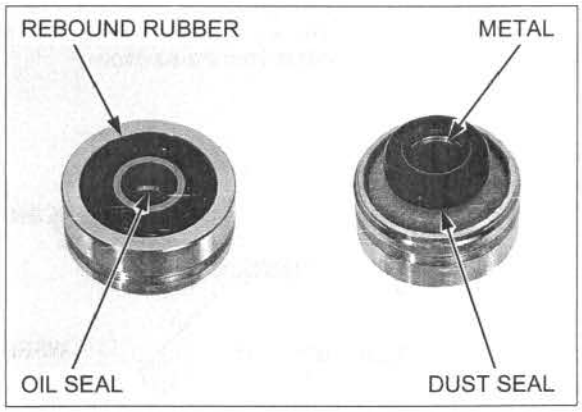

COMPRESSION ADJUSTER INSPECTION

Inspect the compression adjuster for wear, scratches or damage.

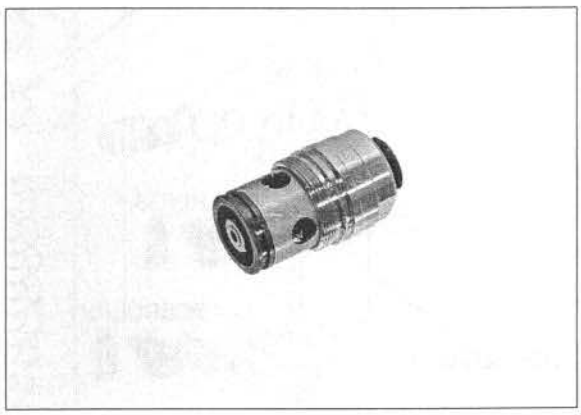

DAMPER ROD INSPECTION

Inspect the damper rod sliding surface for damage or distortion.

Replace it if necessary.

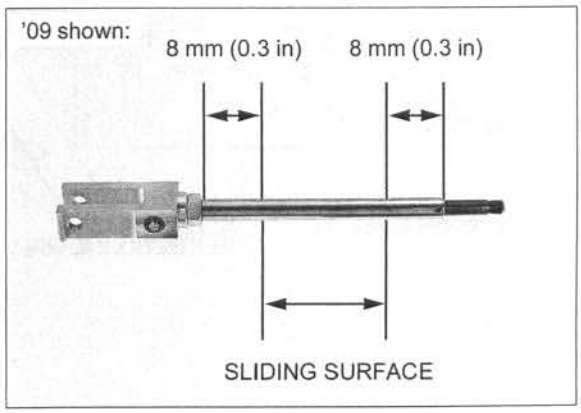

DAMPER ASSEMBLY

Before assembly, wash all parts with solvent, and blow them dry with compressed air.
Make sure there is no dust or lint on any of the parts.

- Turn the rebound and compression (low speed side) damping adjusters counterclockwise to the softest position.

NOTICE

- *Never assemble valves which might have gotten dusty or otherwise contaminated during the disassembly process. Disassemble them, thoroughly clean them with solvent and blow them dry with compressed air before assembly.*
- *Use care to avoid getting solvent on the piston ring and O-rings.*
- *The valve arrangement and number of valves may differ from those shown.*

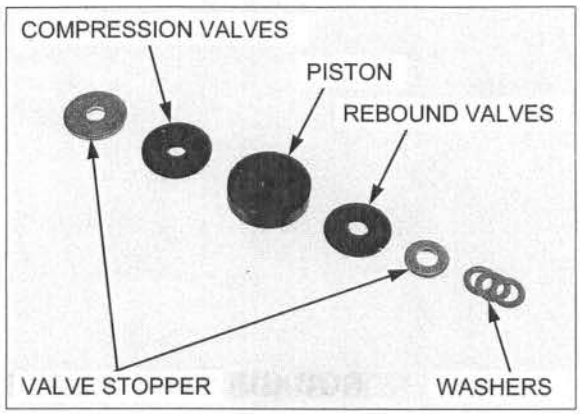

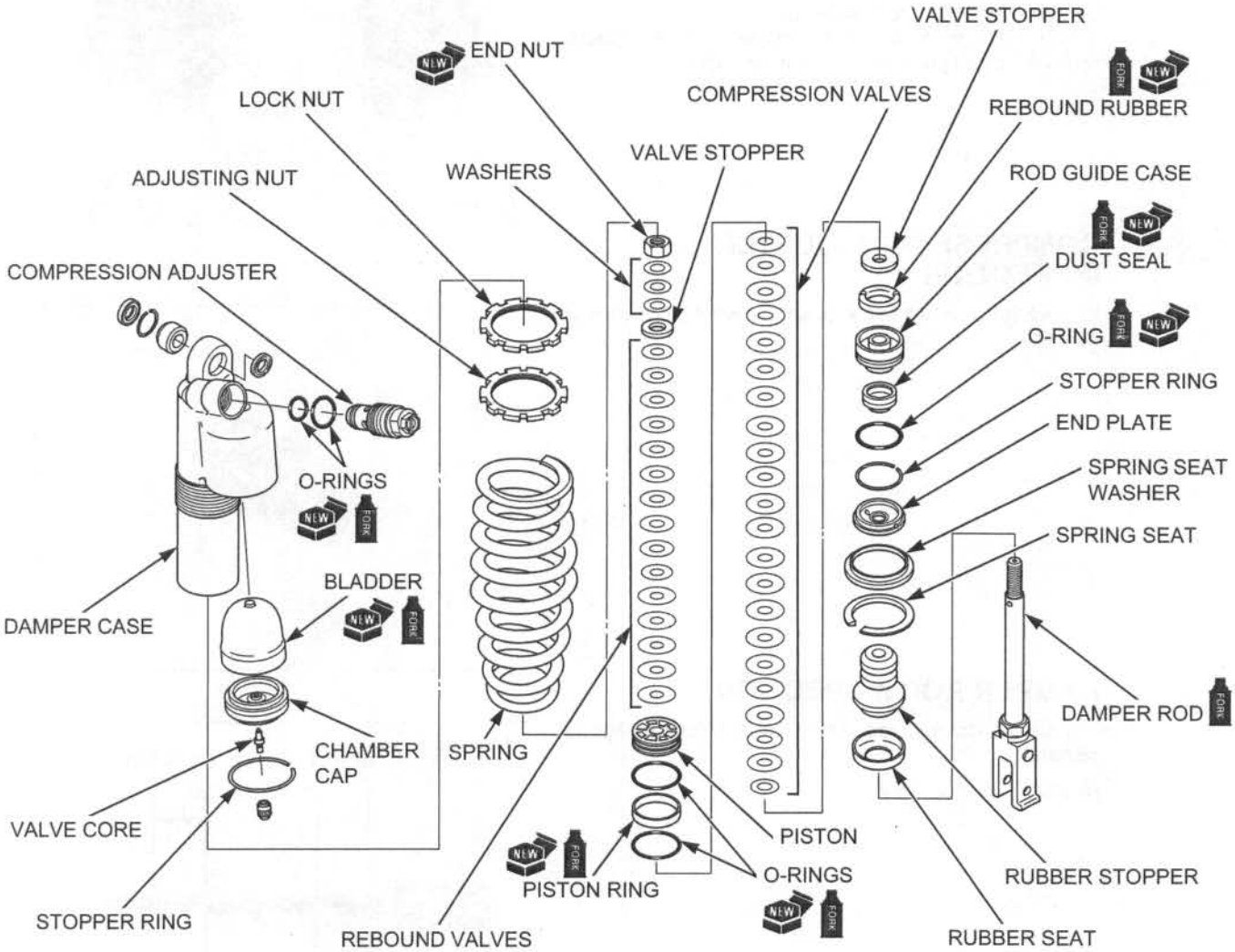

Install the rubber seat, rubber stopper and end plate.

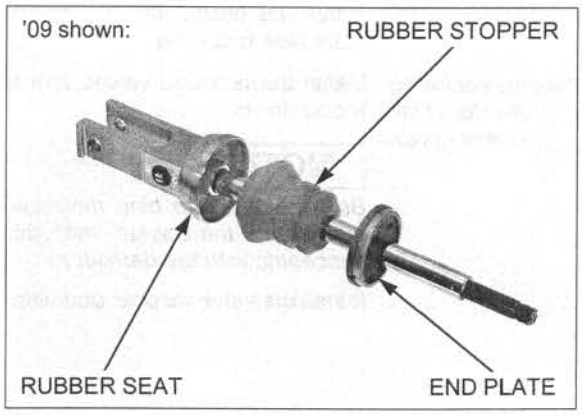

Apply recommended shock oil (page 15-27) to a new O-ring, and install it to the rod guide case.

Apply recommended shock oil (page 15-27) to rebound rubber, oil seal lips and dust seal lips.

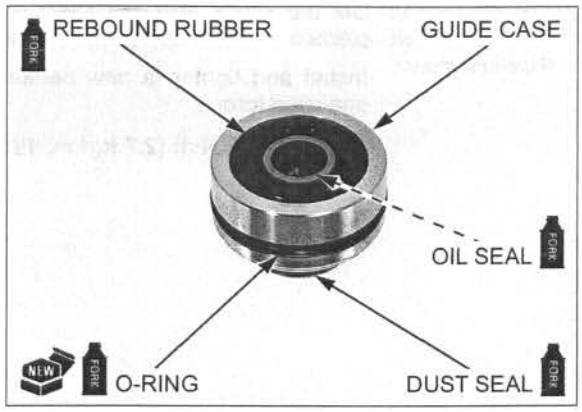

Install the special tool onto the damper rod.

TOOL:

Slider guide, 16 mm	**07PMG-KZ40100 not available in U.S.A.**

Coat the damper rod sliding surface with shock oil.

Carefully install the rod guide case assembly with the rebound rubber facing up, over the damper rod.

Remove the special tool.

Check the rod guide case assembly by sliding it up and down fully to be sure there is no restriction.

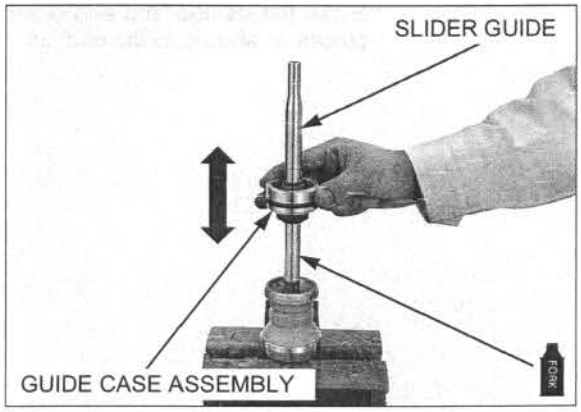

The valve arrangement and number of valves may vary from those shown.

Install the valve stopper and compression valves onto the damper rod.

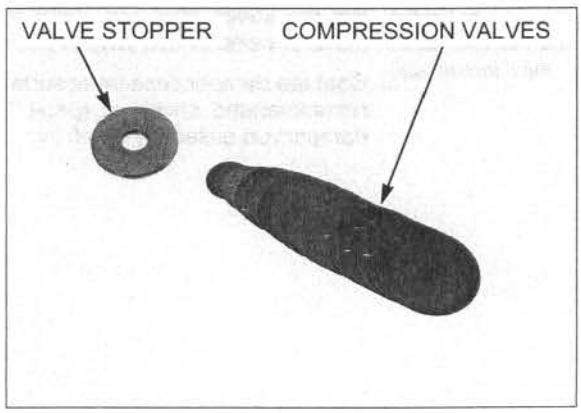

Install the piston onto the damper rod with its punch mark side facing up.

Note the installation direction of the piston valves.

Install the rebound valves with their polished surfaces facing down.

NOTICE

Be careful not to bind the valves when installing the piston onto the damper rod. Also, check that they are concentric with the damper rod.

Install the valve stopper and washers.

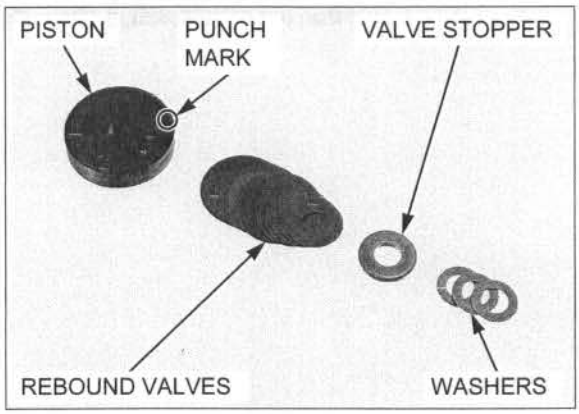

Do not over-tighten the vise and distort the shock mount.

Set the shock absorber lower mount in a vise with a piece of wood or soft jaws to avoid damage.

Install and tighten a new damper rod end nut to the specified torque.

TORQUE: 26 N·m (2.7 kgf·m, 19 lbf·ft)

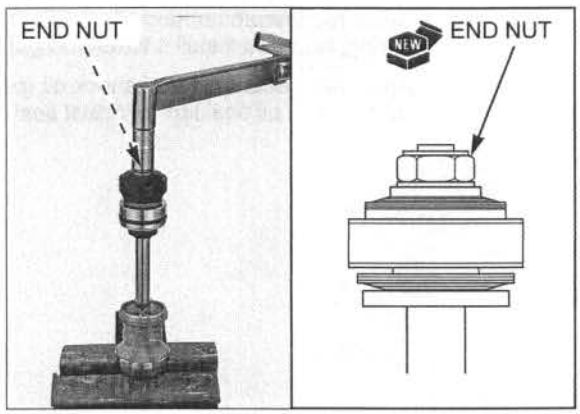

Stake the damper rod end of the damper rod in three places as shown, to the end nut.

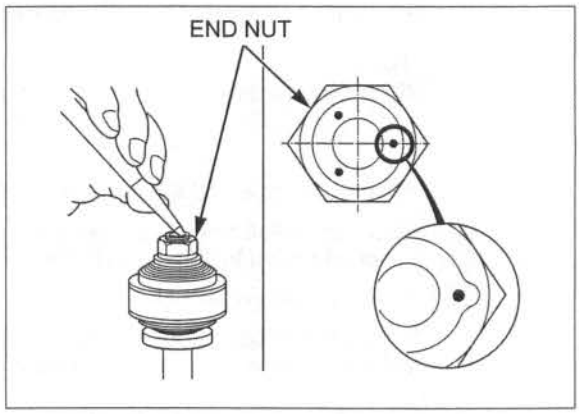

Do not over-tighten the vise and distort the shock mount.

Set the shock absorber upper mount in a vise with a piece of wood or soft jaws to avoid damage.

Coat the damper case inner surface and piston ring with recommended shock oil (page 15-27), and insert the damper rod assembly carefully.

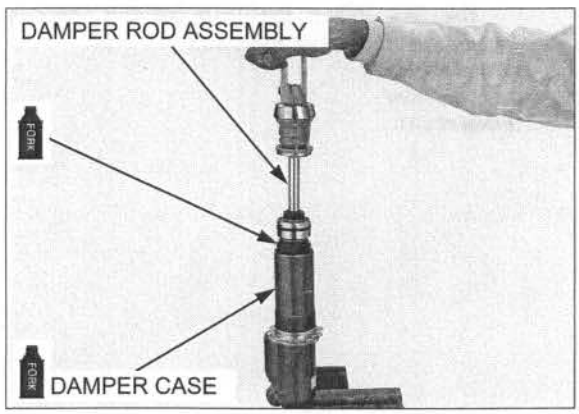

Do not over-tighten the vise and distort the damper case.

Set the damper case in a vise with a piece of wood or soft jaws to avoid damage.

Install the stopper ring into the groove in the damper case.

Make sure the rod guide case is seated against the stopper ring by pulling the damper rod all the way out.

After assembly, check that the stopper ring is seated in the groove of the damper case completely.
You should not be able to pull the damper rod out of the damper case.

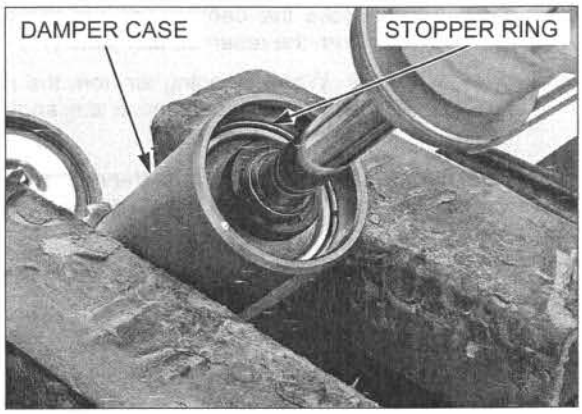

Drive the end plate squarely and evenly into the damper case with a plastic hammer.

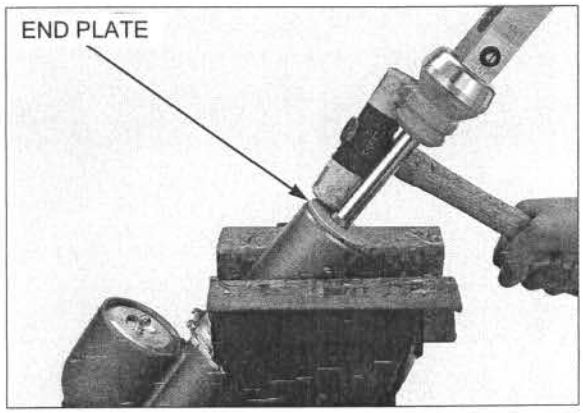

Fill the damper case and reservoir with recommended shock oil through the compression damping adjuster hole.

RECOMMENDED SHOCK OIL:
KHV10-K2C (KYB)
STANDARD OIL CAPACITY:
420 cm³ (14.2 US oz, 14.8 Imp oz)

Slowly pump the damper rod until there are no bubbles in the shock oil that overflows from the damper case.

Do not let oil flow out of the reservoir.

Remove the damper unit from the vise while holding the compression damping adjuster hole facing up.

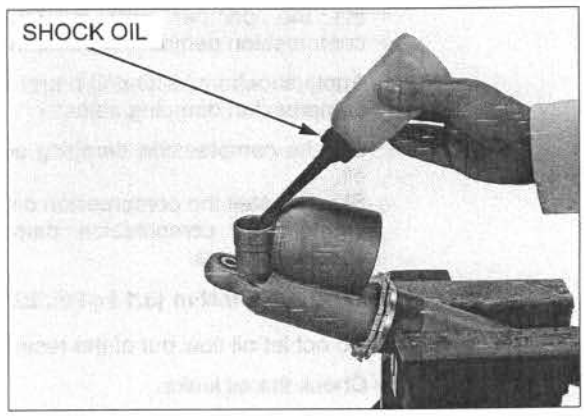

Move the damper unit up and down to bleed any air from the reservoir completely.

- When bleeding air from the reservoir, be careful to hold the damper at the angles shown so the filler hole points up.

Be sure the reservoir pressure is correct using an accurate pressure gauge.

Temporarily charge the reservoir with 49 kPa (0.5 kgf/cm^2, 7.1 psi) of air slowly to inflate the bladder.

Check for any shock oil that may leak out of the valve while pressurizing. Replenish oil as necessary.

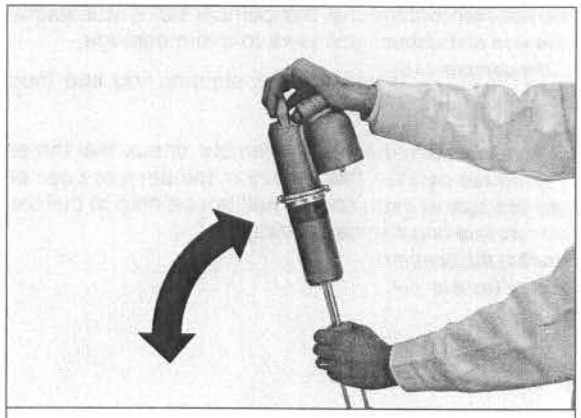

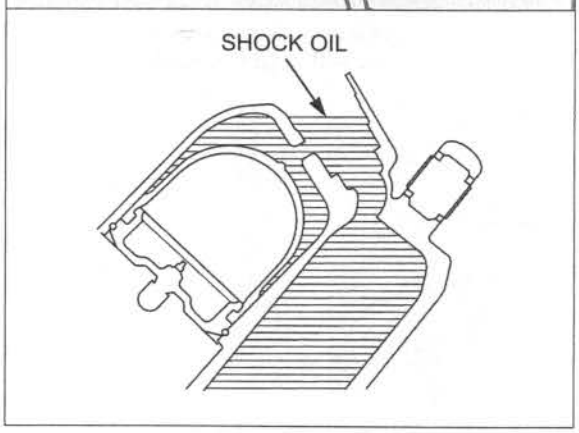

Fill the damper with KHV10-K2C (KYB) to the compression damping adjuster hole neck.

Apply shock oil to new O-rings, and install them to the compression damping adjuster.

Dip the compression damping adjuster in clean shock oil.
Slowly install the compression damping adjuster.
Tighten the compression damping adjuster to the specified torque.

TORQUE: 30 N·m (3.1 kgf·m, 22 lbf·ft)

Do not let oil flow out of the reservoir.

Check the oil leaks.

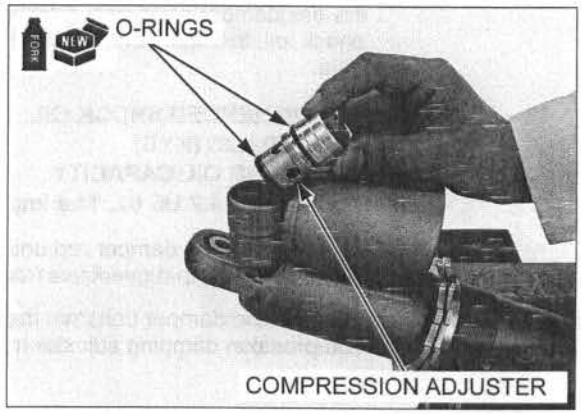

Release the air that was in the reservoir at precompression. Fill the reservoir with 1 MPa (10.2 kgf/cm^2, 145 psi) of nitrogen gas.

⚠CAUTION

The shock absorber is fitted with a gas-filled reservoir. The use of an unstable gas can cause a fire or explosion, resulting in serious injury. Use only nitrogen gas to pressurize the shock absorber.

Install the valve cap.

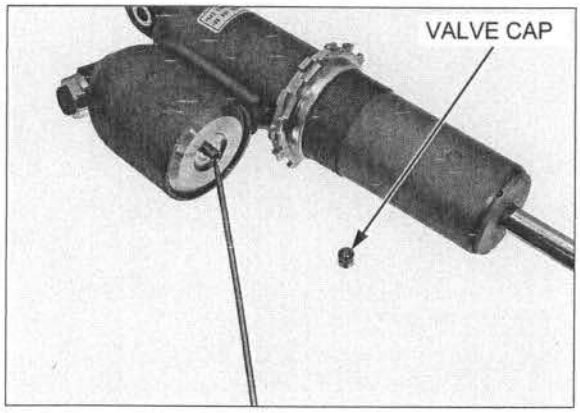

Install the shock absorber spring with its paint mark side (small O.D. side) facing toward the lower mount.
Install the spring seat washer.

Install the spring seat while compressing the shock absorber spring.

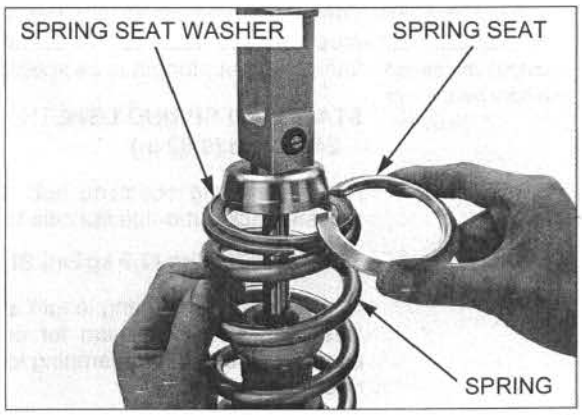

Slide the rubber stopper while it is fully seated to the rubber seat.

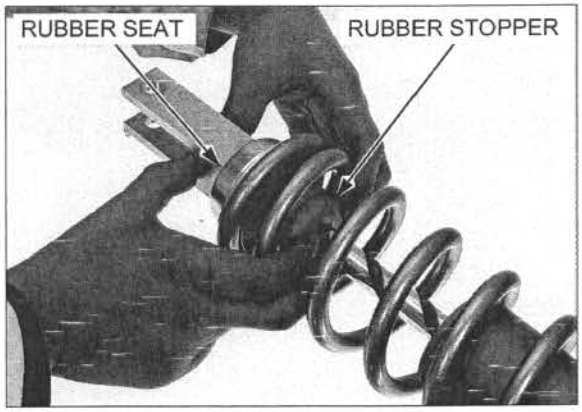

Turn the shock absorber lower mount so the rebound damping adjuster screw is on the same side of the shock reservoir.

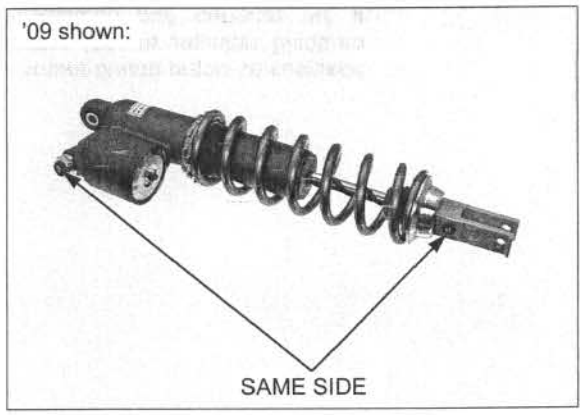

Space the spring seat end gap and shock absorber spring end 180° apart as shown.

Loosely tighten the spring adjusting nut and spring adjuster lock nut.

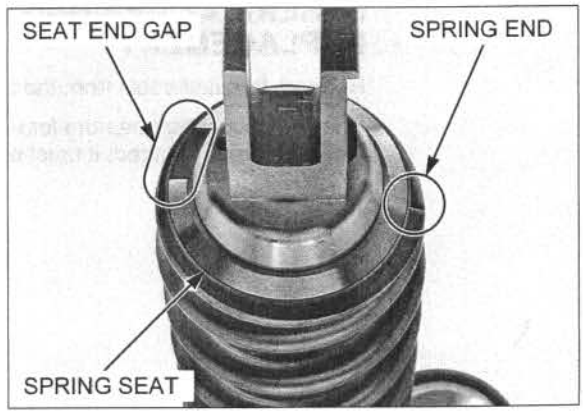

One turn of the adjusting nut changes the spring length by 1.5 mm (0.06 in).

Turn the spring adjusting nut until the spring length measurement recorded at disassembly is reached or until the spring length is as specified below.

STANDARD SPRING LENGTH:
249.5 mm (9.82 in)

Hold the spring adjusting nut, and tighten the spring adjuster lock nut to the specified torque.

TORQUE: 28 N·m (2.9 kgf·m, 21 lbf·ft)

Use this standard spring length as the baseline.
See the Owner's Manual for detailed instructions on adjusting preload and damping for riding conditions and rider skill.

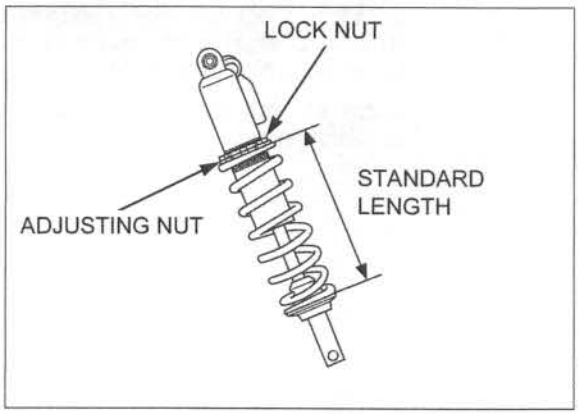

Make sure the spring seat end gap and shock absorber spring end 180° apart from each end.

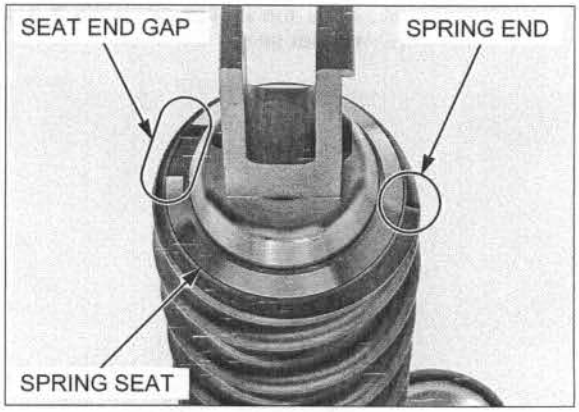

If the rebound and compression (low speed side) damping adjuster turned, return them to the original positions as noted during removal.

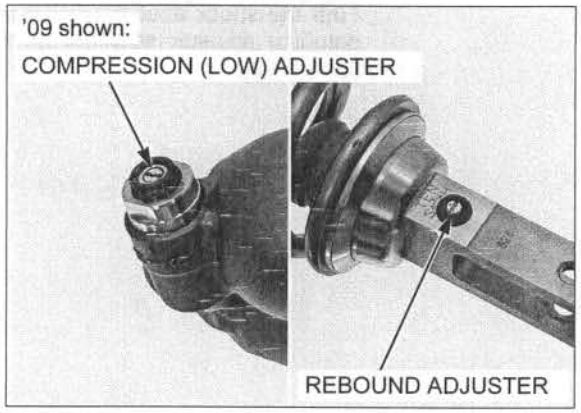

SPHERICAL BEARING REPLACEMENT

Remove the dust seals from the upper mount.

Check the spherical bearing for wear or damage.
If it is worn or damaged, it must be replaced.

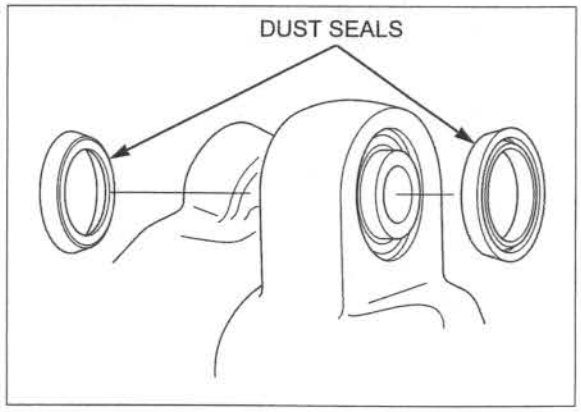

Press the spherical bearing to get the clearance necessary to remove the stopper ring using the special tool.

TOOL:
Collar, 23 x 17 mm **07GMD-KT8A110**

Remove the stopper ring.

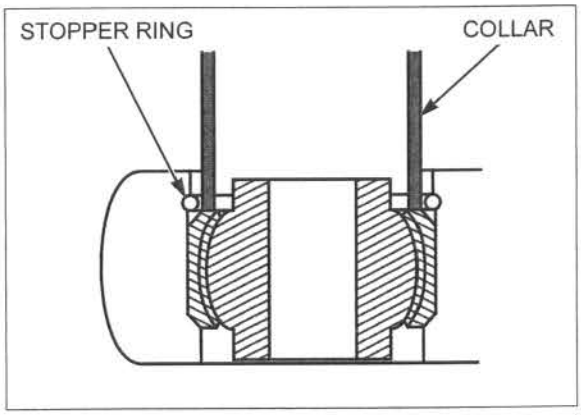

Press the spherical bearing out of the upper mount using the special tools.

TOOL:
Collar, 23 x 17 mm **07GMD-KT8A110**
Attachment, 30 mm I.D. **07746-0030300**

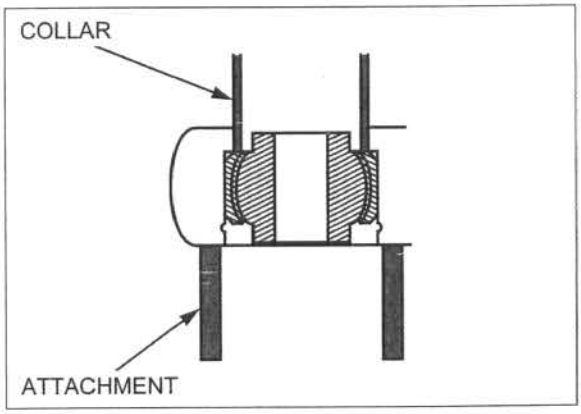

Drive the bearing in evenly; do not allow it to tilt.

Apply multi-purpose grease NLGI No.2 (molybdenum disulfide MoS2 additive) to a new spherical bearing rolling area.

Press the spherical bearing into the upper mount.

TOOL:
Collar, 23 x 17 mm **07GMD-KT8A110**

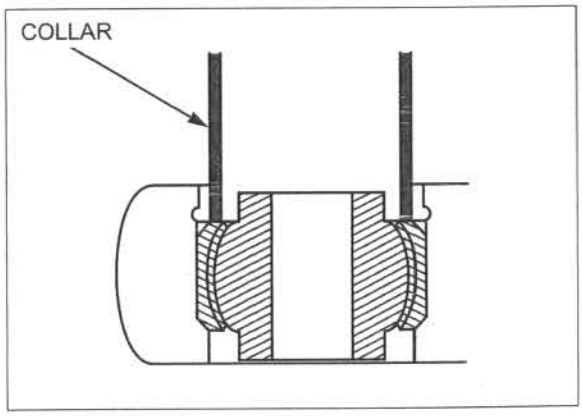

Install a new stopper ring into the groove of the upper mount securely.

Press the spherical bearing into the upper mount using the special tool, until it seats against the stopper ring.

TOOL:
Collar, 23 x 17 mm **07GMD-KT8A110**

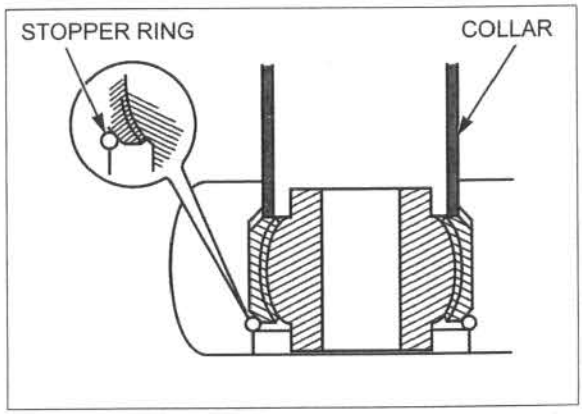

Be sure to install the correct dust seal in each side.

Apply grease to new dust seal lips, and install them.
Install the dust seals with the flat side facing toward the inside.

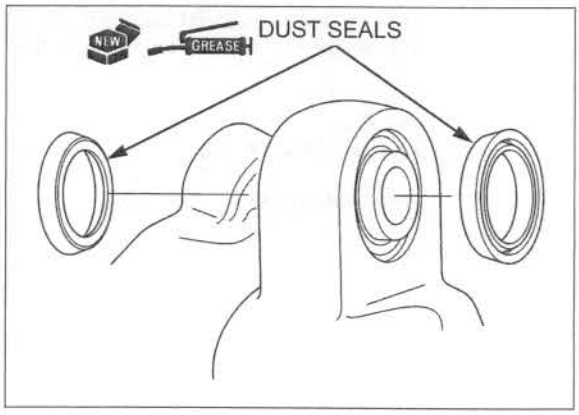

INSTALLATION

Set the shock absorber to the shock arm with the rebound damping adjuster facing right side.
Install the lower mounting bolt by aligning the flat side of the bolt with the stopper on the shock absorber.

Install and tighten the lower mounting nut to the specified torque.

TORQUE: 44 N·m (4.5 kgf·m, 32 lbf·ft)

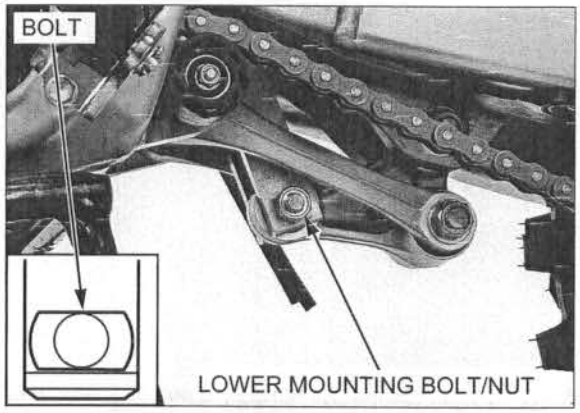

Install the upper mounting bolt by aligning the flat side of the bolt with groove of the frame.
Install and tighten the shock absorber upper mounting nut to the specified torque.

TORQUE: 44 N·m (4.5 kgf·m, 32 lbf·ft)

Install the sub-frame (page 3-7).

SHOCK LINKAGE

REMOVAL

Remove the nut and lower drive chain roller.

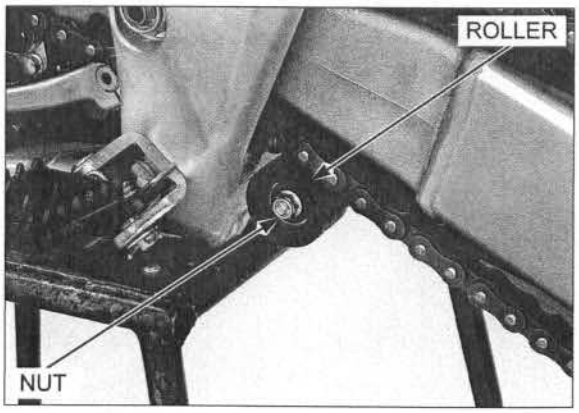

Remove the following:

- Shock absorber lower mounting bolt/nut
- Shock arm bolt/nut/washer (shock link side)
- Shock arm bolt/nut/washer (swingarm side)
- Shock arm
- Shock link bolt/nut/washer (frame side)
- Shock link

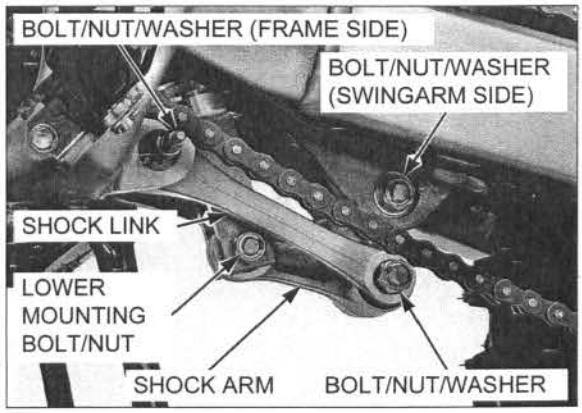

DISASSEMBLY

Remove the side collars and pivot collars from the shock arm (swingarm side, shock link side).

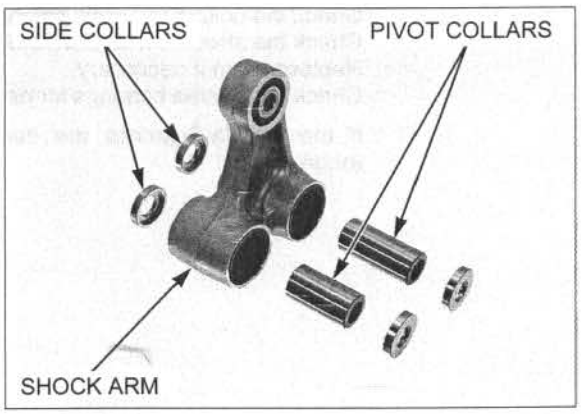

Remove the dust seals and washers (swingarm side, shock link side).

Remove the dust seals, side collars and pivot collar (shock absorber side).

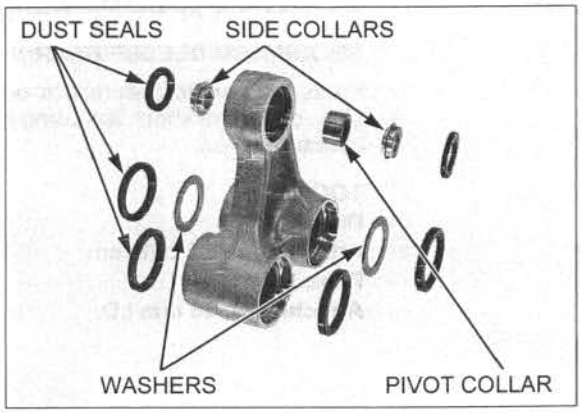

Remove the side collars, pivot collar and dust seals from the shock link.

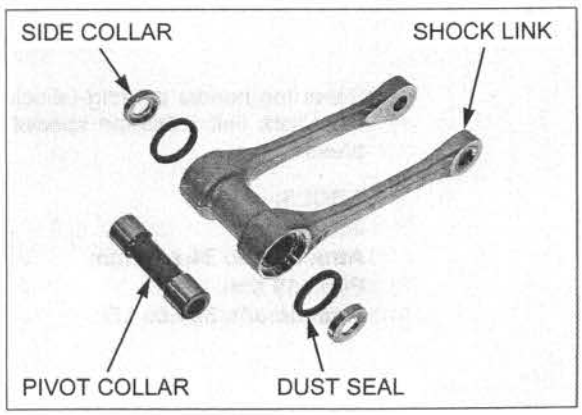

INSPECTION

Check the collars for wear, damage or fatigue.
Check the shock arm for cracks or damage.
Replace them if necessary.
Check the needle bearings for damage or loose fit.

If the needle bearings are damaged, replace them (page 15-34).

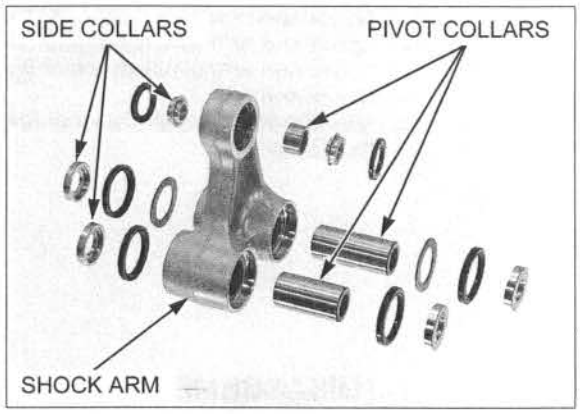

Check the collars for wear, damage or fatigue.
Check the shock link for cracks or damage.
Replace them if necessary.
Check the needle bearings for damage or loose fit.

If the needle bearings are damaged, replace them (page 15-35).

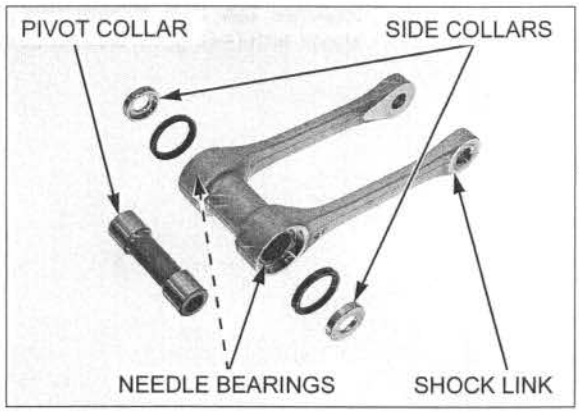

BEARING REPLACEMENT

SHOCK ARM NEEDLE BEARING

Press the needle bearings (shock link side, swingarm side) out of the shock link using the special tools and a hydraulic press.

TOOLS:

Driver	**07949-3710001**
Attachment, 24 x 26 mm	**07746-0010700**
Pilot, 20 mm	**07746-0040500**
Attachment, 30 mm I.D.	**07746-0030300**

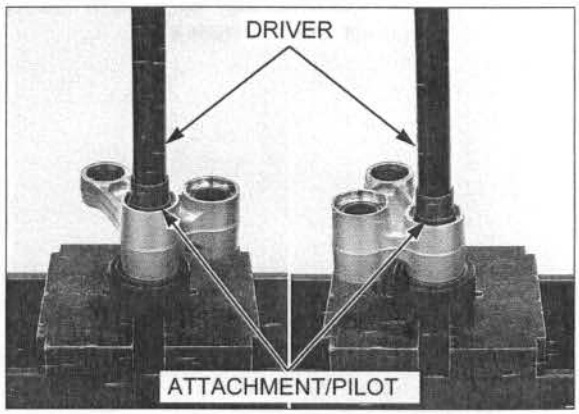

Press the needle bearing (shock absorber side) out of the shock link using the special tools and a hydraulic press.

TOOLS:

Driver	**07749-0010000**
Attachment, 24 x 26 mm	**07746-0010700**
Pilot, 19 mm	**07746-0041400**
Attachment, 30 mm I.D.	**07746-0030300**

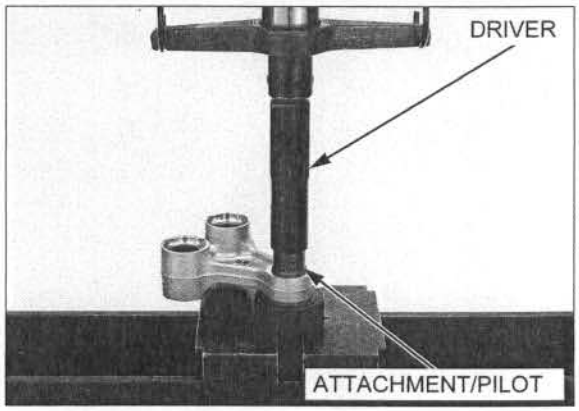

Apply specified grease (page 1-17) to new needle bearing rolling areas.

Press the needle bearing into the shock arm with the marked side facing out.

Press the needle bearings into the shock link side pivot with the special tools and a hydraulic press so that the needle bearing surface is 6.0 – 6.5 mm (0.24 – 0.26 in) below the end of the shock arm surface.

TOOLS:

Driver	**07749-0010000**
Attachment, 24 x 26 mm	**07746-0010700**
Pilot, 20 mm	**07746-0040500**

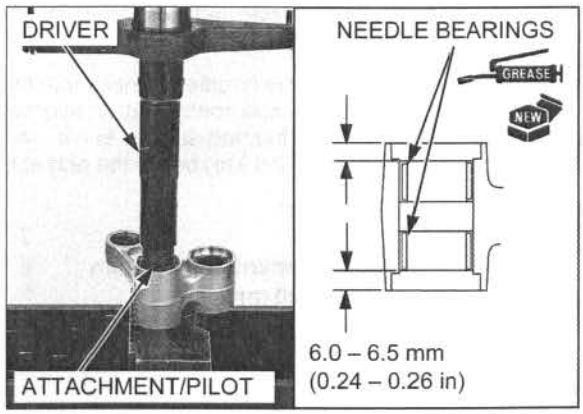

Apply specified grease (page 1-17) to new needle bearing rolling areas.

Press the needle bearing into the shock arm with the marked side facing out.

Press the needle bearings into the swingarm side pivot with the special tools and a hydraulic press so that the needle bearing surface is 4.4 – 4.7 mm (0.17 – 0.19 in) below the end of the shock arm surface.

TOOLS:

Driver	**07749-0010000**
Attachment, 24 x 26 mm	**07746-0010700**
Pilot, 20 mm	**07746-0040500**

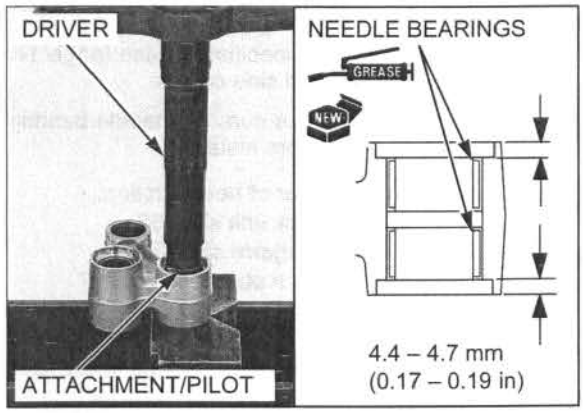

Apply specified grease (page 1-17) to new needle bearing rolling area.

Press the needle bearing into the shock absorber side pivot with the special tools and a hydraulic press so that the needle bearing surface is 3.0 – 3.2 mm (0.12 – 0.13 in) below the end of the shock arm surface.

TOOLS:

Driver	**07749-0010000**
Attachment, 24 x 26 mm	**07746-0010700**
Pilot, 19 mm	**07746-0041400**

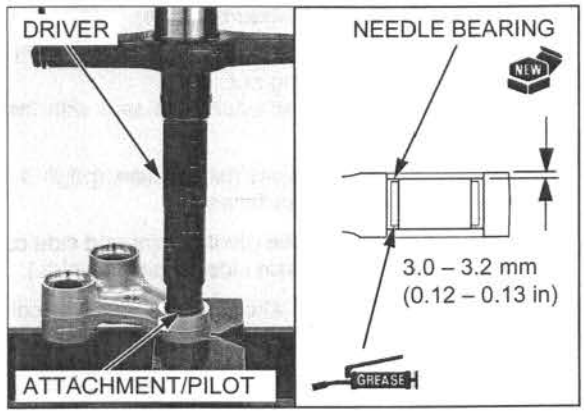

SHOCK LINK NEEDLE BEARING

Remove the needle bearings from the shock link.

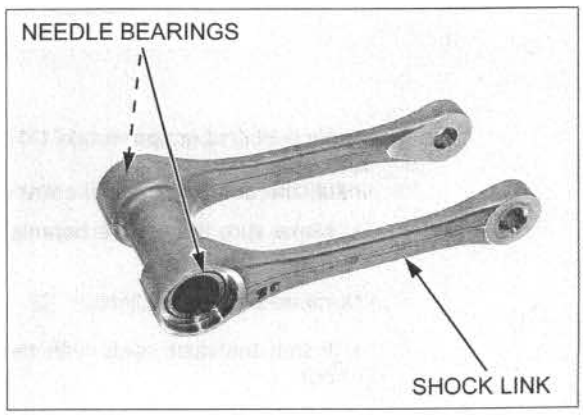

Apply specified grease (page 1-17) to new needle bearings.

Press the needle bearing into the shock arm with the marked side facing out.

Press the needle bearings into the frame side pivot with the special tools and a hydraulic press so that the needle bearing surface is 4.4 – 4.7 mm (0.17 – 0.19 in) below the end of the shock arm surface.

TOOLS:

Driver	**07749-0010000**
Attachment, 24 x 26 mm	**07746-0010700**
Pilot, 20 mm	**07746-0040500**

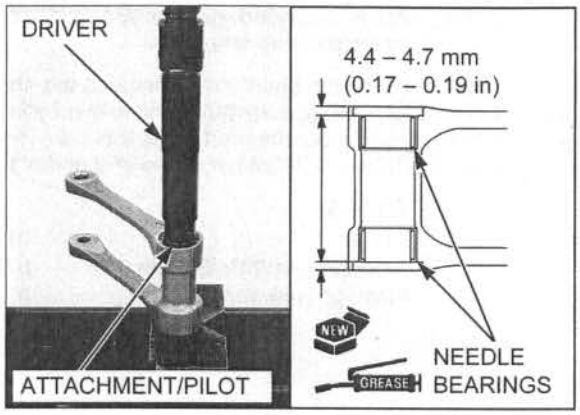

ASSEMBLY

Apply specified grease (page 1-17) to a new dust seal lips and side collars.

- Make sure the needle bearing rollers are in position before installing.

Number of needle rollers:
Shock link side: 32
Swingarm side: 32
Shock absorber side: 27

Install the washers and dust seals (shock link side).

Install the dust seals to the shock arm (swingarm side).

Install the pivot collar, side collars and dust seals (shock absorber side).

- Install the side collars with there larger O.D. side facing out.
- Install each dust seal with their marked side facing out.

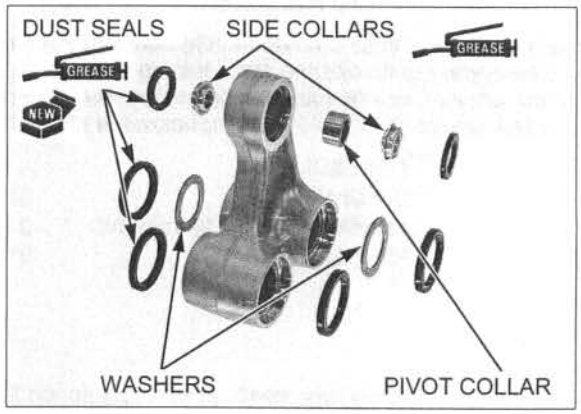

Apply specified grease (page 1-17) to the side collar inside surfaces.

Install the pivot collars and side collars to the shock arm (swingarm side, shock link side).

- The shock link side pivot collar is longer than the swingarm side pivot collar.

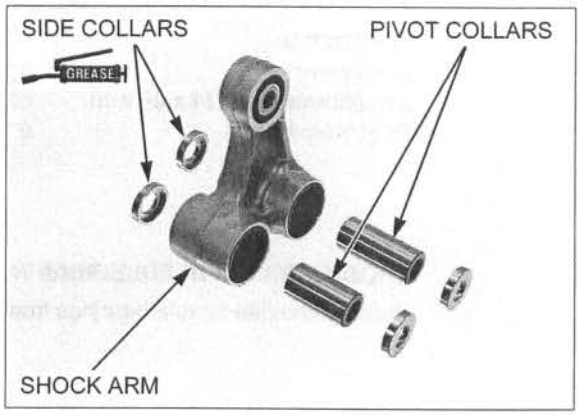

Apply specified grease (page 1-17) to new dust seal lips and side collars.
Install the dust seals, pivot collar and side collars.

- Make sure the needle bearing rollers are in position before installing.

Number of needle rollers: 32

- Install the dust seals with the marking side facing out.

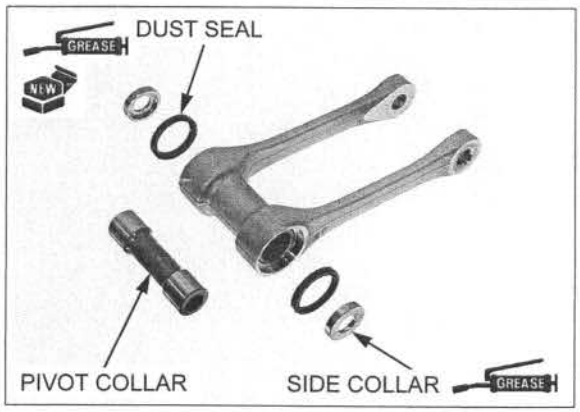

INSTALLATION

Apply molybdenum oil solution to the shock link and shock arm nut threads and seating surface.

Loosely install the following:

- Shock link
- Shock link bolt/nut/washer (frame side)
- Shock arm
- Shock arm bolt/nut/washer (swingarm side)
- Shock arm bolt/nut/washer (shock link side)
- Shock absorber lower mounting bolt/nut (page 15-32)

Tighten the all nuts to the specified torque.

TORQUE:
Shock link nut:
53 N·m (5.4 kgf·m, 39 lbf·ft)
Shock arm nut (swingarm side):
53 N·m (5.4 kgf·m, 39 lbf·ft)
Shock arm nut (shock link side):
53 N·m (5.4 kgf·m, 39 lbf·ft)
Shock absorber lower mounting nut:
44 N·m (4.5 kgf·m, 32 lbf·ft)

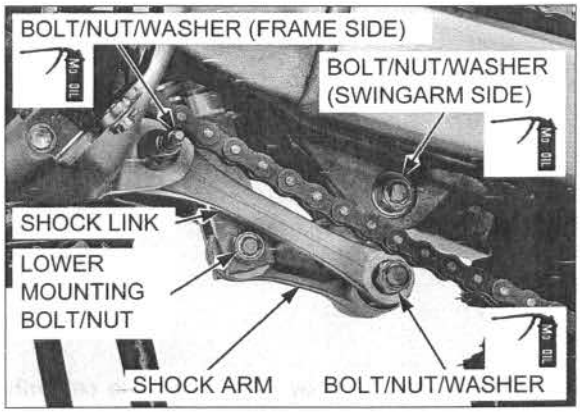

Install the drive chain lower roller with the " ↑ " mark side facing out.
Install and tighten the nut to the specified torque.

TORQUE: 12 N·m (1.2 kgf·m, 9 lbf·ft)

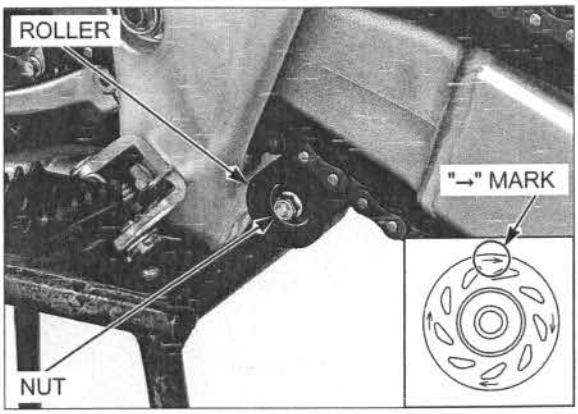

SWINGARM

REMOVAL

Raise the rear wheel off the ground by placing a workstand or equivalent under the engine.

Remove the following:

- Rear wheel (page 15-8)
- Drive chain (page 4-20)
- Brake pedal pivot bolt (page 16-29)

Remove the shock arm nut, washer and bolt (swingarm side).

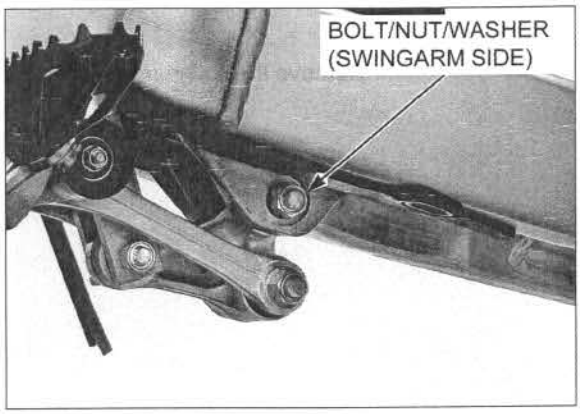

Remove the screws and brake hose guides.

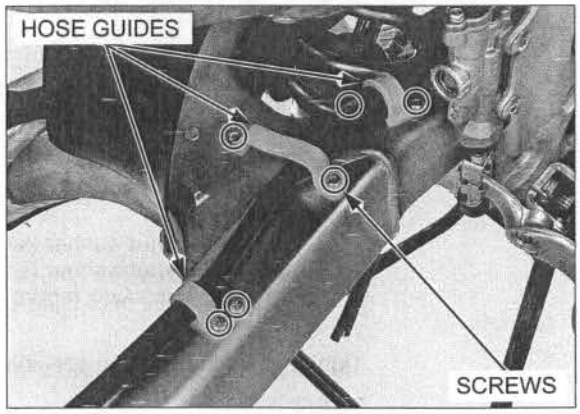

Do not hang the brake caliper by the brake hose. Do not twist the brake hose. Do not operate the brake pedal after removing the rear wheel.

Remove the rear brake caliper/bracket assembly from the slide rail of the swingarm.

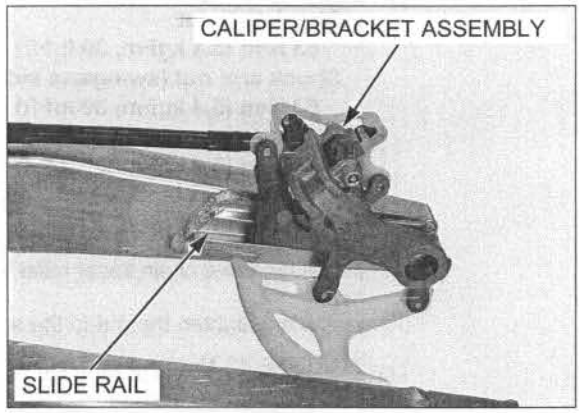

Remove the swingarm pivot nut and washer.

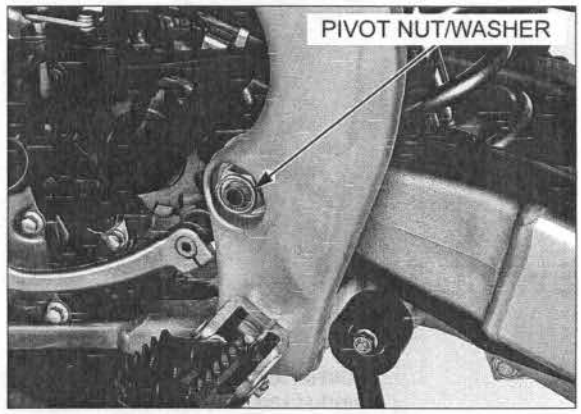

Remove the swingarm pivot bolt and swingarm.

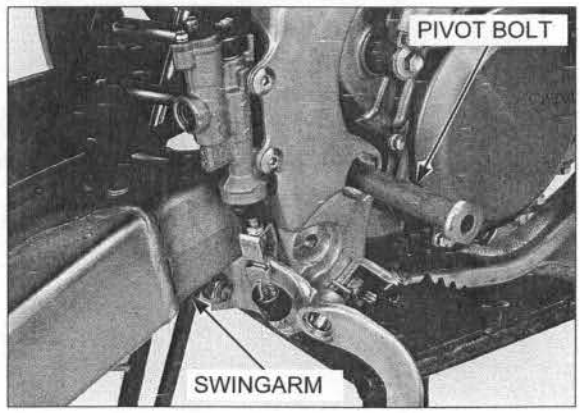

DISASSEMBLY

Check the chain guide slider and chain guide for wear or damage (page 4-22).

Remove the bolts, nuts, chain guide and chain guide slider.

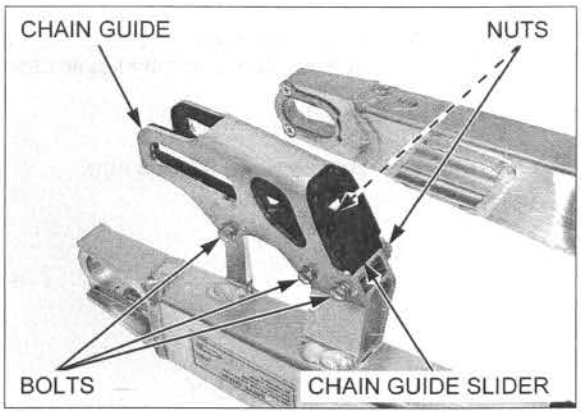

Remove the screws, washers and chain slider.

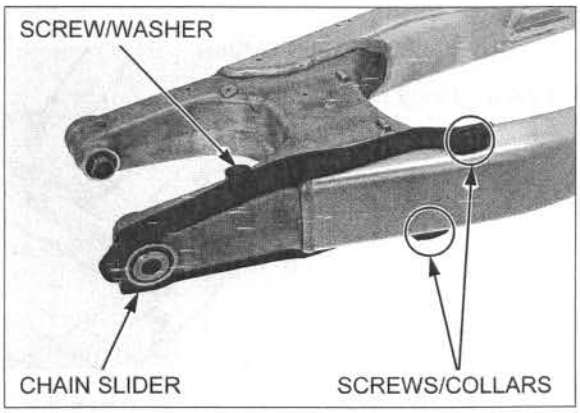

Remove the following:

- Side collars
- Dust seals
- Thrust washers
- Thrust needle bearing
- Pivot collars
- Needle bearing

Check the collars for wear, damage or fatigue.
Check the needle bearings for damage or loose fit.
Check the thrust needle bearings for wear or damage, replace if necessary.
Check the swingarm for cracks or damage.

Replace any damaged parts, if necessary.

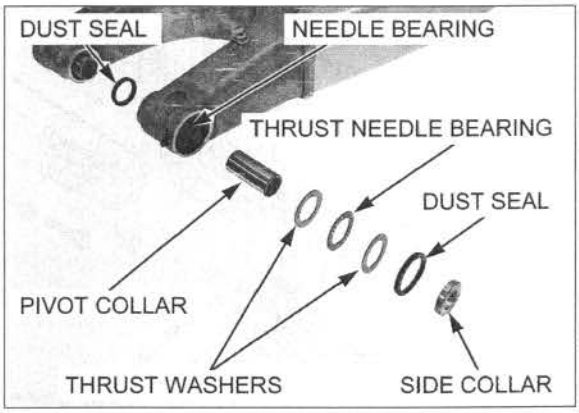

BEARING REPLACEMENT

Press the needle bearings out of the swingarm using the special tools and a hydraulic press.

TOOLS:

Driver	**07949-3710001**
Attachment, 24 x 26 mm	**07746-0010700**
Pilot, 22 mm	**07746-0041000**
Attachment, 30 mm I.D.	**07746-0030300**

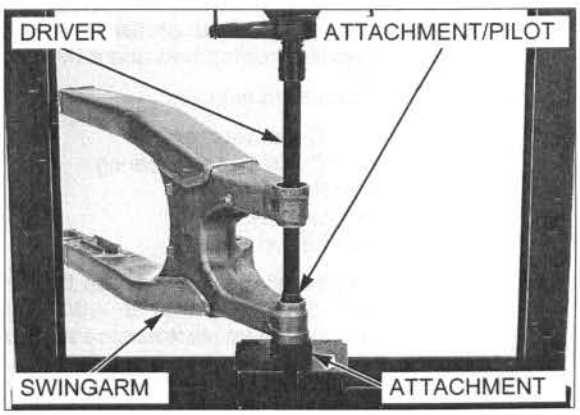

Press the needle bearing into the swingarm pivot with the marked side facing out.

Apply specified grease (page 1-17) to a new needle bearing rolling area.

Press the needle bearing into the swingarm using the special tools and a hydraulic press as shown.

TOOLS:

Driver	**07749-0010000**
Attachment, 28 x 30 mm	**07946-1870100**
Pilot, 22 mm	**07746-0041000**

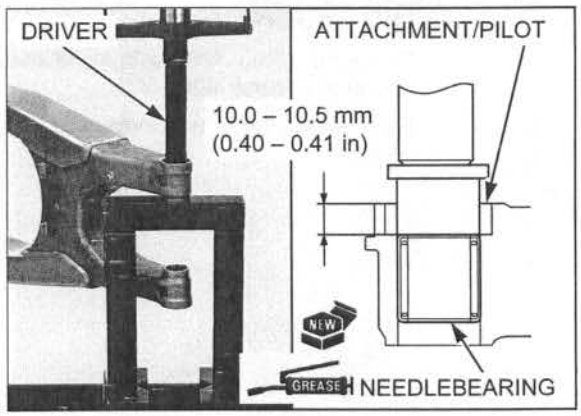

ASSEMBLY

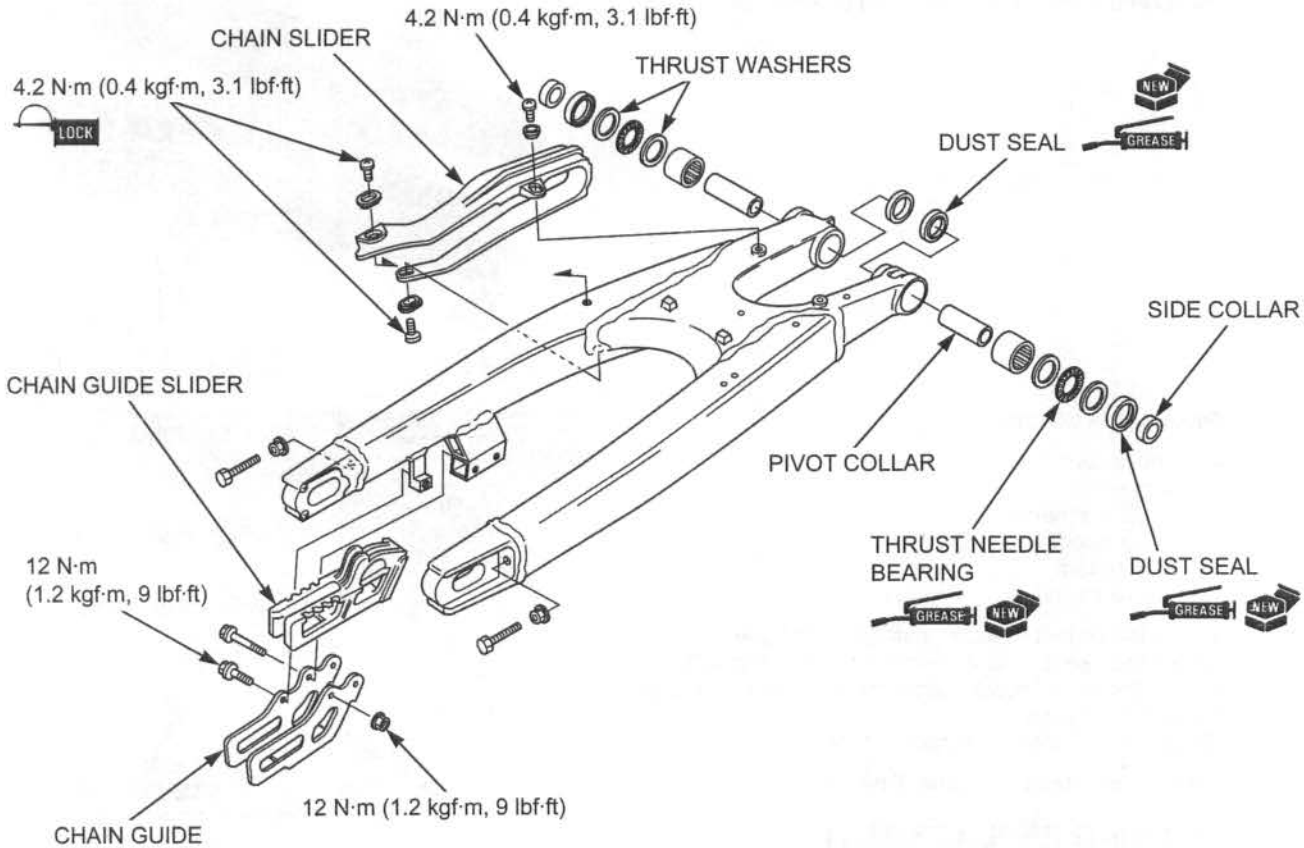

Apply specified grease (page 1-17) to a new thrust bearing rolling area and new dust seal lips.

Install the following:

- Thrust washers
- Thrust needle bearings
- Pivot collars
- Dust seals
- Side collars

• Install the dust seal so that the dust seal surface is 1.5 – 2.0 mm (0.06 – 0.08 in) below the end of the swingarm pivot surface as shown.

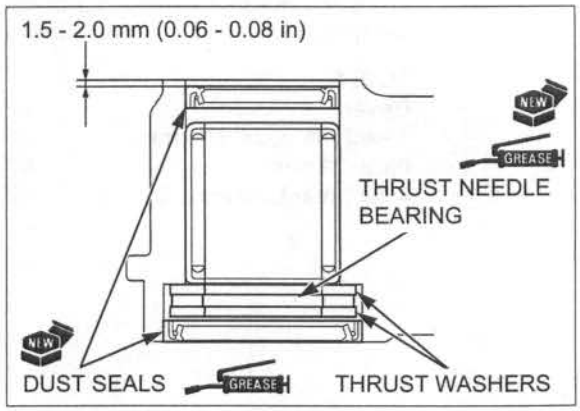

Install the chain slider so its hole fits over the tab on the swingarm.

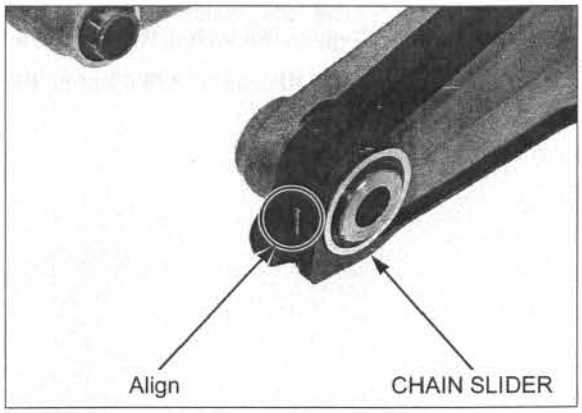

Apply locking agent to the screw threads as shown.

Install and tighten the screws with the washer and collars to the specified torque.

TORQUE: 4.2 N·m (0.4 kgf·m, 3.1 lbf·ft)

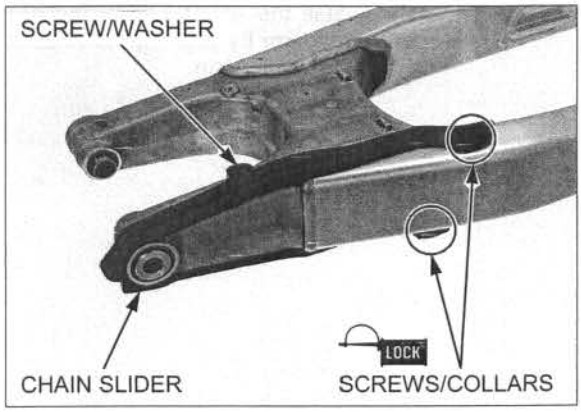

Install the chain guide slider to the chain guide, then install them to the swingarm.
Install and tighten the bolts/nuts to the specified torque.

TORQUE: 12 N·m (1.2 kgf·m, 9 lbf·ft)

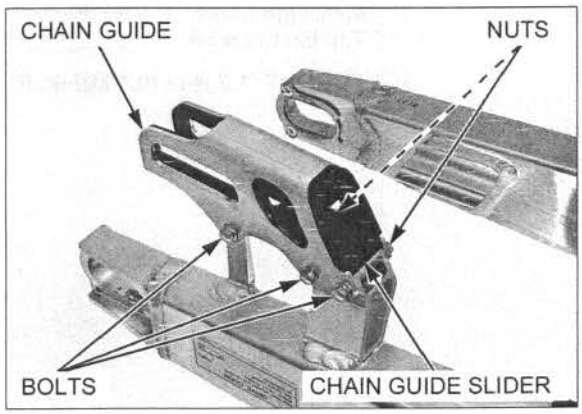

INSTALLATION

Apply a thin coat of grease to the swingarm pivot bolt sliding surface.

Install the swingarm between the engine and frame.
install the swingarm pivot bolt from the right side through the frame, swingarm pivot and engine.

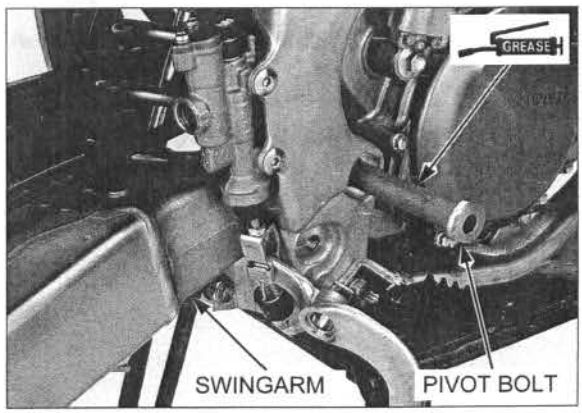

Install the washer and swingarm pivot nut.
Tighten the swingarm pivot nut to the specified torque.

TORQUE: 88 N·m (9.0 kgf·m, 65 lbf·ft)

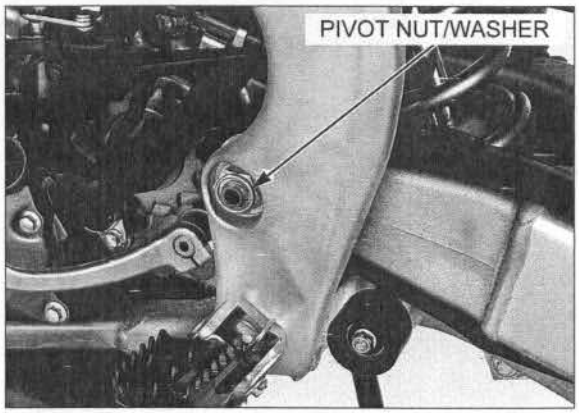

Do not twist the brake hose.

Install the rear brake caliper/bracket assembly to the swingarm by aligning the bracket tab with the slide rail of the swingarm.

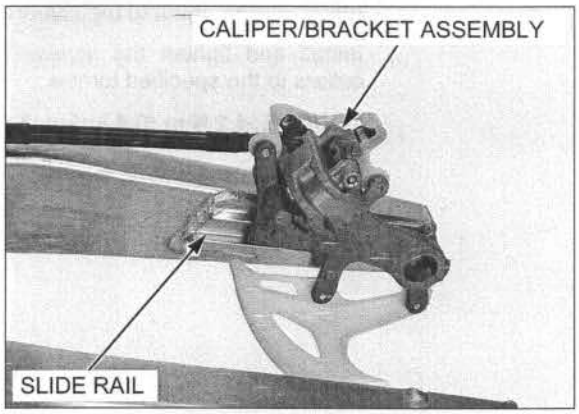

Install the brake hose guides and screws.
Tighten the screws to the specified torque.

TORQUE: 1.2 N·m (0.1 kgf·m, 0.9 lbf·ft)

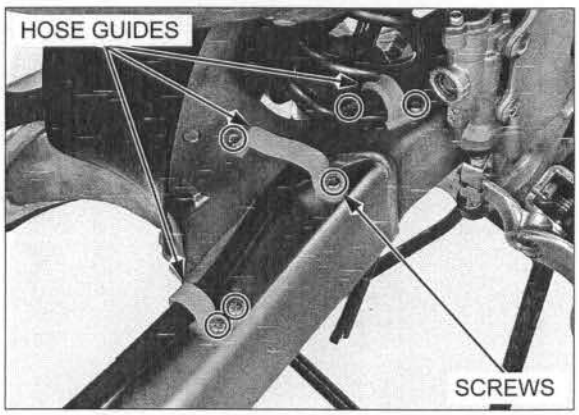

Apply molybdenum oil solution to the shock arm nut (swingarm side) threads and seating surface.

Install the shock arm bolt, washer and nut (swingarm side).
Tighten the nut to the specified torque.

TORQUE: 53 N·m (5.4 kgf·m, 39 lbf·ft)

Install the following:

- Brake pedal pivot bolt (page 16-30)
- Drive chain (page 4-20)
- Rear wheel (page 15-13)

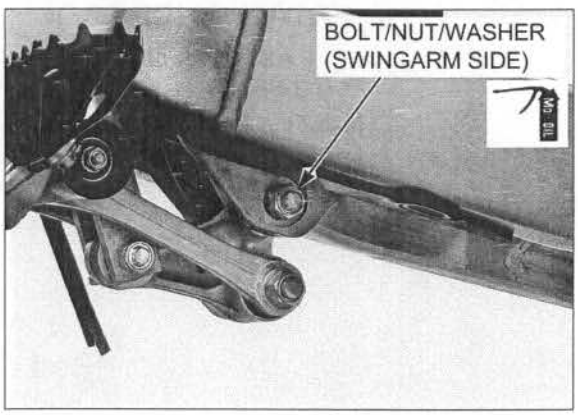

16. HYDRAULIC BRAKE

COMPONENT LOCATION

FRONT:

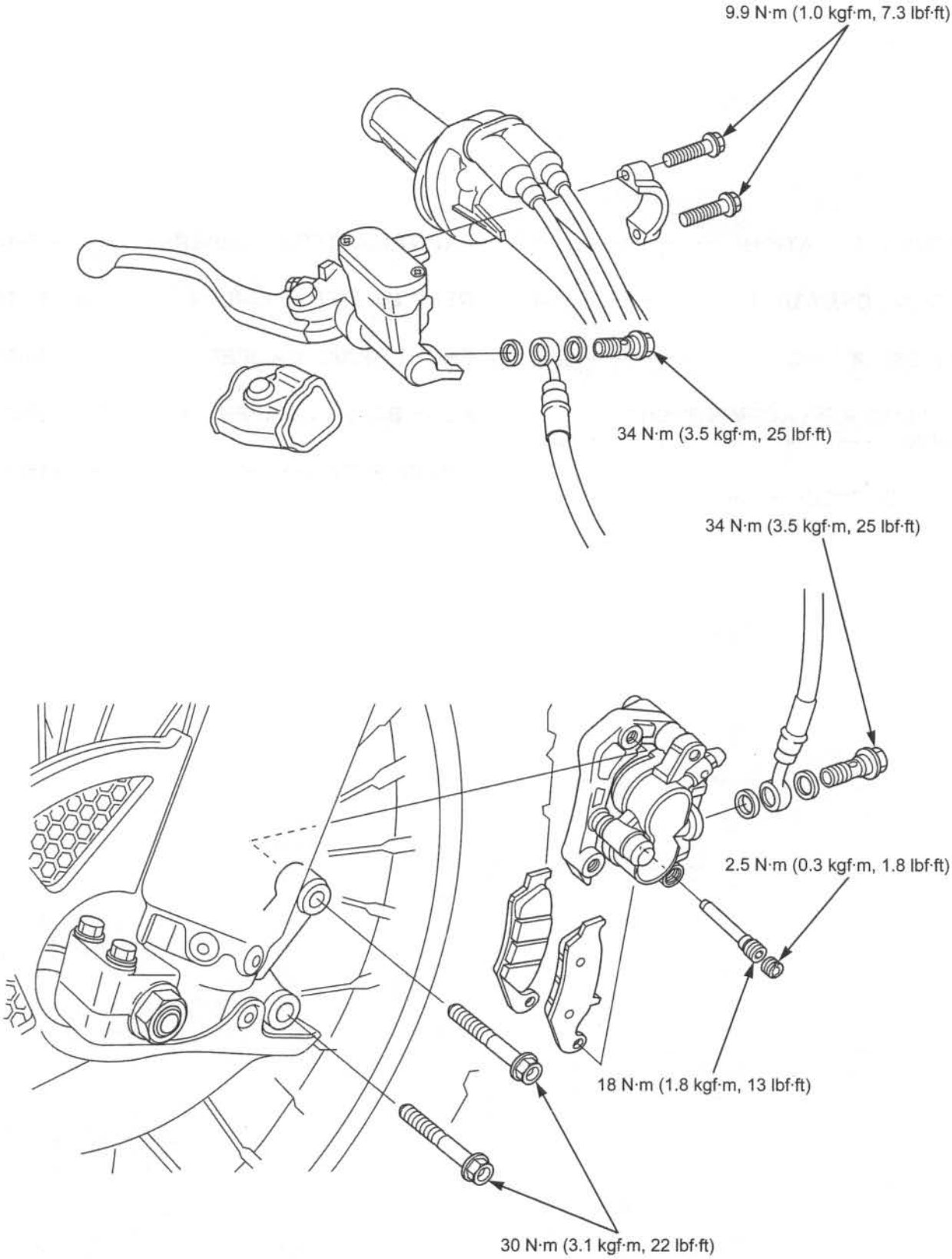

REAR:

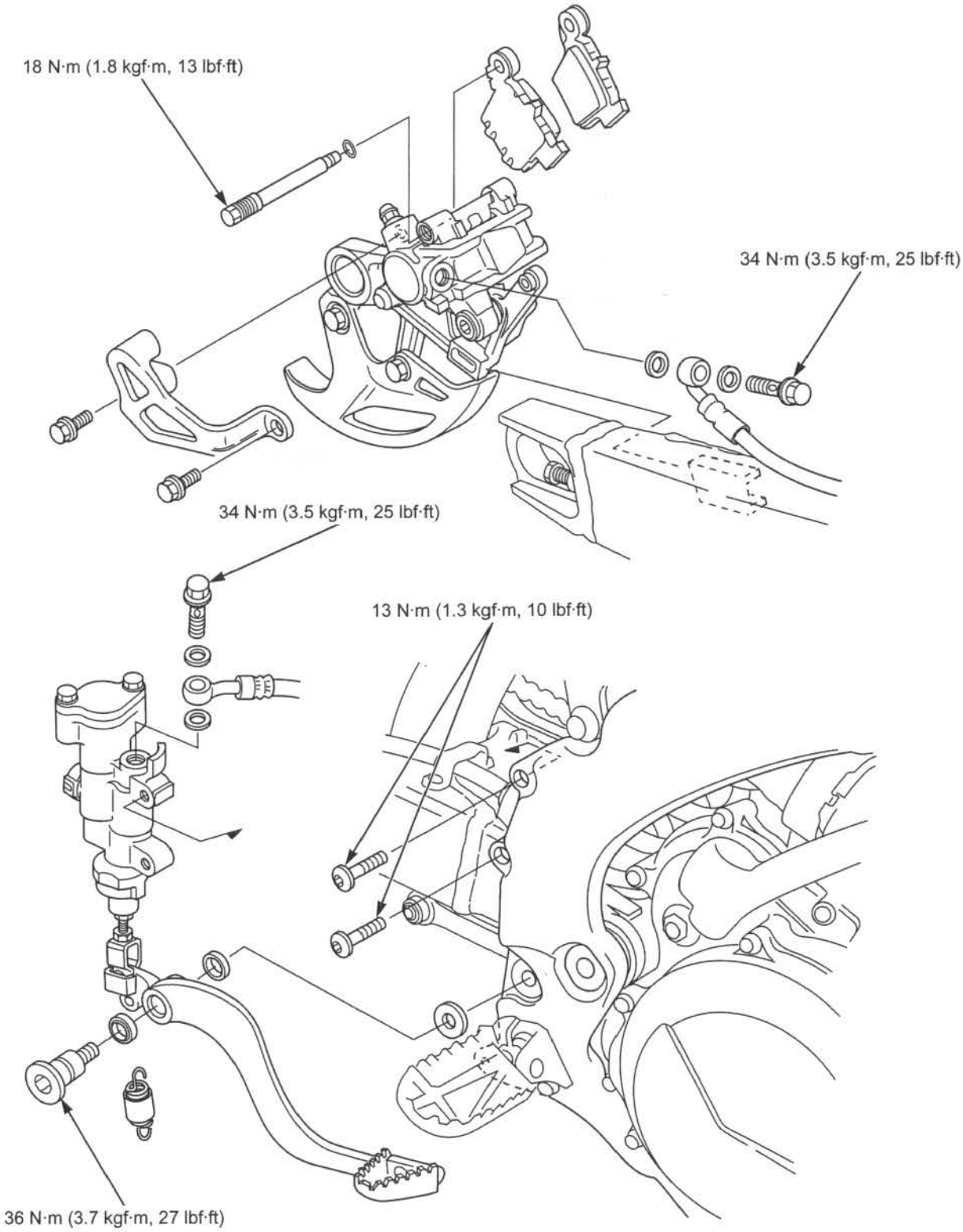
18 N·m (1.8 kgf·m, 13 lbf·ft)
34 N·m (3.5 kgf·m, 25 lbf·ft)
34 N·m (3.5 kgf·m, 25 lbf·ft)
13 N·m (1.3 kgf·m, 10 lbf·ft)
36 N·m (3.7 kgf·m, 27 lbf·ft)

SERVICE INFORMATION

GENERAL

⚠CAUTION

Frequent inhalation of brake pad dust, regardless of material composition could be hazardous to your health.
- Avoid breathing dust particles.
- Never use an air hose or brush to clean brake assemblies. Use an OSHA-approved vacuum cleaner.

NOTICE

Spilled brake fluid will severely damage instrument lenses and painted surfaces. It is also harmful to some rubber parts. Be careful whenever you remove the reservoir cap; make sure the front reservoir is horizontal first.

- A contaminated brake disc or pad reduces stopping power. Discard contaminated pads and clean a contaminated disc with high quality brake degreasing agent.
- Check the brake system by applying the brake lever or pedal after the air bleeding.
- Never allow contaminants (dirt, water, etc.) to get into an open reservoir.
- Once the hydraulic system has been opened, or if the brake feels spongy the system must be bled.
- Always use fresh DOT 4 brake fluid from a sealed container when servicing the system. Do not mix different types of fluid, they may not be compatible.
- Always check brake operation before riding the motorcycle.

SPECIFICATIONS

Unit: mm (in)

ITEM		STANDARD	SERVICE LIMIT
Front	Brake fluid	DOT 4	–
	Brake pad wear indicator	–	1.0 (0.04)
	Brake disc thickness	2.8 – 3.0 (0.11 – 0.12)	2.5 (0.10)
	Brake disc warpage	–	0.15 (0.006)
	Master cylinder I.D.	11.000 (0.4331)	11.050 (0.4350)
	Master piston O.D.	10.971 (0.4319)	10.840 (0.4268)
	Caliper cylinder I.D.	27.025 (1.0640)	27.060 (1.0654)
	Caliper piston O.D.	26.968 (1.0617)	26.853 (1.0572)
Rear	Brake fluid	DOT 4	–
	Brake pad wear indicator	–	1.0 (0.04)
	Brake disc thickness	3.8 – 4.0 (0.15 – 0.16)	3.5 (0.14)
	Brake disc warpage	–	0.15 (0.006)
	Master cylinder I.D.	9.547 (0.3759)	9.575 (0.3770)
	Master piston O.D.	9.491 (0.3737)	9.465 (0.3726)
	Caliper cylinder I.D.	22.650 (0.8917)	22.712 (0.8942)
	Caliper piston O.D.	22.620 (0.8905)	22.573 (0.8887)
	Brake pedal height	79.6 (3.13)	–

TORQUE VALUES

Brake hose oil bolt	34 N·m (3.5 kgf·m, 25 lbf·ft)	
Brake lever pivot nut	5.9 N·m (0.6 kgf·m, 4.4 lbf·ft)	
Brake lever pivot bolt	1.0 N·m (0.1 kgf·m, 0.7 lbf·ft)	Apply silicone grease to the sliding surface.
Brake lever adjuster lock nut	5.9 N·m (0.6 kgf·m, 4.4 lbf·ft)	
Front master cylinder reservoir cover screw	1.0 N·m (0.1 kgf·m, 0.7 lbf·ft)	
Front master cylinder holder bolt	9.9 N·m (1.0 kgf·m, 7.3 lbf·ft)	
Front brake caliper mounting bolt	30 N·m (3.1 kgf·m, 22 lbf·ft)	Apply locking agent to the threads.
Caliper bleed valve	5.4 N·m (0.6 kgf·m, 4.0 lbf·ft)	
Front brake disc cover bolt	13 N·m (1.3 kgf·m, 10 lbf·ft)	
Rear master cylinder reservoir cover bolt	1.0 N·m (0.1 kgf·m, 0.7 lbf·ft)	
Rear master cylinder mounting bolt	13 N·m (1.3 kgf·m, 10 lbf·ft)	
Front brake caliper bracket pin bolt	22 N·m (2.2 kgf·m, 16 lbf·ft)	Apply locking agent to the threads.
Rear brake caliper bracket pin bolt	12 N·m (1.2 kgf·m, 9 lbf·ft)	Apply locking agent to the threads.
Front brake caliper pin bolt	22 N·m (2.2 kgf·m, 16 lbf·ft)	Apply locking agent to the threads.
Rear brake caliper pin bolt	27 N·m (2.8 kgf·m, 20 lbf·ft)	
Brake caliper pad pin	18 N·m (1.8 kgf·m, 13 lbf·ft)	
Front brake caliper pad pin plug	2.5 N·m (0.3 kgf·m, 1.8 lbf·ft)	
Brake pedal pivot bolt	36 N·m (3.7 kgf·m, 27 lbf·ft)	Apply locking agent to the threads (page 16-30).

TOOL

Snap ring pliers
07914-SA50001

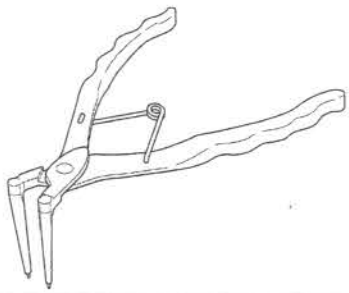

TROUBLESHOOTING

Brake lever/pedal soft or spongy
- Air in hydraulic system
- Leaking hydraulic system
- Contaminated brake pads/disc
- Worn caliper piston seals
- Worn master cylinder piston cups
- Worn brake pads/disc
- Contaminated caliper
- Caliper bracket not sliding properly (rear)
- Low brake fluid level
- Clogged fluid passage
- Warped/deformed brake disc
- Sticking/worn caliper piston
- Sticking/worn master cylinder piston
- Contaminated master cylinder
- Bent brake lever/pedal

Brake lever/pedal hard
- Clogged/restricted brake system
- Sticking/worn caliper piston
- Caliper bracket not sliding properly (rear)
- Clogged/restricted fluid passage
- Worn caliper piston seals
- Sticking/worn master cylinder piston
- Bent brake lever/pedal

Brake drags
- Contaminated brake pads/disc
- Misaligned wheel
- Clogged/restricted brake hose joint bolt and eyelet
- Warped/deformed brake disc
- Caliper bracket not sliding properly (rear)
- Clogged/restricted brake hydraulic system
- Sticking/worn caliper piston
- Clogged master cylinder port
- Sticking master cylinder piston

BRAKE FLUID REPLACEMENT/AIR BLEEDING

- A contaminated brake disc or pad reduces stopping power. Discard contaminated pads and clean a contaminated disc with high quality brake degreasing agent.
- Once the hydraulic system has been opened, or if the brake feels spongy the system must be bled.
- When using a commercially available brake bleeder, follow the manufacturer's operating instruction.

BRAKE FLUID DRAINING

Do not allow foreign material to enter the system when filling the reservoir.

Check the master cylinder parallel to the ground, before removing the reservoir cover.

Front: Remove the screws, reservoir cover and diaphragm.

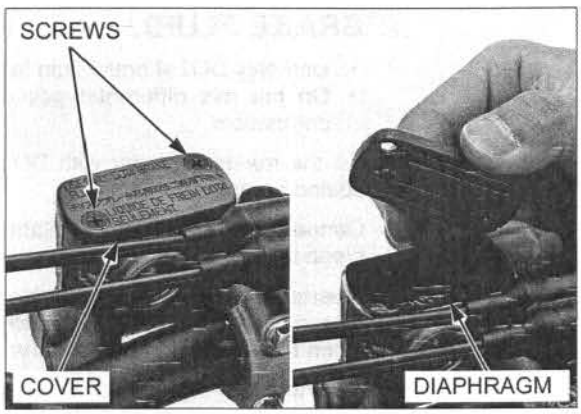

Rear: Remove the bolts, reservoir cover, set plate and diaphragm.

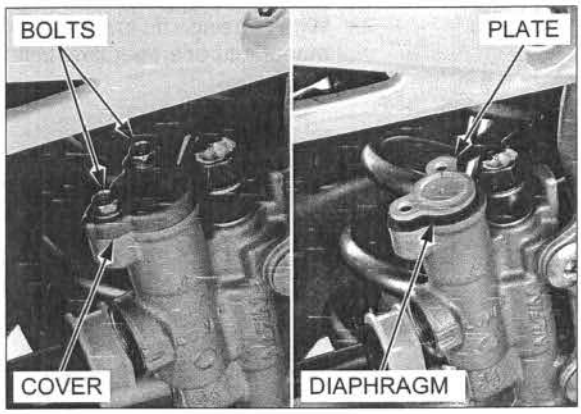

Rear: Remove the bolts and rear brake caliper guard.

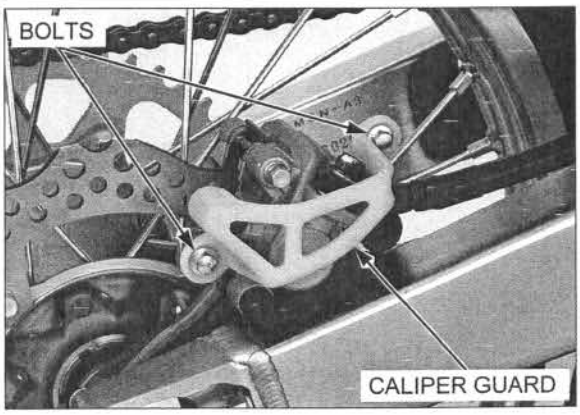

Connect a bleed hose to the bleed valve.
Loosen the bleed valve and pump the brake lever or pedal.
Stop operating the brake when no more fluid flows out of the bleed valve.

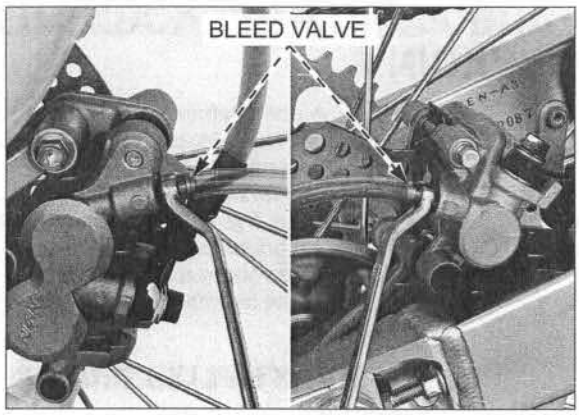

BRAKE FLUID FILLING/AIR BLEEDING

- Use only DOT 4 brake fluid from a sealed container.
- Do not mix different types of fluid. They are not compatible.

Fill the master cylinder with DOT 4 brake fluid from a sealed container.

Connect a commercially available brake bleeder to the bleed valve.

Operate the brake bleeder and loosen the bleed valve. If an automatic refill system is not used, add brake fluid when the fluid level in the reservoir is low.

- Check the fluid level often while bleeding to prevent air from being pumped into the system.
- When using a brake bleeding tool, follow the manufacturer's operating instructions.

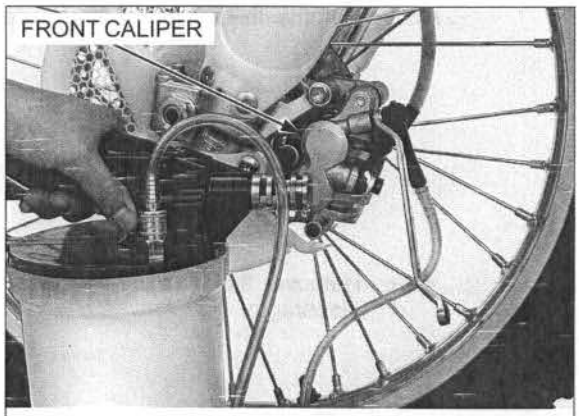

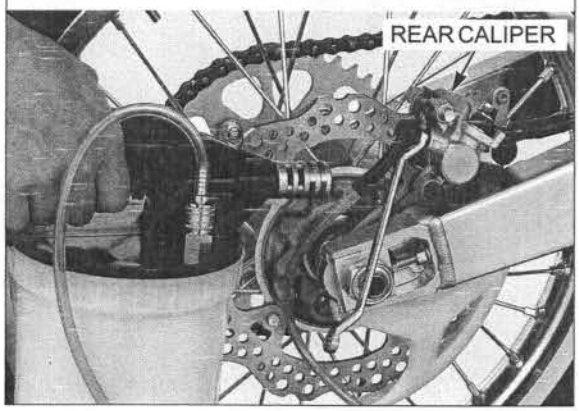

Perform the bleeding procedure until the system is completely flushed/bled.

- If air enters the bleeder from around the bleed valve threads, seal the threads with teflon tape.

Close the bleed valve and operate the brake lever or pedal.
If it still feels spongy, bleed the system again.

Operate the brake lever or pedal. If it still feels spongy, bleed the system again.

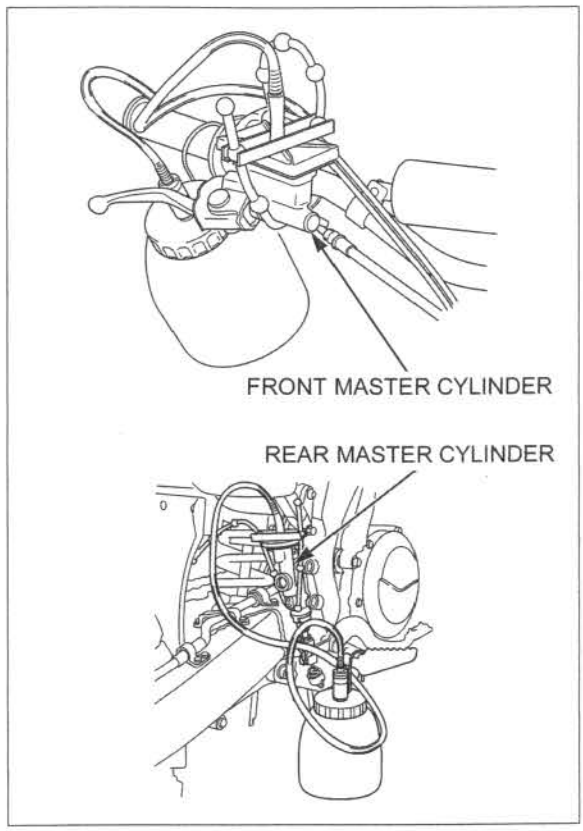

If a brake bleeder is not available, perform the following procedures:

Fill the reservoir with DOT 4 brake fluid from a sealed container.

Wrap a clean shop towel around the reservoir to prevent brake fluid spilling.

Connect a bleed hose to the bleed valve.

Pressurize the system with the brake lever or pedal until there are no air bubbles in the brake fluid flowing out of the small hole in the reservoir and lever or pedal resistance is felt.

1. Squeeze the brake lever or push the brake pedal, open the bleed valve 1/2 turn and then close the bleed valve.

NOTE:
Do not release the brake lever or pedal until the bleed valve has been closed.

2. Release the brake lever or pedal slowly, and wait several seconds after it reaches the end of its travel.
3. Repeat steps 1 to 2 until there are no air bubbles in the bleed hose.

After bleeding air completely, tighten the bleed valves to the specified torque.

TORQUE: 5.4 N·m (0.6 kgf·m, 4.0 lbf·ft)

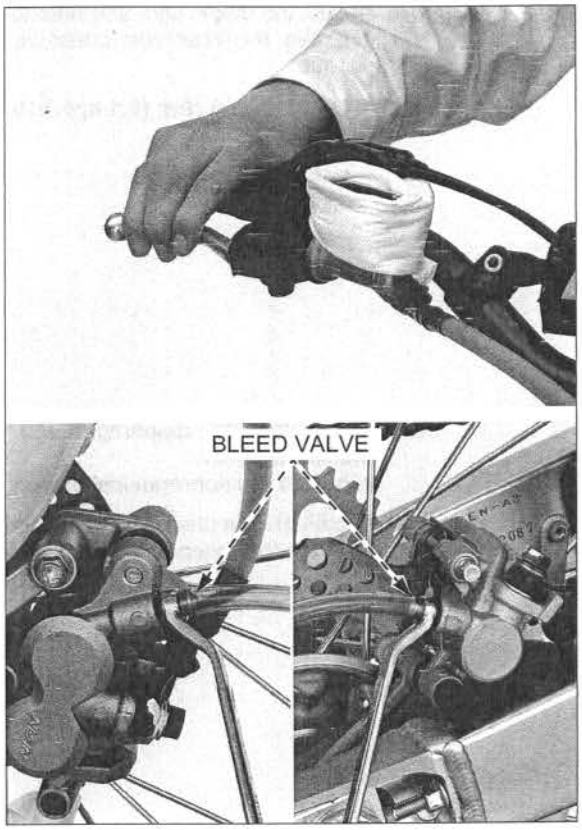

For the rear brake, install the brake caliper guard, and tighten the bolts securely.

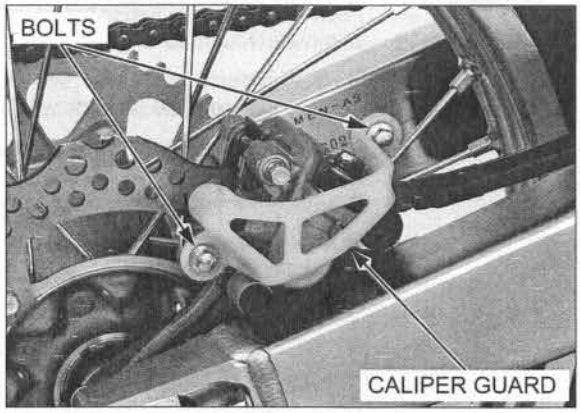

Fill each reservoir with DOT 4 brake fluid to the upper level line.

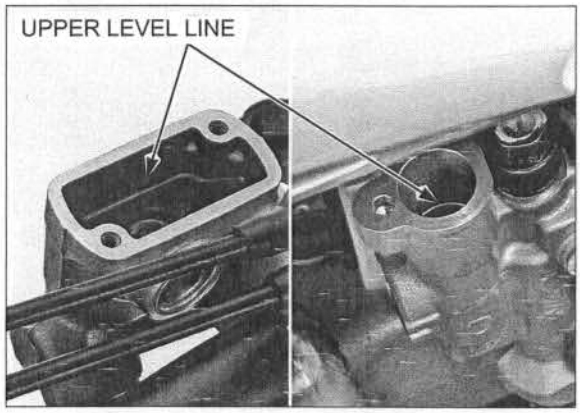

Front: Install the diaphragm and reservoir cover.
Tighten the reservoir cover screws to the specified torque.

TORQUE: 1.0 N·m (0.1 kgf·m, 0.7 lbf·ft)

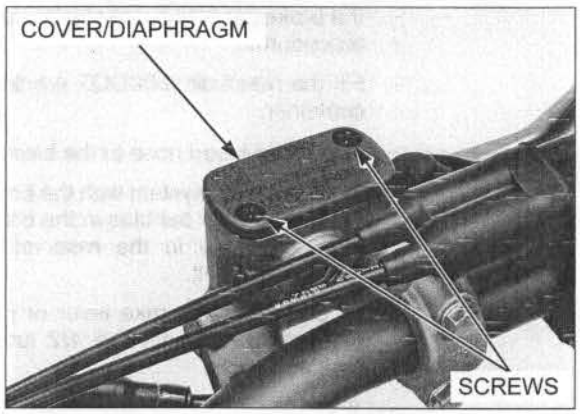

Rear: Straighten the diaphragm and install it to the rear master cylinder.
Check the diaphragm installation as shown.

Install the set plate and reservoir cover.
Tighten the reservoir cover bolts to the specified torque.

TORQUE: 1.0 N·m (0.1 kgf·m, 0.7 lbf·ft)

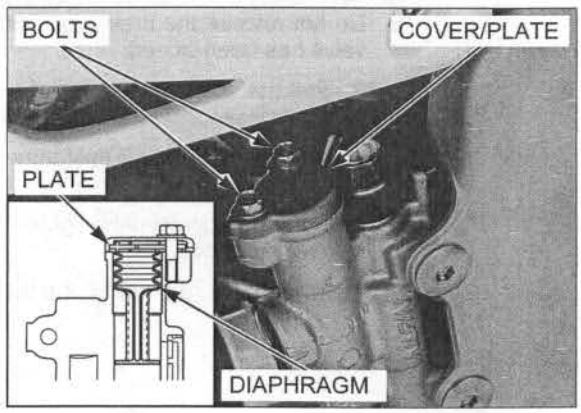

BRAKE PADS/DISC

FRONT BRAKE PADS REPLACEMENT

Always replace the brake pads in pairs to assure even disc pressure.

Push the caliper pistons all the way in to allow installation of new brake pads.

NOTE:

- Check the brake fluid level in the brake master cylinder reservoir as this operation causes the level to rise.

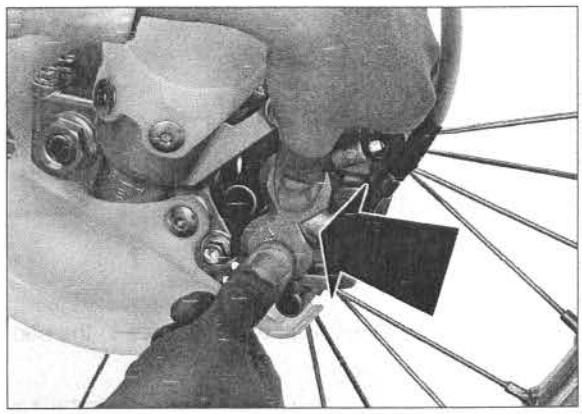

Remove the pad pin plug and loosen the pad pin.

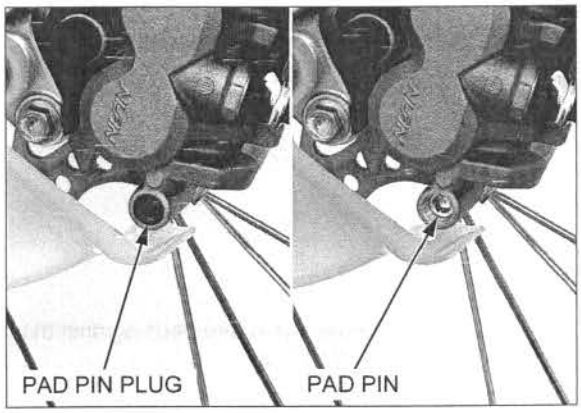

Remove the brake caliper mounting bolts and brake caliper/bracket assembly.

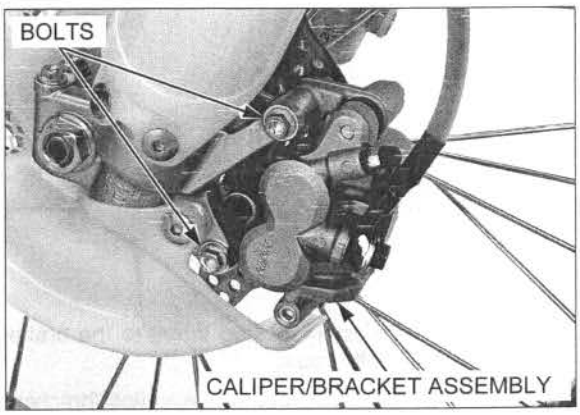

Remove the pad pin and brake pads.

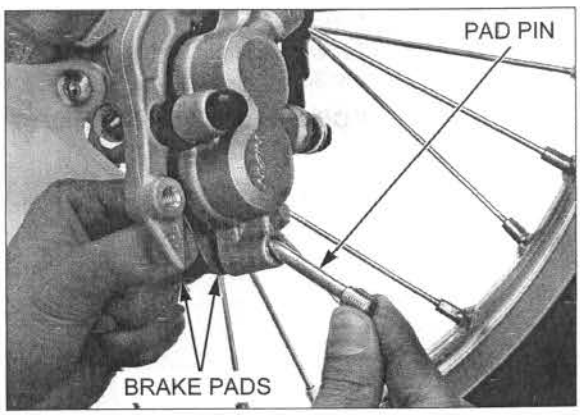

Clean the inside of the brake caliper especially around the caliper pistons.

Make sure the pad spring is installed correctly.

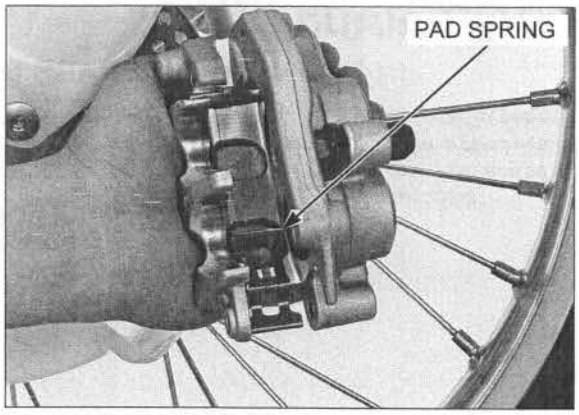

Install new brake pads to the pad retainer securely.

NOTE:

- Discard contaminated pads and clean a contaminated disc with high quality brake degreasing agent.

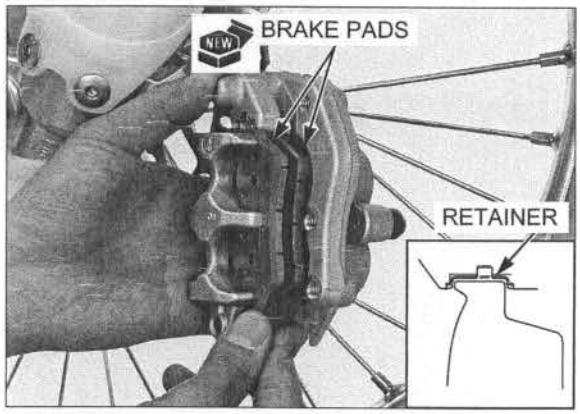

Push the brake pads against the pad spring, then install the pad pin.

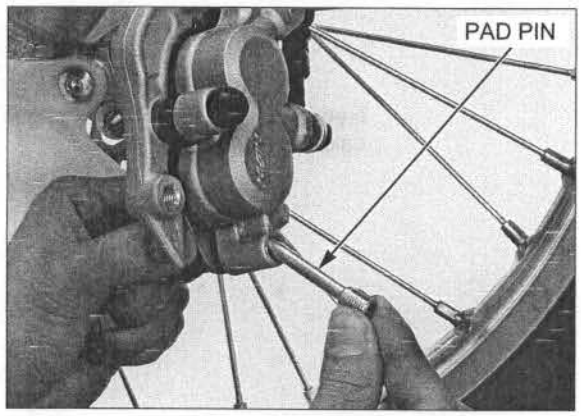

Apply locking agent to the brake caliper mounting bolt threads.

Install the brake caliper/bracket assembly to the fork leg.

Install and tighten the brake caliper mounting bolts to the specified torque.

TORQUE: 30 N·m (3.1 kgf·m, 22 lbf·ft)

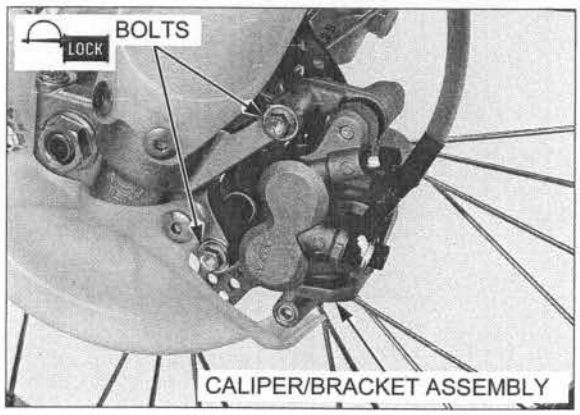

Tighten the pad pin to the specified torque.

TORQUE: 18 N·m (1.8 kgf·m, 13 lbf·ft)

Install and tighten the pad pin plug to the specified torque.

TORQUE: 2.5 N·m (0.3 kgf·m, 1.8 lbf·ft)

Apply the brake lever to force the caliper piston out of the caliper.

Rotate the wheel by hand, and check the brake operation.

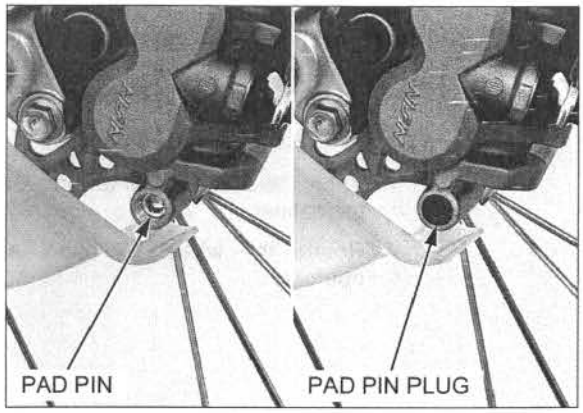

REAR BRAKE PADS REPLACEMENT

Always replace the brake pads in pairs to assure even disc pressure.

Push the caliper piston all the way in to allow installation of new brake pads.

NOTE:

- Check the brake fluid level in the brake master cylinder reservoir as this operation causes the level to rise.

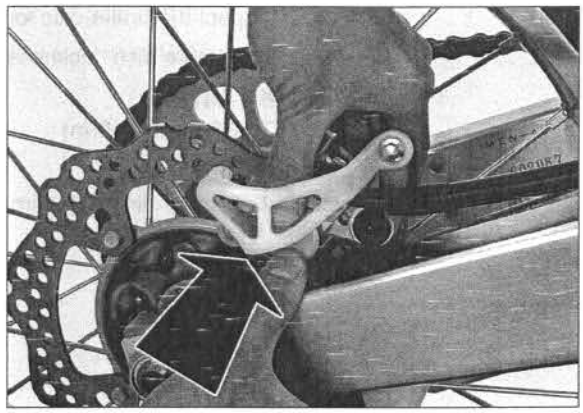

Remove the pad pin and brake pads.

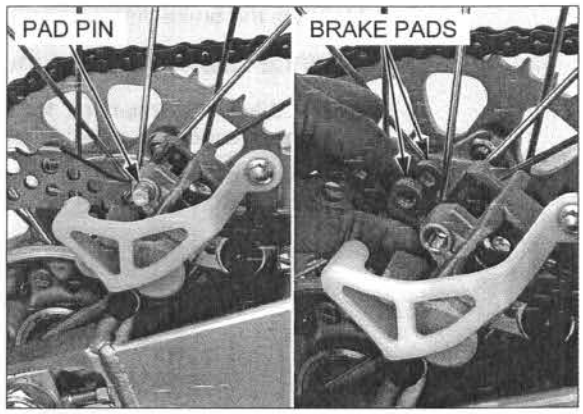

Install new brake pads to the pad retainer and pad spring securely.

NOTE:

- Discard contaminated pads and clean a contaminated disc with high quality brake degreasing agent.

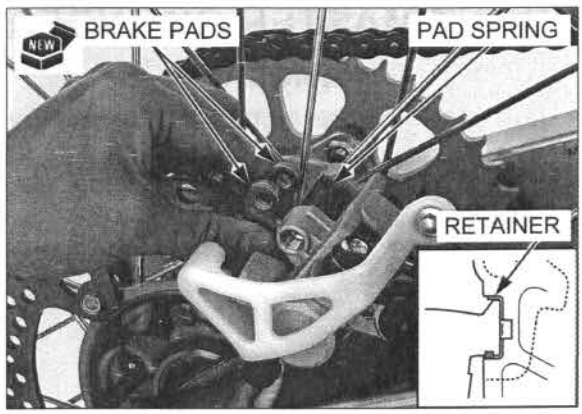

Install a new O-ring into the pad pin groove.
Install the pad pin while pushing in the brake pads against the pad spring.
Tighten the pad pin to the specified torque.

TORQUE: 18 N·m (1.8 kgf·m, 13 lbf·ft)

Apply the brake pedal to force the caliper piston out of the caliper.

Rotate the wheel by hand, and check the brake operation.

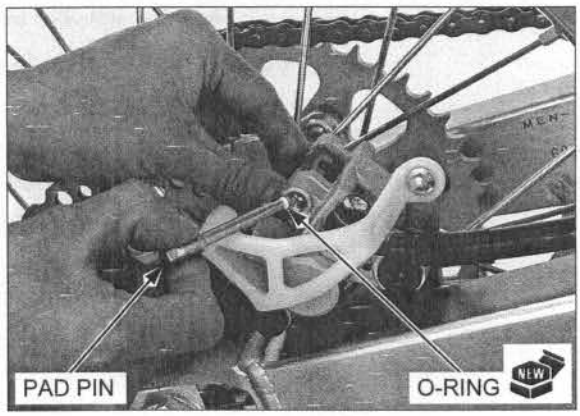

BRAKE DISC INSPECTION

Visually inspect the brake disc for damage or cracks.

Measure the brake disc thickness with a micrometer.

SERVICE LIMITS:
FRONT: 2.5 mm (0.10 in)
REAR: 3.5 mm (0.14 in)

Replace the brake disc if the smallest measurement is less than the service limit.

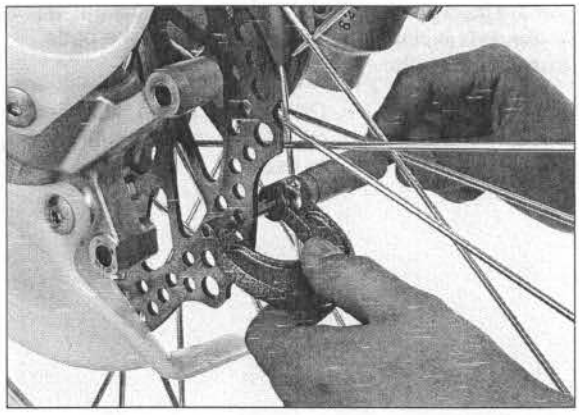

Measure the brake disc warpage with a dial indicator.

SERVICE LIMIT: 0.15 mm (0.006 in)

Check the wheel bearings for excessive play, if the warpage exceeds the service limit.

Replace the brake disc if the wheel bearings are normal.

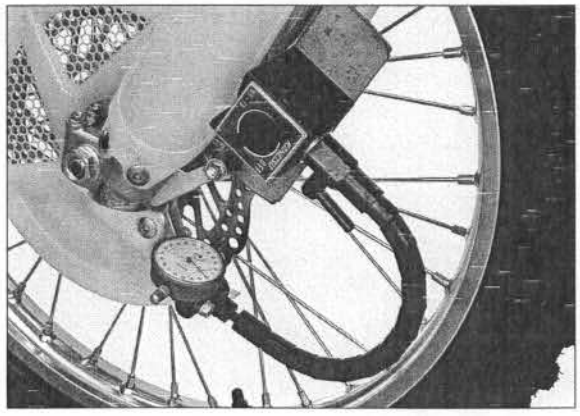

FRONT MASTER CYLINDER

REMOVAL

Drain the front brake hydraulic system (page 16-7).

When removing the brake hose bolt, cover the end of the hose to prevent contamination. Secure the hose to prevent brake fluid from leaking out.

Remove the brake hose oil bolt, sealing washers and brake hose eyelet.

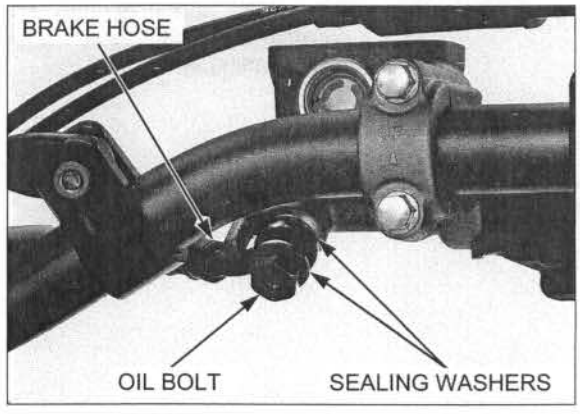

Remove the bolts, holder and master cylinder assembly.

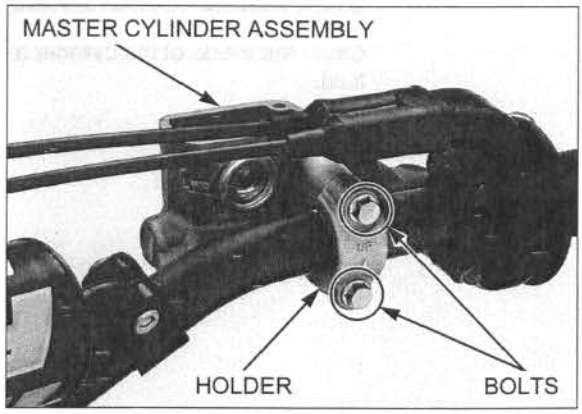

DISASSEMBLY

Remove the dust cover.
Remove the pivot nut and bolt.

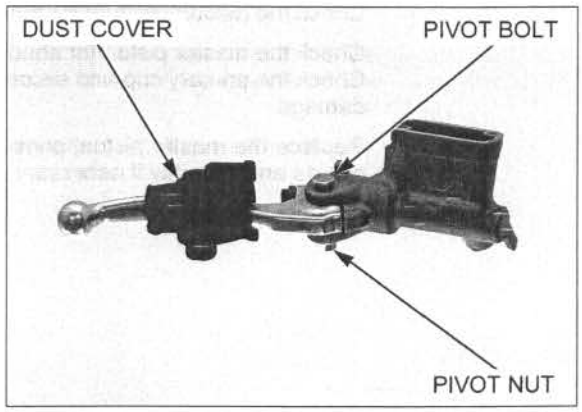

Be careful not to damage the boot.

Release the boot from the knocker arm.

Remove the brake lever assembly, spring and push rod from the master cylinder.

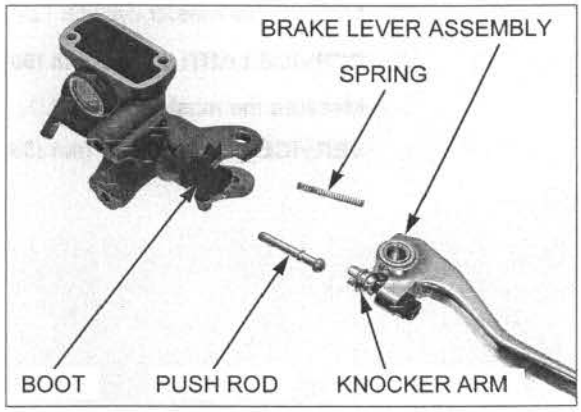

Be careful not to damage the boot.

Remove the boot.

Remove the snap ring from the master cylinder using the special tool.

TOOL:
Snap ring pliers **07914-SA50001**

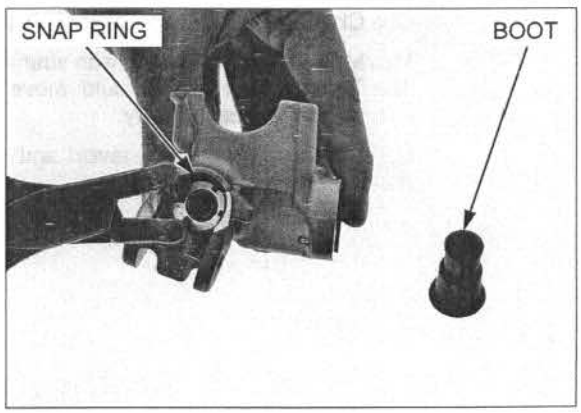

Remove the washer, master piston and spring.

Clean the inside of the cylinder and reservoir with brake fluid.

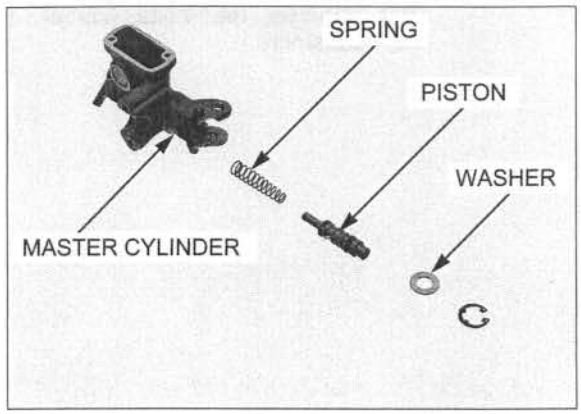

INSPECTION

Check the master cylinder for abnormal scratches.

Check the master piston for abnormal scratches.
Check the primary cup and secondary cup for fatigue or damage.

Replace the master piston, primary cup and secondary cup as an assembly if necessary.

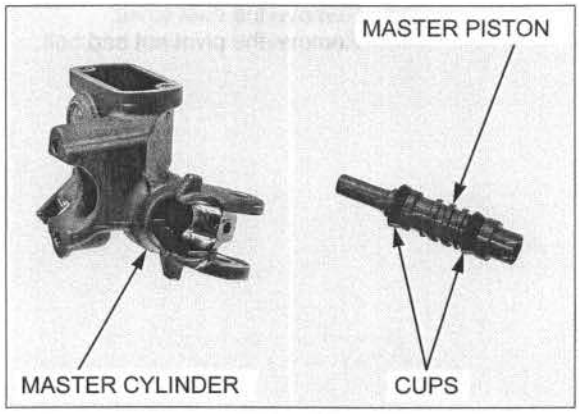

Measure the master cylinder I.D.

SERVICE LIMIT: 11.050 mm (0.4350 in)

Measure the master piston O.D.

SERVICE LIMIT: 10.840 mm (0.4268 in)

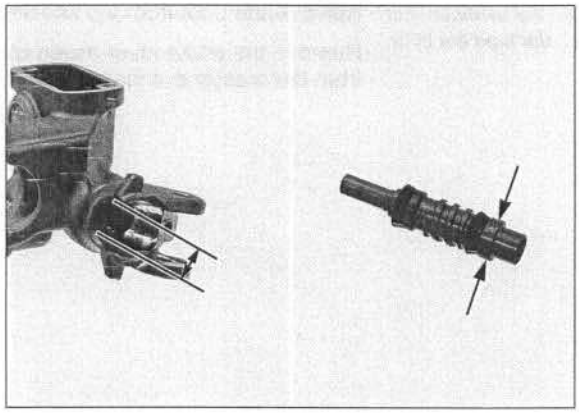

Check the brake lever for bend or damage.

Move the knocker arm with your finger.
The knocker arm should move smoothly and freely without excessive play.

Replace the brake lever and knocker arm as an assembly if necessary.

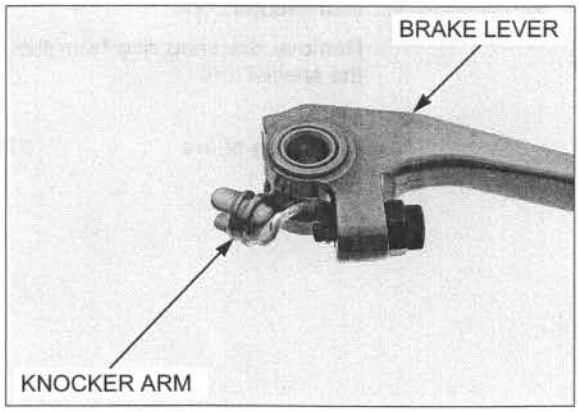

ASSEMBLY

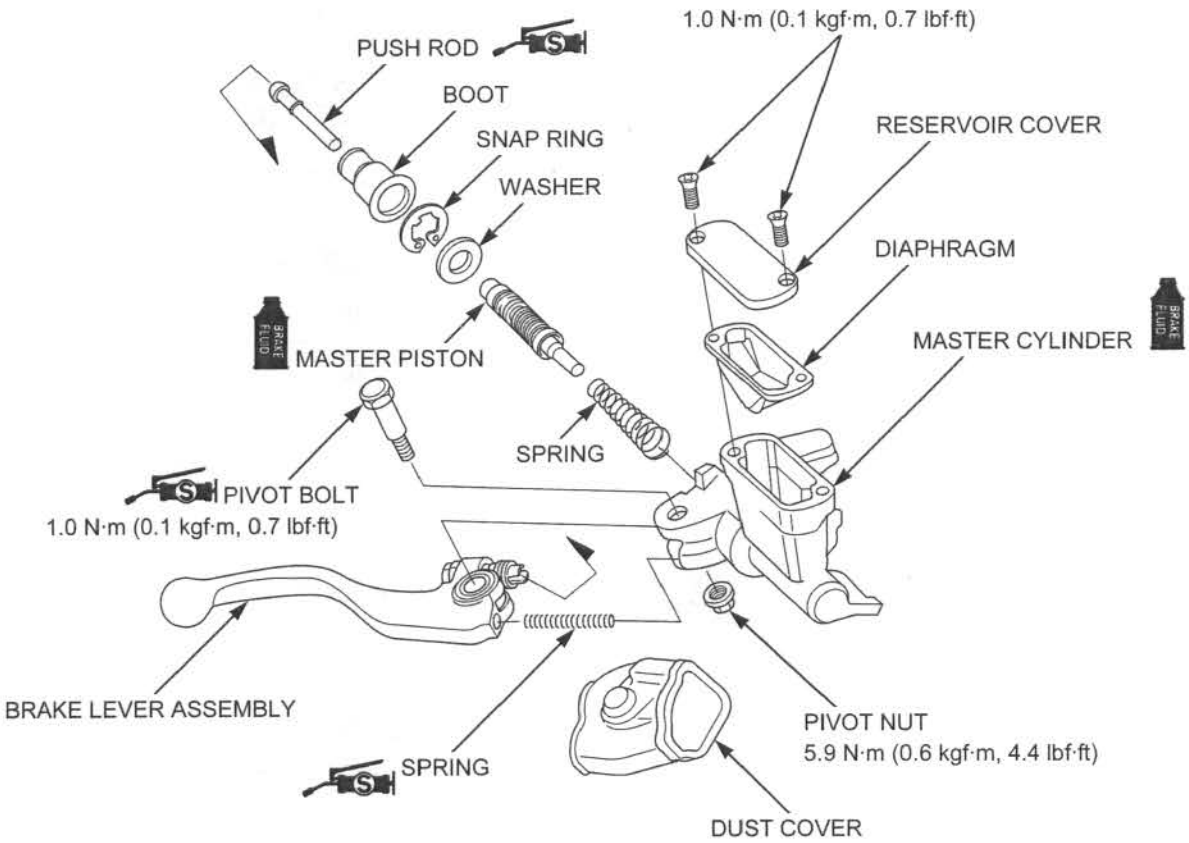

Keep the piston, cups, spring, snap ring and boot as a set; do not replace the parts individually.

Apply clean brake fluid to the master piston outer surface and master cylinder inner surface.

When installing the cups, do not allow the lips to turn inside out.

Install the spring to the master piston.
Install the master piston assembly into the master cylinder.
Install the washer.

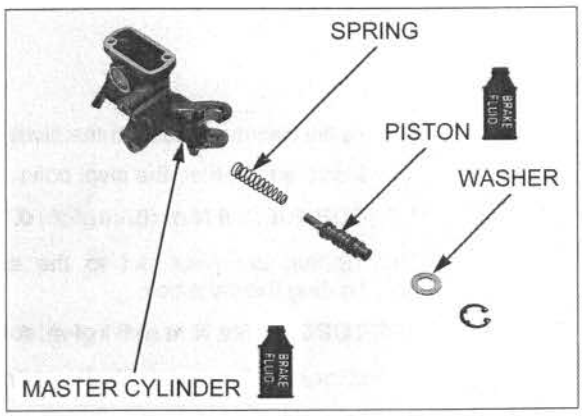

Be certain the snap ring is firmly seated in the groove

Install the snap ring to the master cylinder using the special tool.

TOOL:
Snap ring pliers **07914-SA50001**

Install the boot to the master cylinder until it is fully seated.

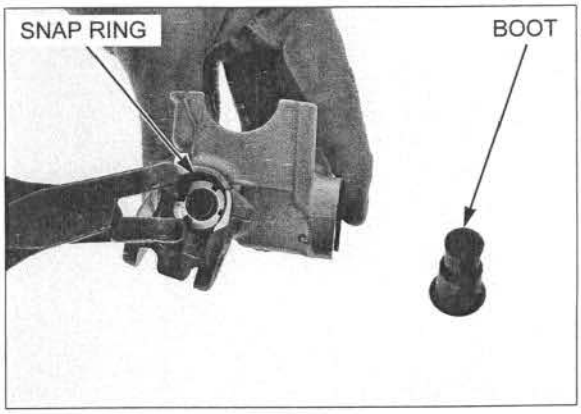

Apply silicone grease to the contact area of the push rod and brake lever adjusting bolt tip.

Note the direction of the push rod. Make sure the tab on the push rod is seated on the boot.

Install the push rod to the hollow of the master piston securely.

Install the brake lever assembly while aligning the push rod end with the knocker arm.

Set the boot to the knocker arm groove securely.

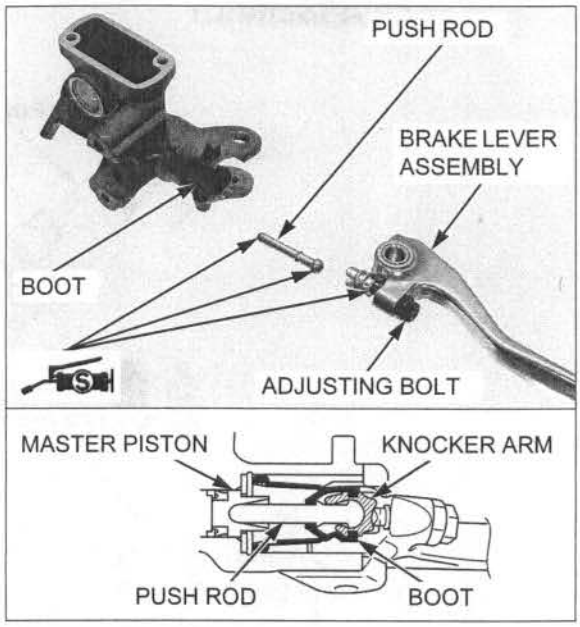

Apply silicone grease to the spring both ends, and install it between the master cylinder and brake lever assembly.

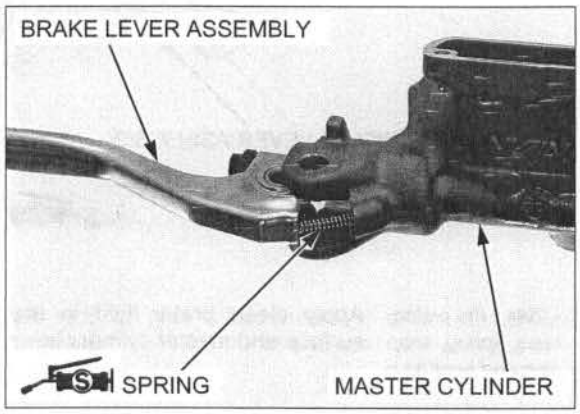

Apply silicone grease to the pivot bolt sliding surface.

Install and tighten the pivot bolt to the specified torque.

TORQUE: 1.0 N·m (0.1 kgf·m, 0.7 lbf·ft)

Tighten the pivot nut to the specified torque while holding the pivot bolt.

TORQUE: 5.9 N·m (0.6 kgf·m, 4.4 lbf·ft)

Check the brake lever for smooth operation.

Install the dust cover.

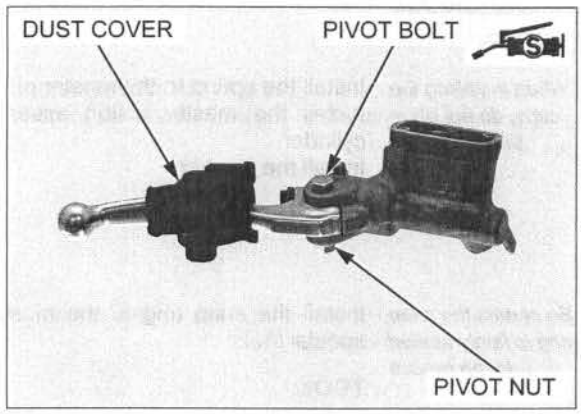

INSTALLATION

Place the master cylinder assembly on the handlebar. Align the end of the master cylinder with the paint mark on the handlebar.

Install the master cylinder holder with the "UP" mark facing up.
Tighten the upper bolt first, then the lower bolt to the specified torque.

TORQUE: 9.9 N·m (1.0 kgf·m, 7.3 lbf·ft)

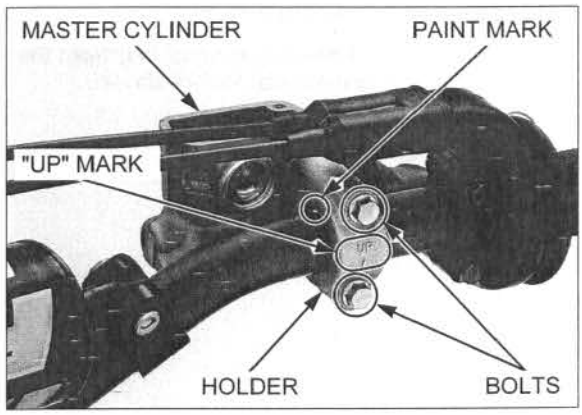

Install the brake hose eyelet with the brake hose oil bolt and new sealing washers.
Push the brake hose eyelet joint against the stopper, then tighten the brake hose oil bolt to the specified torque.

TORQUE: 34 N·m (3.5 kgf·m, 25 lbf·ft)

Fill the reservoir to the upper level and bleed the front brake system (page 16-8).

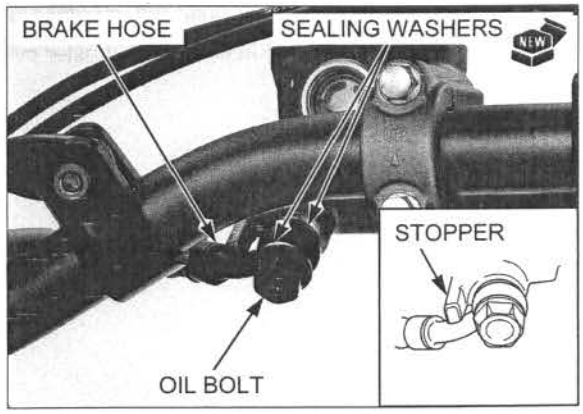

REAR MASTER CYLINDER

REMOVAL

Drain the rear brake hydraulic system (page 16-7).
Remove the brake pedal (page 16-29).

When removing the brake hose bolt, cover the end of the hose to prevent contamination. Secure the hose to prevent brake fluid from leaking out.

Remove the brake hose oil bolt, sealing washers and brake hose eyelet.

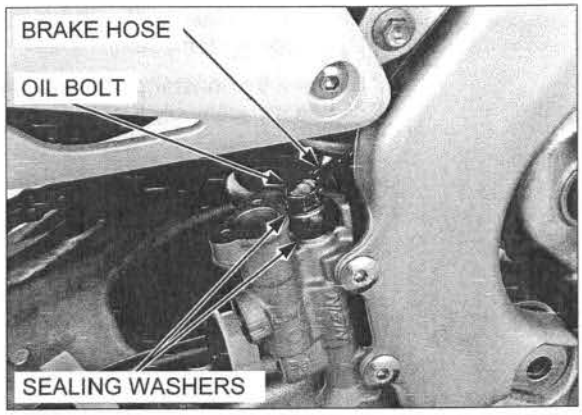

Remove the master cylinder mounting bolts and rear master cylinder.

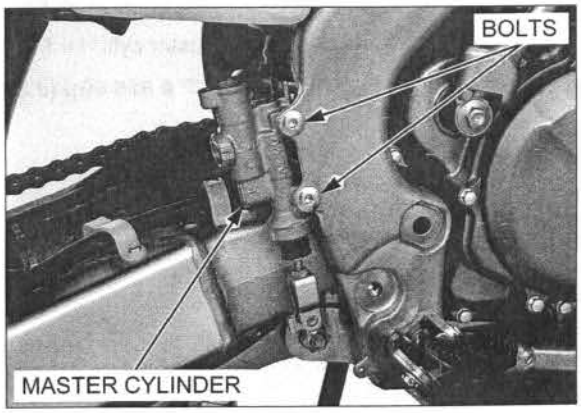

DISASSEMBLY

Be careful not to damage the boot.

Remove the boot.

Remove the snap ring from the master cylinder using the special tool as shown.

TOOL:
Snap ring pliers **07914-SA50001**

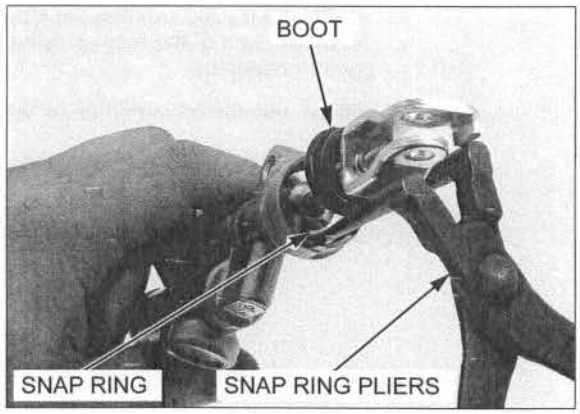

Remove the push rod, master piston and spring.

Clean the inside of the master cylinder with brake fluid.

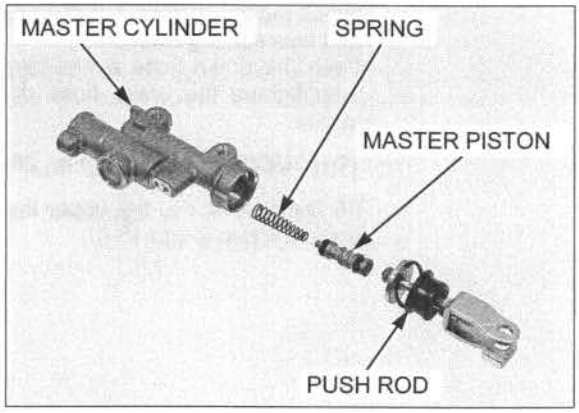

INSPECTION

Check the master cylinder for abnormal scratches.

Check the master piston for abnormal scratches.
Check the piston boot, primary cup and secondary cup for fatigue or damage.

Replace the master piston, primary cap and secondary cap as an assembly if necessary.

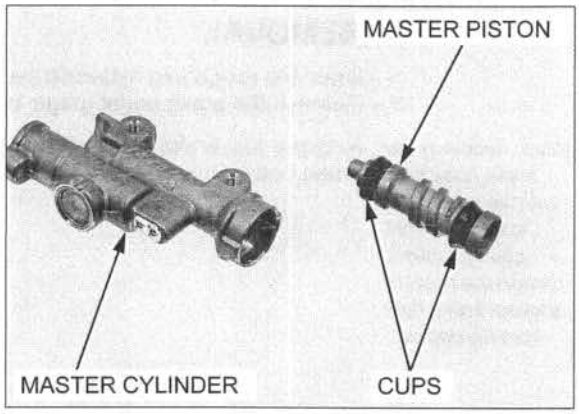

Measure the master piston O.D.

SERVICE LIMIT: 9.465 mm (0.3726 in)

Measure the master cylinder I.D.

SERVICE LIMIT: 9.575 mm (0.3770 in)

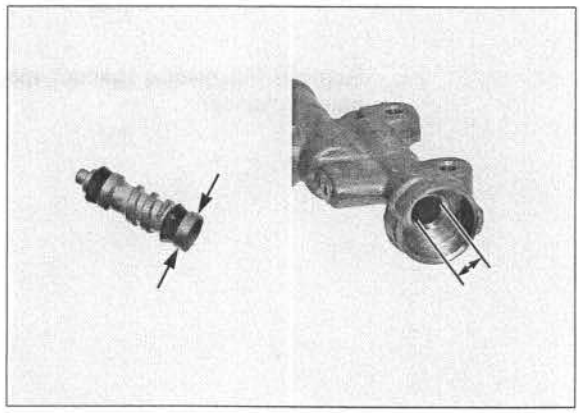

ASSEMBLY

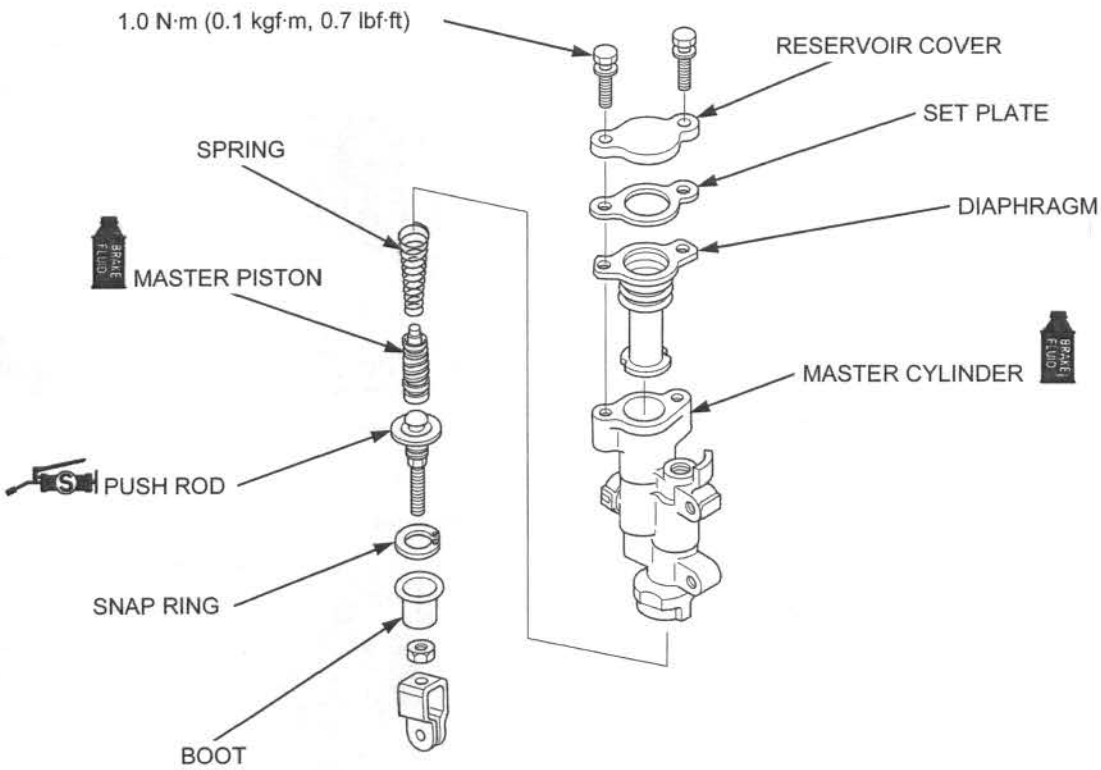

Keep the piston, cups, spring, snap ring and boot as a set; do not replace the parts individually.

Apply clean brake fluid to the master piston outer surface and master cylinder inner surface.

When installing the cups, do not allow the lips to turn inside out.

Install the spring to the master piston.
Install the master piston assembly into the master cylinder.

Apply silicone grease to the push rod rounded surface and boot fitting area.

If the push rod is disassembled, adjust the brake pedal height (page 4-26).

Install the push rod into the master cylinder.

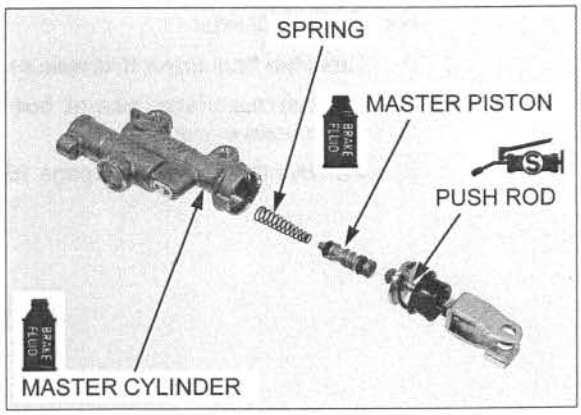

Be certain the snap ring is firmly seated in the groove.

Install the snap ring using the special tool.

TOOL:
Snap ring pliers **07914-SA50001**

Install the boot to the master cylinder securely.

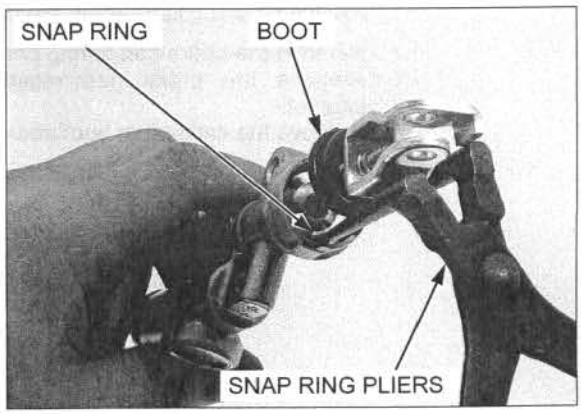

INSTALLATION

Install the master cylinder and mounting bolts.

Tighten the master cylinder mounting bolts to the specified torque

TORQUE: 13 N·m (1.3 kgf·m, 10 lbf·ft)

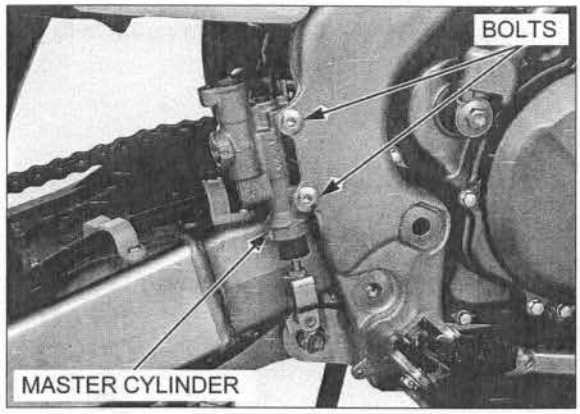

Install the brake hose eyelet with the brake hose oil bolt and new sealing washers.
Push the brake hose eyelet joint against the stopper, then tighten the brake hose oil bolt to the specified torque.

TORQUE: 34 N·m (3.5 kgf·m, 25 lbf·ft)

Install the brake pedal (page 16-30).
Fill the reservoir to the upper level, and bleed the brake system (page 16-8).

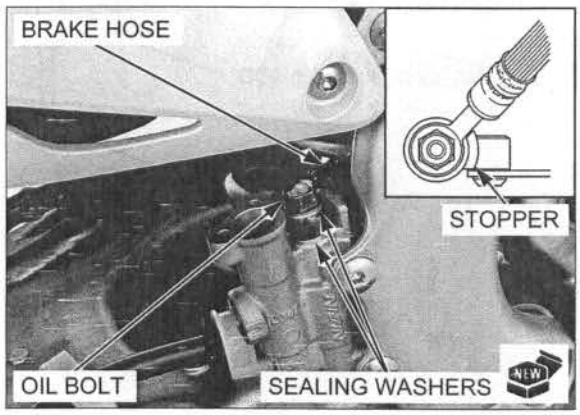

FRONT BRAKE CALIPER

REMOVAL

Drain the front brake hydraulic system (page 16-7).

Remove the brake hose oil bolt, sealing washers and brake hose eyelet.

Remove the brake pads (page 16-11).

DISASSEMBLY

Remove the caliper bracket from the brake caliper.

Remove the brake pad spring from the caliper.
Remove the brake pad retainer from the caliper bracket.
Remove the caliper pin boot and bracket pin boot.

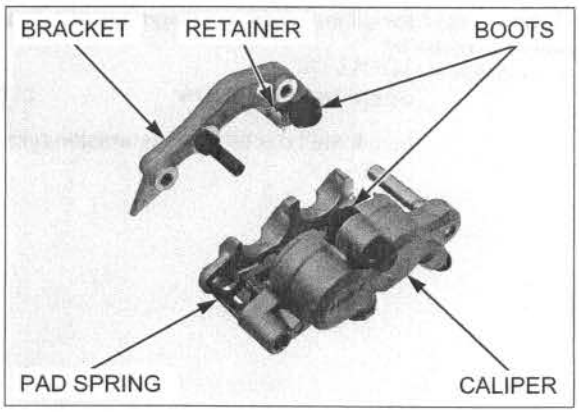

Place a shop towel under the caliper to cushion the piston when it is expelled.

Do not bring the air nozzle too close to the inlet or the pistons may be forced out with excessive force that could cause injury.

Apply short bursts of air pressure to the fluid inlet to remove the pistons.

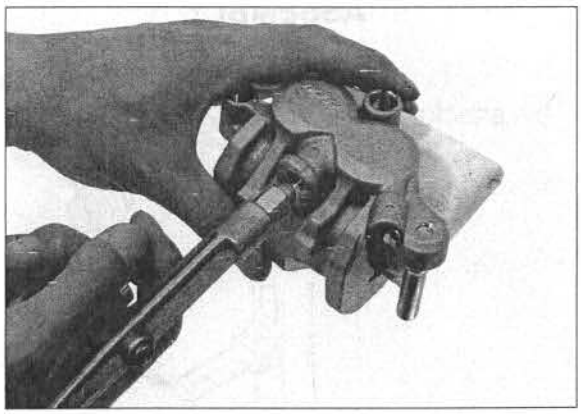

Be careful not to damage the piston sliding surface.

Push the dust seals and piston seals in, and lift them out.

Clean the seal grooves, caliper pistons and caliper piston sliding surfaces with clean brake fluid.

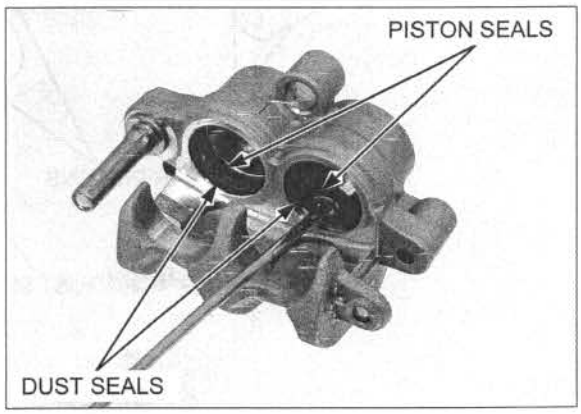

INSPECTION

Check the caliper cylinder for scoring, scratches or damage.

Measure the caliper cylinder I.D.

SERVICE LIMIT: 27.060 mm (1.0654 in)

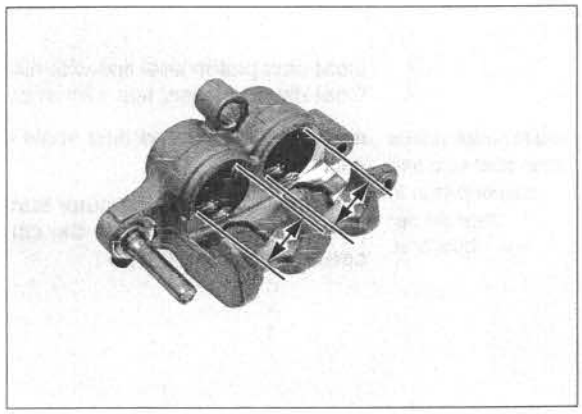

Check the caliper pistons for scoring, scratches or damage.

Measure the caliper piston O.D.

SERVICE LIMIT: 26.853 mm (1.0572 in)

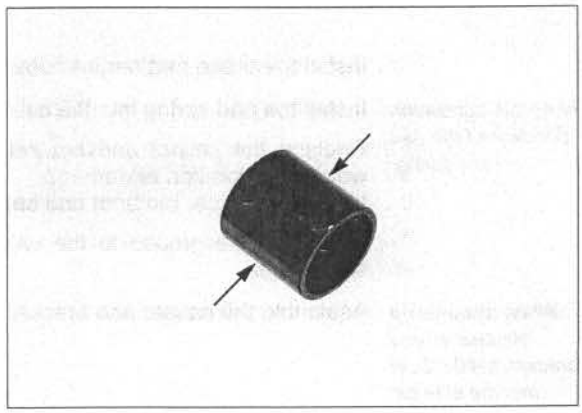

ASSEMBLY

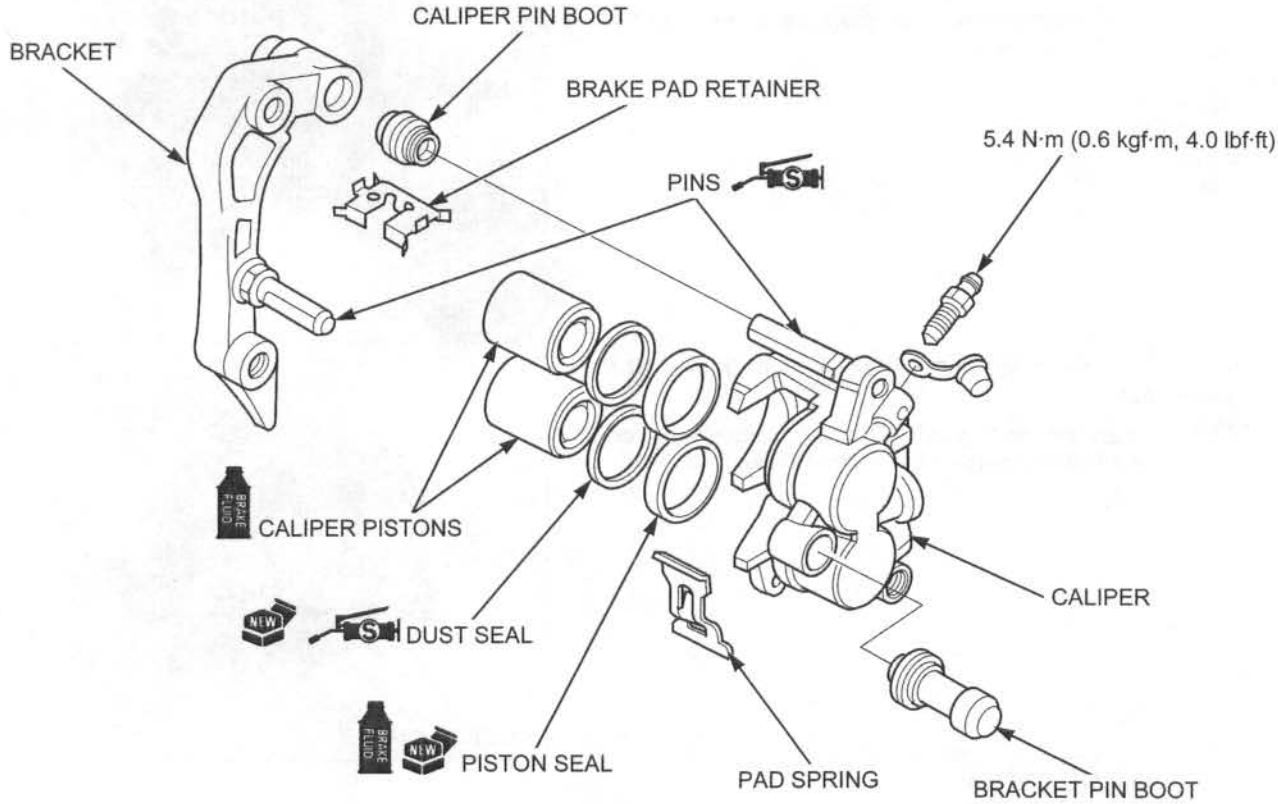

Coat new piston seal lips with clean brake fluid.
Coat new dust seal lips with silicon grease.

Install each piston seal, dust seal and caliper piston in their proper locations.

Install the piston and dust seals into the grooves in the caliper.

Coat the caliper piston outer surfaces with clean brake fluid and install them into the caliper cylinder with their open ends facing the pad.

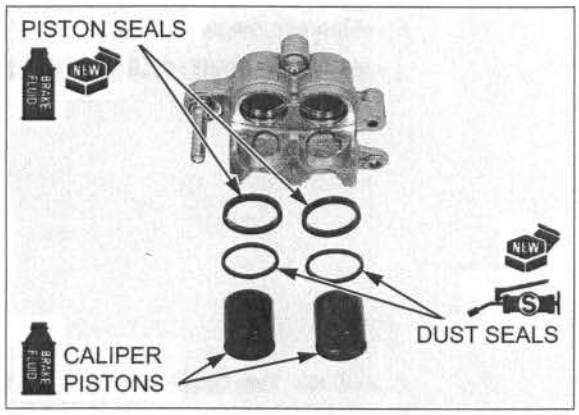

Install the brake pad retainer onto the caliper bracket.

Note the installation direction of the pad spring.

Install the pad spring into the caliper.

Replace the caliper and bracket pin boots if there is wear, deterioration or damage.
Install the caliper pin boot and bracket pin boot.

Apply silicone grease to the caliper and bracket pins sliding area.

When assembling the caliper and bracket, set the boot into the side pin groove.

Assemble the caliper and bracket.

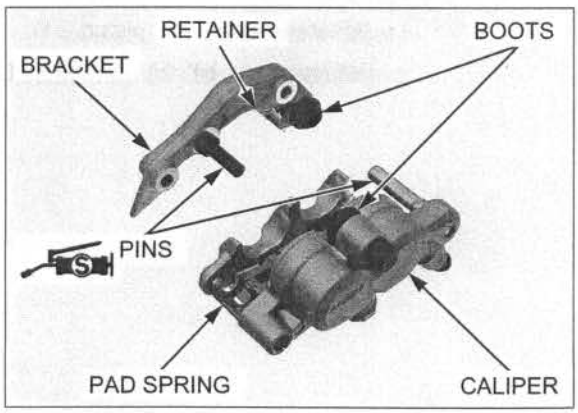

INSTALLATION

Install the brake pads (page 16-11).

Install the brake hose eyelet with the brake hose oil bolt and new sealing washers.
Push the brake hose eyelet joint against the stopper, then tighten the brake hose oil bolt to the specified torque.

TORQUE: 34 N·m (3.5 kgf·m, 25 lbf·ft)

Fill the reservoir to the upper level and bleed the hydraulic system (page 16-8).

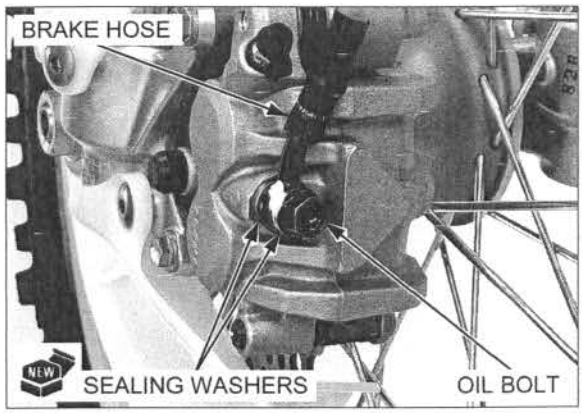

REAR BRAKE CALIPER

REMOVAL

Drain the rear brake hydraulic system (page 16-7).
Remove the brake pads (page 16-13).

Remove the bolts and rear brake caliper guard.

Loosen the brake hose oil bolt.

Remove the rear wheel (page 15-8).

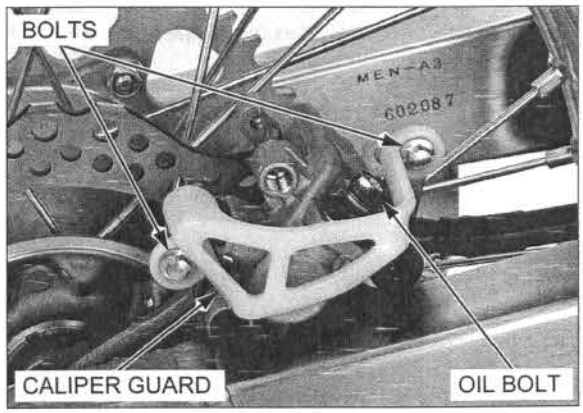

Remove the brake caliper/bracket assembly to the slide rail of the swingarm.

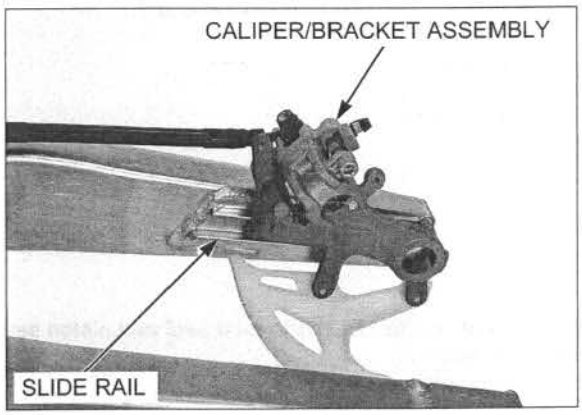

Remove the brake hose oil bolt, sealing washers and brake hose eyelet.

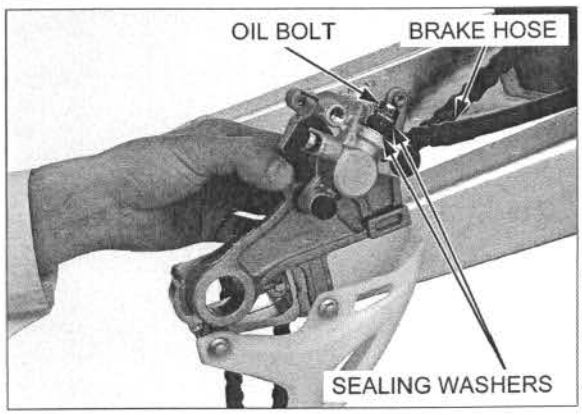

DISASSEMBLY

Remove the bolts and brake disc cover.

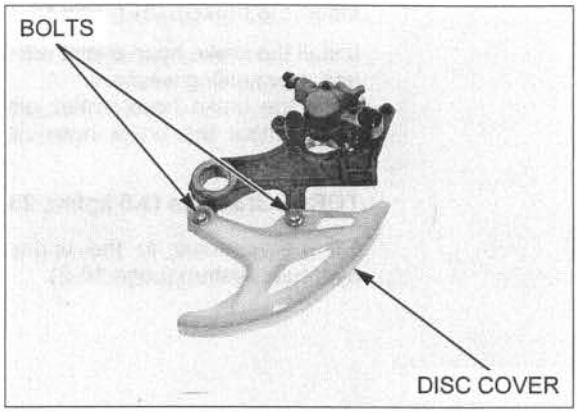

Remove the caliper bracket from the caliper.

Remove the brake pad spring from the caliper.
Remove the brake pad retainer from the caliper bracket.
Remove the caliper pin boot and bracket pin boot.

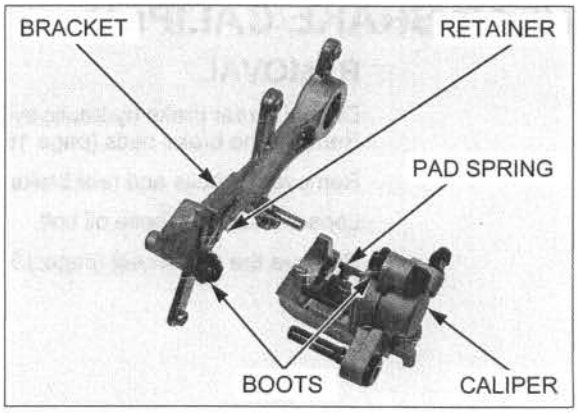

Place a shop towel under the caliper to cushion the piston when it is expelled.

Do not bring the air nozzle too close to the inlet or the piston may be forced out with excessive force that could cause injury.

Apply short bursts of air pressure to the fluid inlet to remove the pistons.

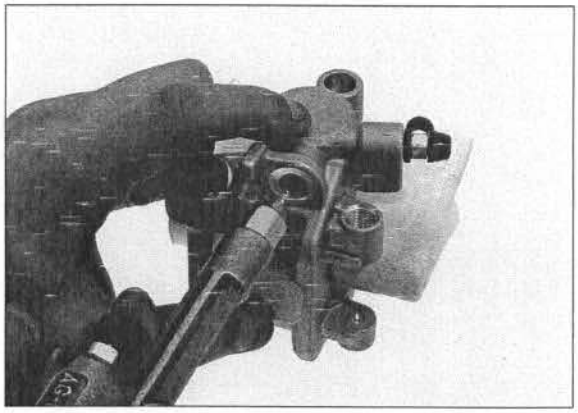

Be careful not to damage the piston sliding surface.

Push the dust seal and piston seal in and lift them out.

Clean the seal grooves, caliper piston and caliper piston sliding surface with clean brake fluid.

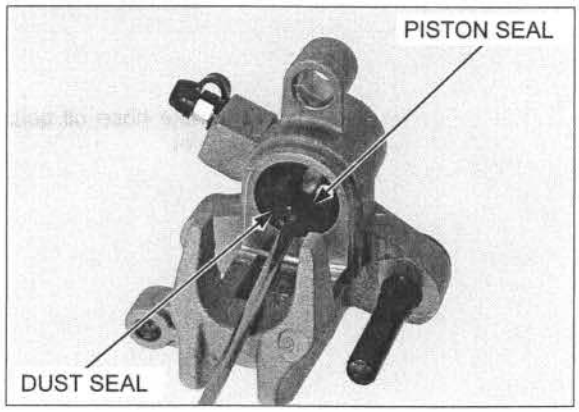

INSPECTION

Check the caliper cylinder for scoring, scratches or damage.

Measure the caliper cylinder I.D.

SERVICE LIMIT: 22.712 mm (0.8942 in)

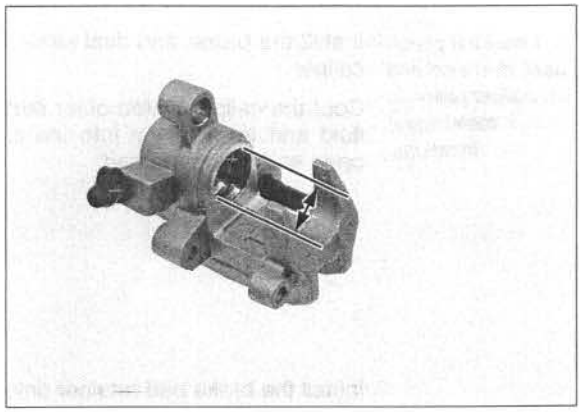

Check the caliper pistons for scoring, scratches or damage.

Measure the caliper piston O.D.

SERVICE LIMIT: 22.573 mm (0.8887 in)

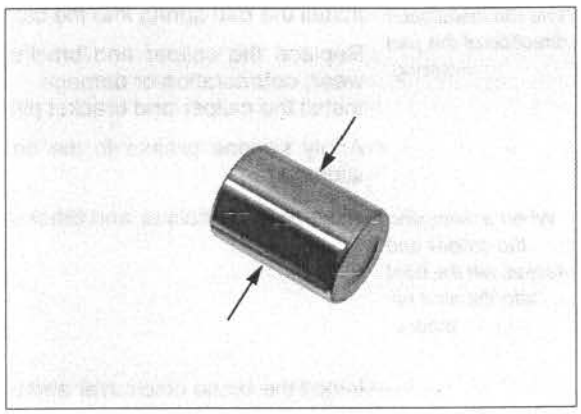

ASSEMBLY

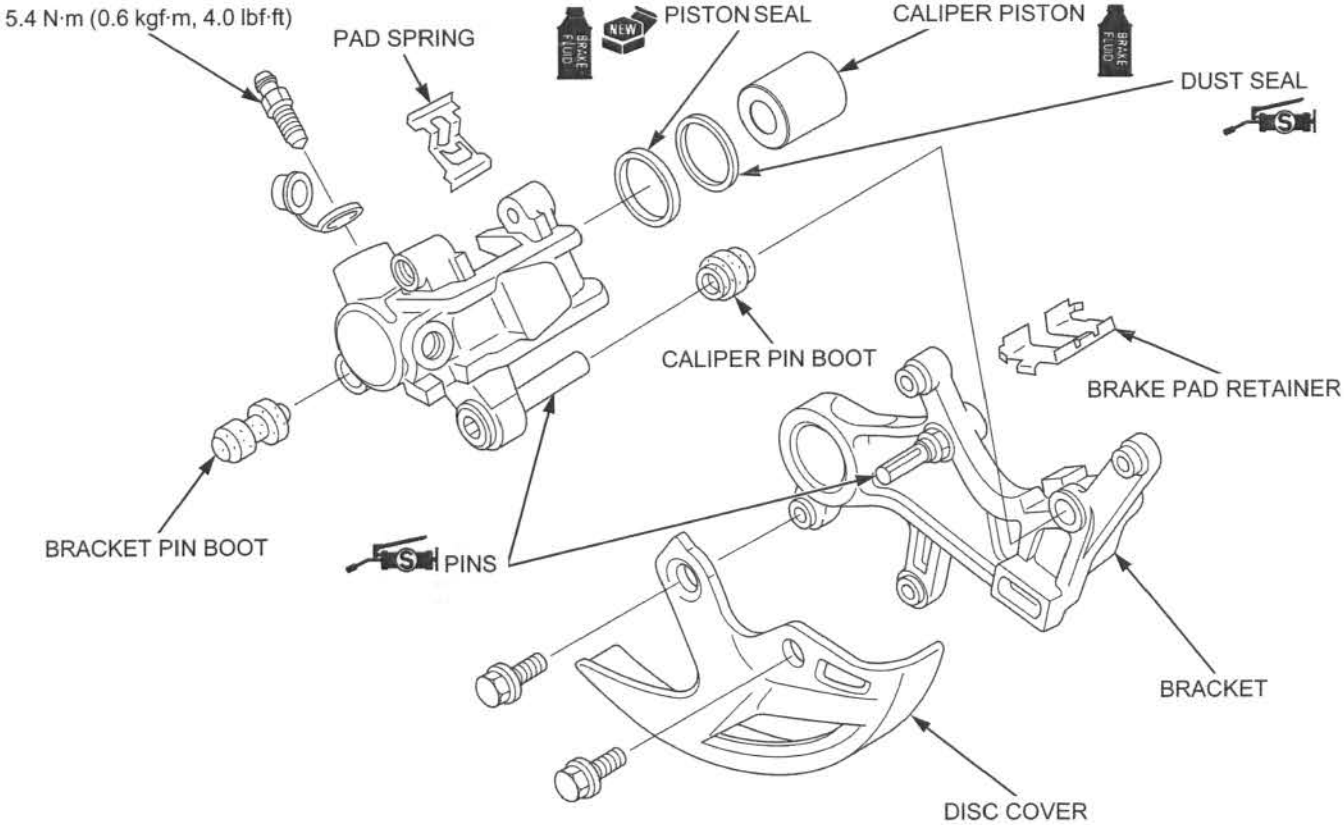

Coat a new piston seal lip with clean brake fluid.
Coat a new dust seal lip with silicone grease.

Install the piston seal, dust seal and caliper piston in their proper locations.

Install the piston and dust seals into the grooves in the caliper.

Coat the caliper piston outer surfaces with clean brake fluid and install them into the caliper cylinder with its open end facing the pad.

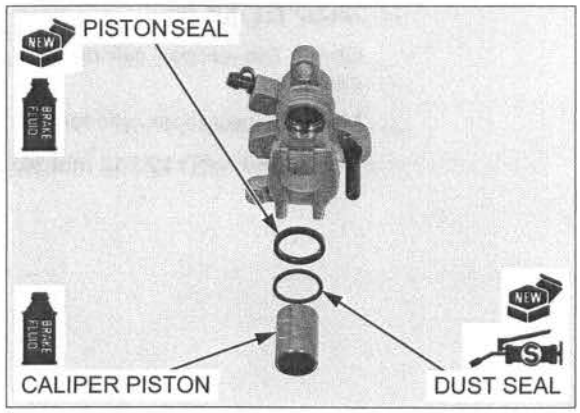

Install the brake pad retainer onto the caliper bracket.

Note the installation direction of the pad spring.

Install the pad spring into the caliper.

Replace the caliper and bracket pin boots if there is wear, deterioration or damage.
Install the caliper and bracket pin boots.

Apply silicone grease to the caliper and bracket pins sliding area.

When assembling the caliper and bracket, set the boot into the side pin groove.

Assemble the caliper and bracket.

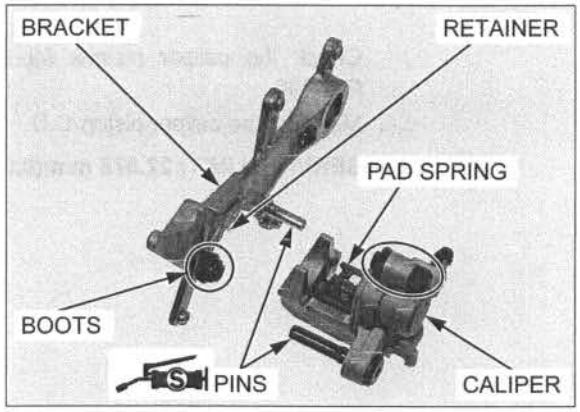

Install the brake disc cover and bolts.
Tighten the bolts securely.

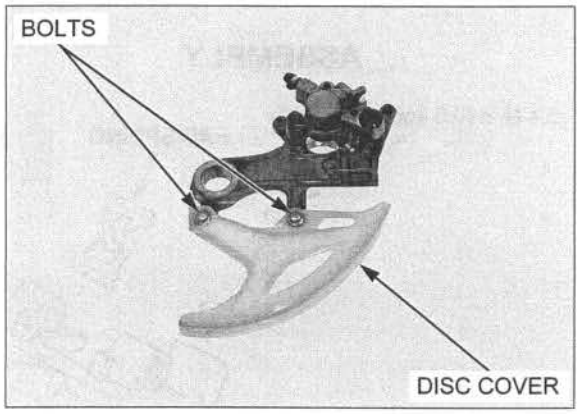

INSTALLATION

Temporarily install the brake hose eyelet with the brake hose oil bolt and new sealing washers.

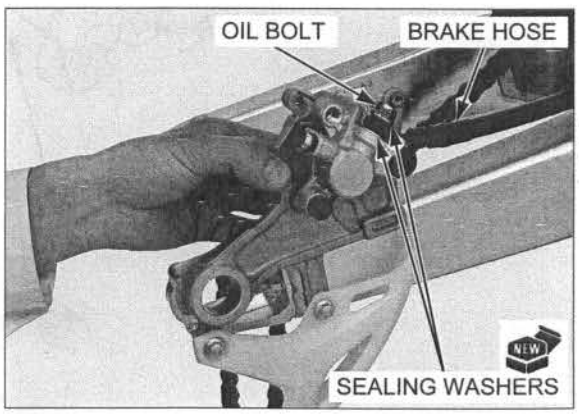

Install the brake caliper/bracket assembly to the swingarm by aligning the bracket tab with the slide rail of the swingarm.

Install the rear wheel (page 15-13).

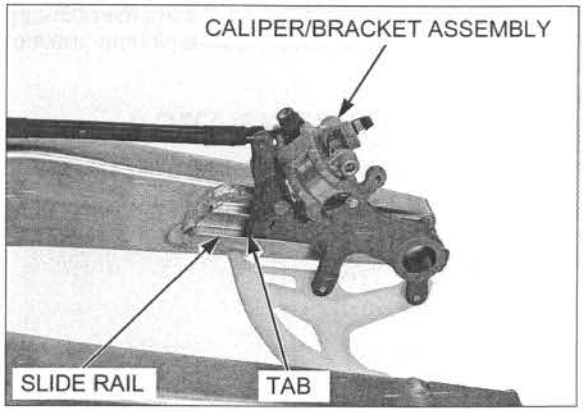

Push the brake hose eyelet joint against the stopper, then tighten the brake hose oil bolt to the specified torque.

TORQUE: 34 N·m (3.5 kgf·m, 25 lbf·ft)

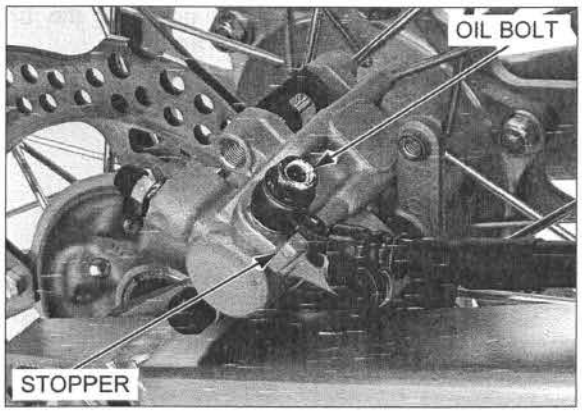

Install the rear brake caliper guard and bolts.
Tighten the bolts.

Install the brake pads (page 16-13).
Fill the reservoir to the upper level and bleed the hydraulic system (page 16-8).

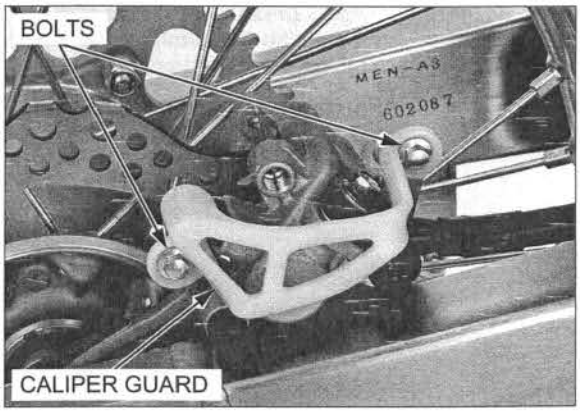

BRAKE PEDAL

REMOVAL

Remove the brake pedal pivot bolt, washer and dust seals.
Remove the return spring.

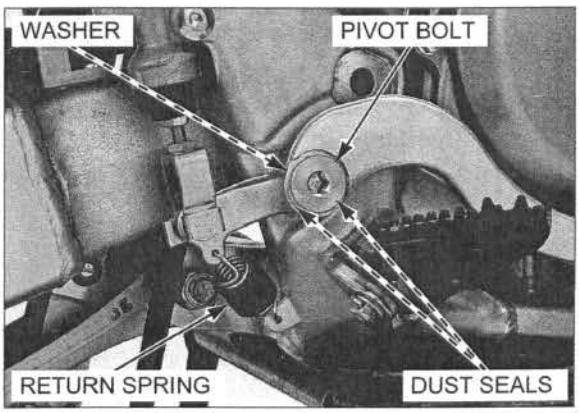

Remove and discard the cotter pin.
Remove the joint pin and brake pedal.

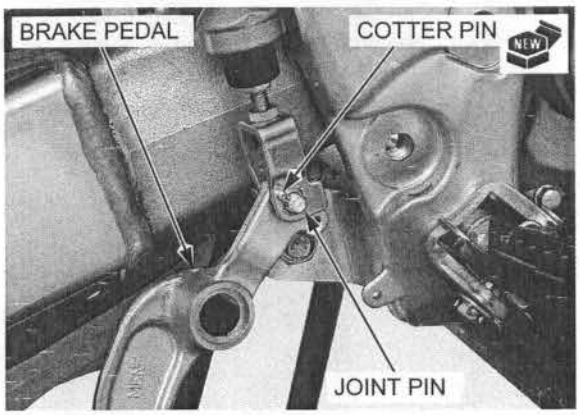

INSTALLATION

Connect the brake pedal to the push rod.

Install the joint pin and new cotter pin.

Apply locking agent to the brake pedal pivot bolt threads as shown.

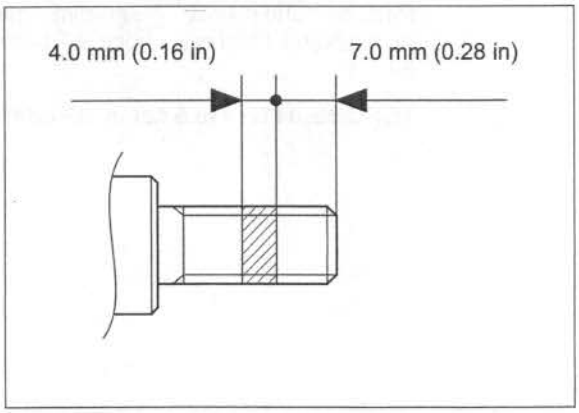

Apply grease to the dust seal lips.
Install the dust seals to the brake pedal with its lip side facing out as shown.

Install the return spring.

Set the washer to the frame.

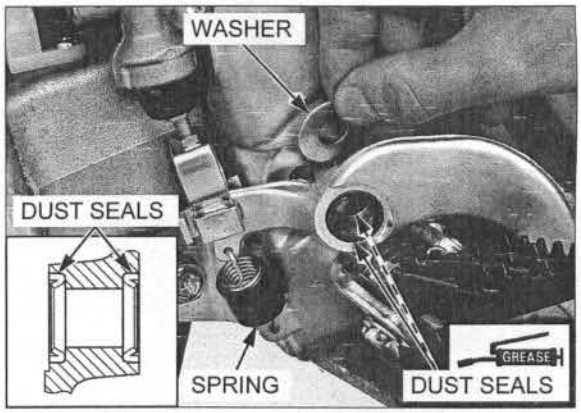

Apply grease to the brake pedal pivot bolt sliding surface.

Install the brake pedal.
Install and tighten the brake pedal pivot bolt to the specified torque.

TORQUE: 36 N·m (3.7 kgf·m, 27 lbf·ft)

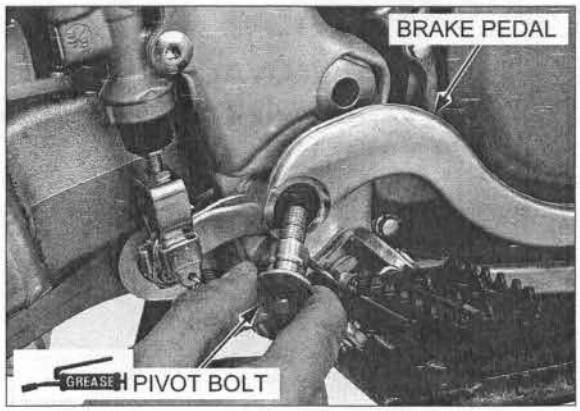

17. ELECTRICAL SYSTEM

SYSTEM LOCATION

'09 shown:

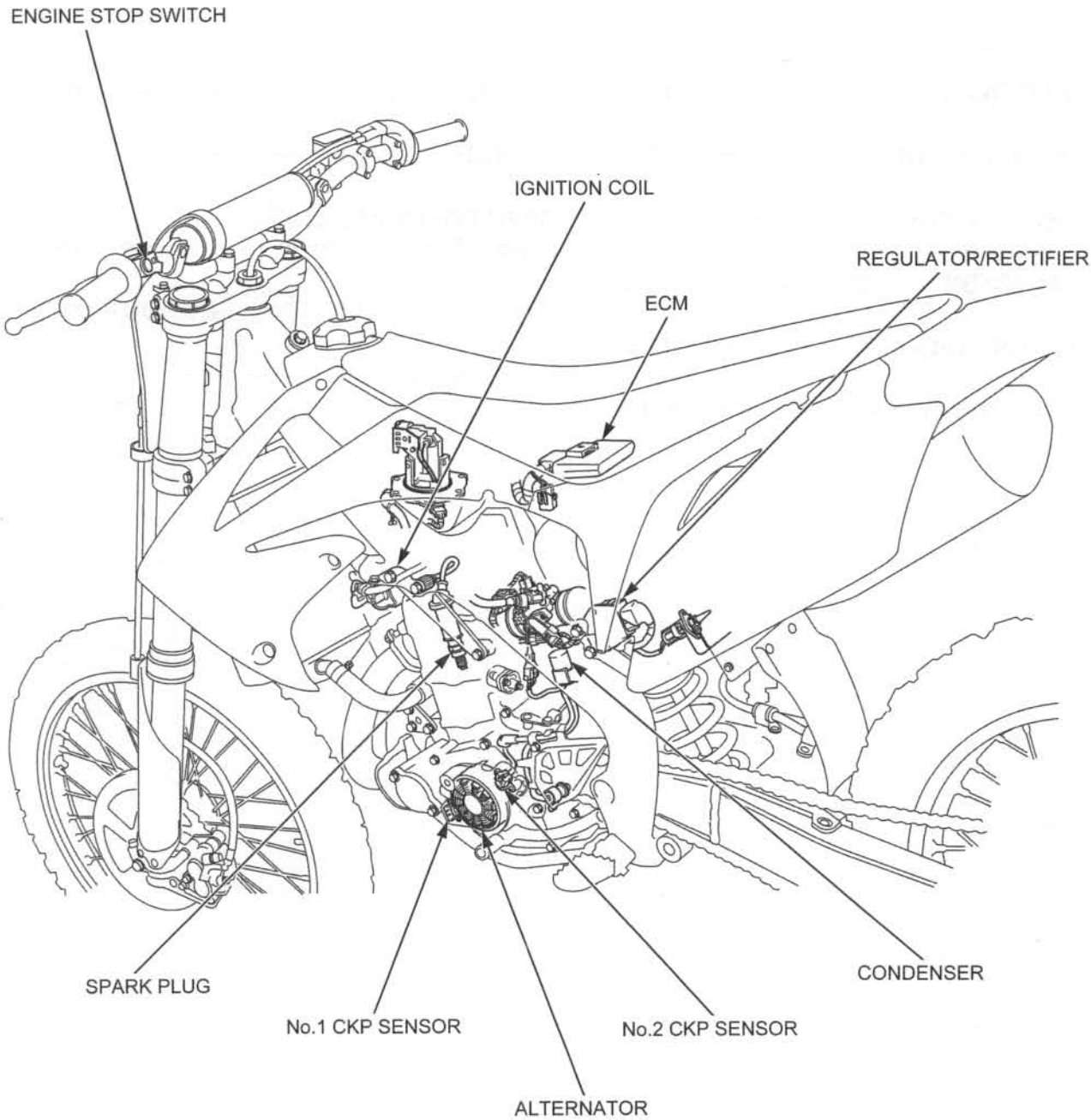

SERVICE INFORMATION

GENERAL

NOTICE

- *Always stop the engine before disconnecting any electrical component.*
- *Some electrical components may be damaged if terminals or connectors are connected or disconnected while the engine is running and current is present.*
- *The ECM may be damaged if dropped. Also if the connector is disconnected when current is flowing, the excessive voltage may damage the module. Always stop the engine before servicing.*
- *Use a spark plug of the correct heat range. Using a spark plug with an incorrect heat range can damage the engine.*

- When servicing the ignition system, always follow the steps in the troubleshooting sequence (page 17-5).
- The ignition timing does not normally need to be adjusted since the ECM is factory preset.
- A faulty ignition system is often related to poor connections. Check connections before proceeding.
- This motorcycle's ICM is built into the ECM.
- For PGM-FI troubleshooting information (page 6-6).

SPECIFICATIONS

ITEM			SPECIFICATION
Spark plug	Standard	(NGK)	SILMAR9A-9S
	Optional	(NGK)	SILMAR10A-9S
Spark plug gap			0.8 – 0.9 mm (0.03 – 0.04 in)
Ignition coil resistance (at 20°C/68°F)			2.6 – 3.2 Ω
Ignition coil peak voltage			100 V minimum
CKP sensor peak voltage			0.7 V minimum
Alternator coil resistance (at 20°C/68°F)			0.1 – 1.0 Ω
Ignition timing ("F" mark)			8° BTDC at idle
Alternator		Capacity	0.091 kw/5,000 rpm

TORQUE VALUE

Timing hole cap	6.0 N·m (0.6 kgf·m, 4.4 lbf·ft)	Apply grease to the threads.

TOOLS

Peak voltage adaptor 07HGJ-0020100 (Not available in U.S.A.) 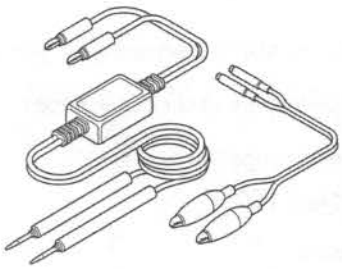 with commercially available digital multimeter (impedance 10 MΩ/DCV minimum)	IgnitionMate peak voltage tester MTP07-0286 (U.S.A. only) 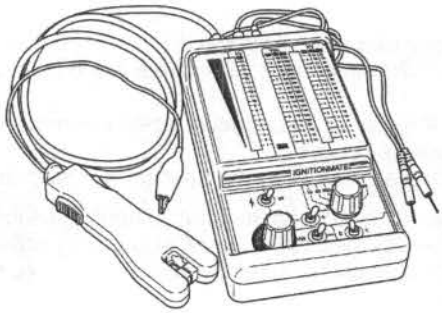	Test probe 07ZAJ-RDJA110 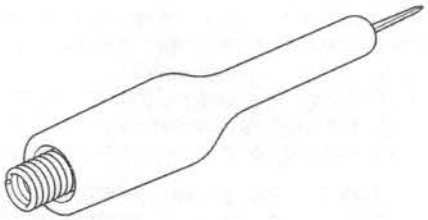

TROUBLESHOOTING

- Inspect the following before diagnosing the system.
  - Faulty spark plug
  - Loose spark plug cap or spark plug wire connection
  - Water got into the spark plug cap (affecting the ignition coil secondary voltage)
- If there is no spark at cylinder, temporarily exchange the ignition coil with a known good one, and perform the spark test. If there is spark, the original ignition coil is faulty.
- "Initial voltage" of the ignition primary coil is the battery voltage with the 12 V battery connected and turn the "ECM" selector switch is ON. (The engine in not cranked by the kickstarter.)

No spark at plug

Unusual Condition		Probable Cause (Check in numerical order)
Ignition coil primary voltage	No initial voltage with the 12 V battery connected and turn the "ECM" selector switch is ON (Other electrical components are normal).	1. An open circuit in Black wire between the ignition coil and fuel pump sub harness or regulator/rectifier. 2. Loose or poor connection of the primary terminal, or an open circuit in the primary coil. 3. Faulty condenser.
	Initial voltage is normal, but it drops by 2 – 4 V while cranking the engine.	1. Incorrect peak voltage adaptor connections (System is normal if measured voltage is over the specifications with reverse connections). 2. Faulty CKP sensor (Measure peak voltage). 3. Faulty alternator (Measure the alternator coil resistance). 4. Faulty regulator/rectifier (Check the wire harness and regulator/rectifier). 5. Faulty ECM (in case when above No. 1 through 4 are normal).
	Initial voltage is normal but there is no peak voltage while cranking the engine.	1. Incorrect peak voltage adaptor connections (System is normal if measured voltage is over the specifications with reverse connections). 2. Faulty peak voltage adaptor. 3. Faulty engine stop switch (Check the engine stop switch operation). 4. An open circuit or loose connection in Green wire at the ECM. 5. An open circuit or loose connection in Yellow/blue wire between the ignition coil and ECM. 6. Faulty CKP sensor (Measure peak voltage). 7. Faulty alternator (Measure the alternator coil resistance). 8. Faulty regulator/rectifier (Check the wire harness and regulator/rectifier). 9. Faulty ECM (in case when above No. 1 through 8 are normal).
	Initial voltage is normal but peak voltage is lower than the standard value.	1. The multimeter impedance is too low; below 10 MΩ/DCV. 2. Cranking speed is too slow (Kickstarter is weak). 3. The sampling timing of the tester and measured pulse were not synchronized (System is normal if measured voltage is over the standard voltage at least once). 4. Faulty engine stop switch (Check the engine stop switch operation). 5. Faulty alternator (Measure the alternator coil resistance). 6. Faulty regulator/rectifier (Check the wire harness and regulator/rectifier). 7. Faulty ECM (in case when above No. 1 through 6 are normal).
	Initial and peak voltages are normal but no spark jumps.	1. Faulty spark plug or leaking ignition coil secondary current ampere. 2. Faulty ignition coil (Measure the resistance at the ignition coil terminals).
CKP sensor	Low peak voltage.	1. The multimeter impedance is too low; below 10 MΩ/DCV. 2. Cranking speed is too slow (Kickstarter is weak). 3. The sampling timing of the tester and measured pulse were not synchronized. (System is normal if measured voltage is over the standard voltage at least once.) 4. Faulty CKP sensor (in case when above No. 1 through 3 are normal).
	No peak voltage.	1. Faulty peak voltage adaptor. 2. Faulty CKP sensor.

IGNITION SYSTEM INSPECTION

- If there is no spark at the plug, check all connections for loose or poor contact before measuring each peak voltage.
- Use the recommended digital multimeter or a commercially available digital multimeter with an impedance of 10 MΩ/DCV minimum.
- The display value differs depending upon the internal impedance of the multimeter.

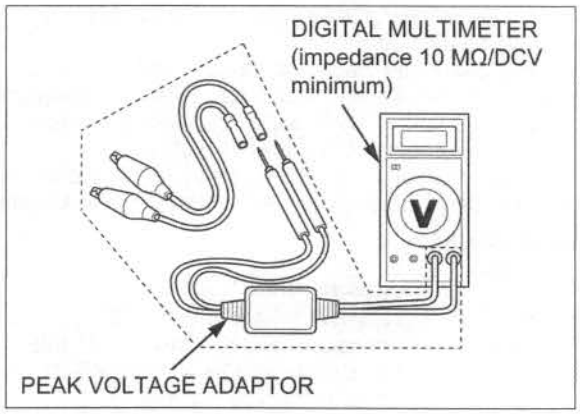

Avoid touching the spark plug and tester probes to prevent electric shock.

Connect the peak voltage tester (IgnitionMate, U.S.A. only) or peak voltage adapter to the digital multimeter.

TOOLS:

IgnitionMate peak voltage tester	**MTP07-0286 (U.S.A. only) or**
Peak voltage adaptor	**07HGJ-0020100 (not available in U.S.A.)**

with commercially available digital multimeter (impedance 10 MΩ/DCV minimum)

IGNITION COIL PRIMARY PEAK VOLTAGE

Check all system connections before inspection.
If the system is disconnected, incorrect peak voltage might be measured.

Check cylinder compression and check that the spark plug is installed correctly.

'09: Hang the fuel tank to the left side of the frame (page 4-6).

Disconnect the fuel pump sub harness 2P (Natural) connector.

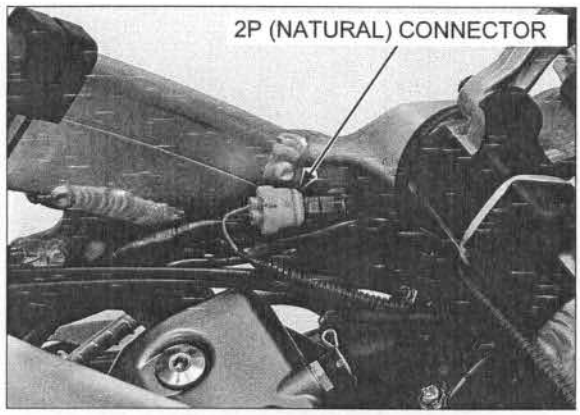

After '09: Remove the right radiator shrouds (page 3-4).

Disconnect the DLC/fuel pump sub harness 4P (Red) connector.

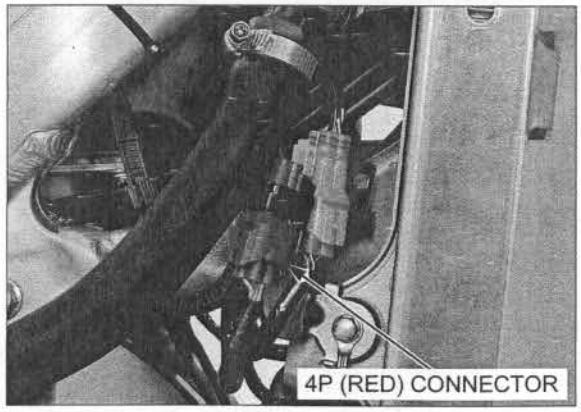

Shift the transmission into neutral.
Connect a known-good spark plug to the spark plug cap and ground the spark plug to the cylinder as done in a spark test.

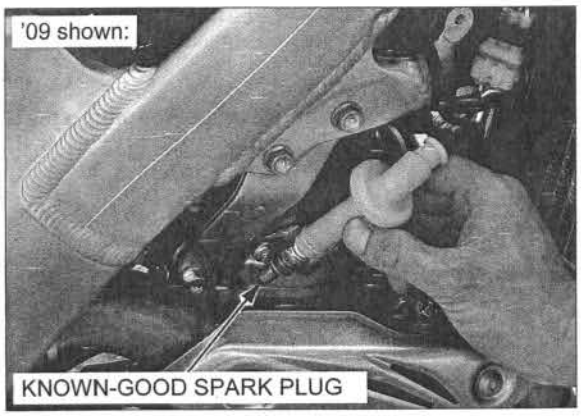

With the ignition coil primary wire connected, connect the peak voltage adaptor to the ignition coil.

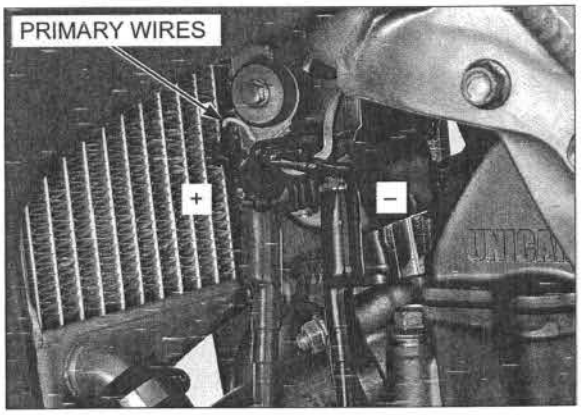

TOOLS:

IgnitionMate peak voltage tester	**MTP07-0286 (U.S.A. only) or**
Peak voltage adaptor	**07HGJ-0020100 (not available in U.S.A.)**

with commercially available digital multimeter (impedance 10 MΩ/DCV minimum)

Connection: Yellow/blue (+) – Black (–)

Connect the 12 V battery (turn the "ECM" selector switch is ON).

- '09: page 6-14
- 'After '09: page 6-14

Check the initial voltage at this time.
The battery voltage should be measured.

If the initial voltage cannot be measured, follow the checks in the troubleshooting table (page 17-5).

Remove the 12 V battery (page 6-14).

Shift the transmission into neutral.

Avoid touching the spark plug or tester probes to prevent electric shock.

Crank the engine with the kickstarter and read the ignition coil primary peak voltage.

STANDARD: 100 V minimum

If the peak voltage is lower than the standard value, follow the checks described in the troubleshooting chart (page 17-5).

CKP SENSOR PEAK VOLTAGE

NOTE:
Check that the cylinder compression is normal and the spark plug is installed correctly in the cylinder head.

Hang the fuel tank to the left side of the frame (page 4-6).

Seal the ECM connector with tape to prevent dirt and oil from entering the connector after disconnecting it.

Disconnect the ECM 33P (Black) connector.

NOTE:
When reconnecting the ECM connector, check that there is no dirt and oil in the connector.

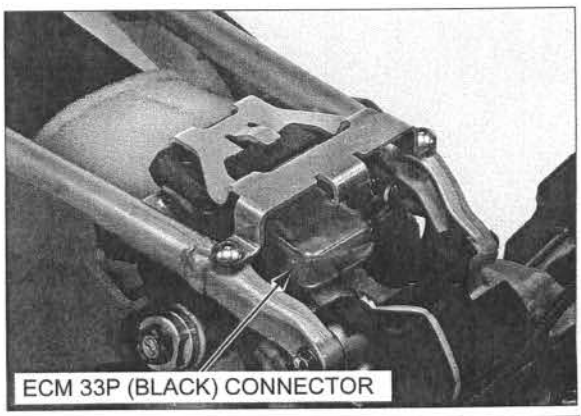

Connect the peak voltage tester or adaptor probes to the wire harness side connector terminals.

TOOLS:

IgnitionMate peak voltage tester	**MTP07-0286 (U.S.A. only) or**
Peak voltage adaptor	**07HGJ-0020100 (not available in U.S.A.)**

with commercially available digital multimeter (impedance 10 MΩ/DCV minimum)

Test probe	**07ZAJ-RDJA110**

Connection:

No.1 CKP sensor:

Blue/yellow (11) (+) – Green/white (10) (–)

No.2 CKP sensor:

White/yellow (7) (+) – Green/white (10) (–)

Shift the transmission into neutral.
Crank the engine with the kickstarter and measure the CKP sensor peak voltage.

PEAK VOLTAGE:0.7 V minimum

If the voltage measured at the ECM connector is abnormal, measure the peak voltage at the alternator/CKP sensor connector.

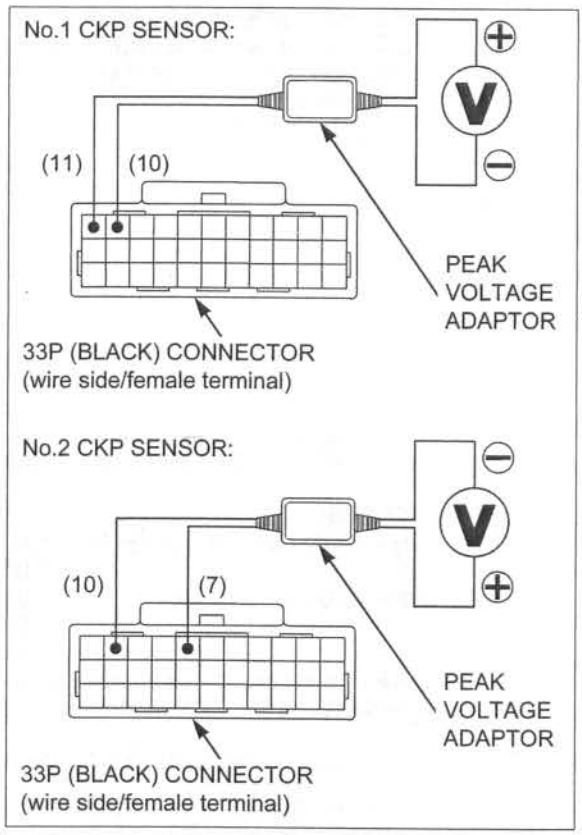

Disconnect the alternator/CKP sensor 6P connector.

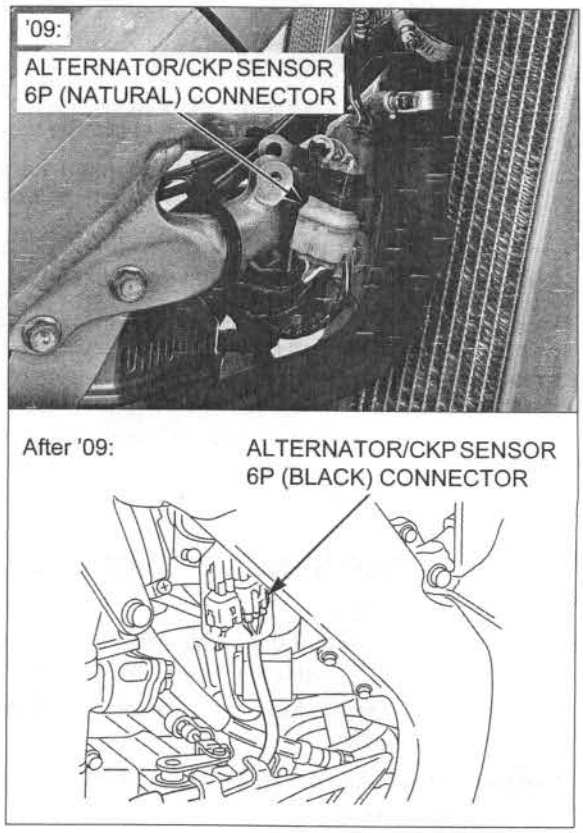

Connect the peak voltage tester or adaptor probes to the CKP sensor side connector terminals.

Connection:
No.1 CKP sensor:
Blue/yellow (+) – Green/white (–)
No.2 CKP sensor:
White/yellow (+) – Green (–)

In the same manner as at the ECM connector, measure the peak voltage and compare it to the voltage measured at the ECM connector.

- If the peak voltage measured at the ECM connector is abnormal and the one measured at the alternator/CKP sensor connector is normal, the Blue/yellow or White/yellow or Green/white wire has an open or short circuit, or loose connection.
- If both peak voltages are abnormal, follow the checks described in the troubleshooting chart (page 17-5).

If the CKP sensor is faulty, replace the alternator stator/CKP sensor assembly (page 12-7).

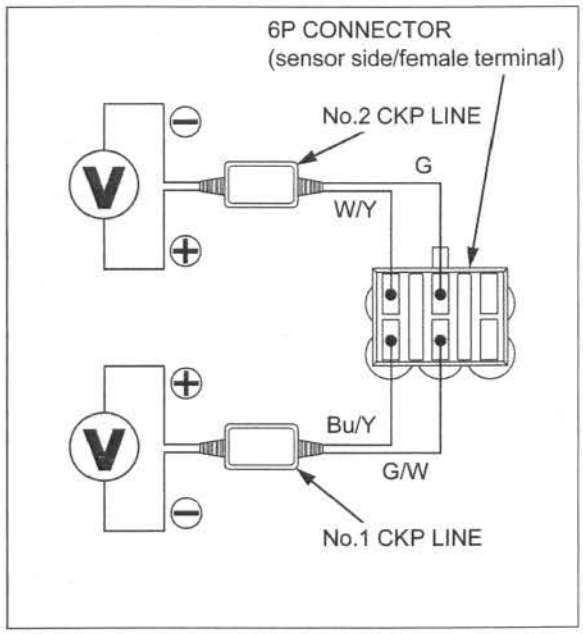

ALTERNATOR COIL

INSPECTION

'09: Remove the right radiator shroud (page 3-4).

Disconnect the alternator/CKP sensor 6P connector. Check the connector for loose contacts or corroded terminals.

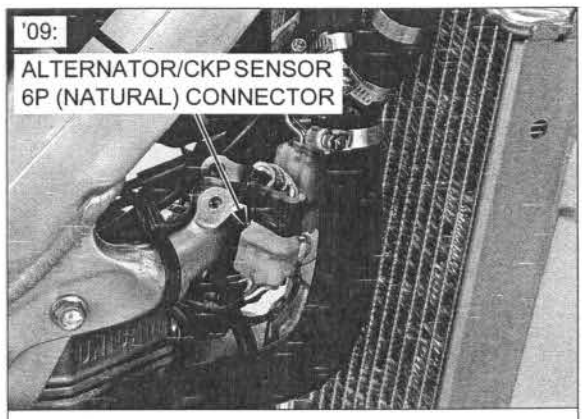

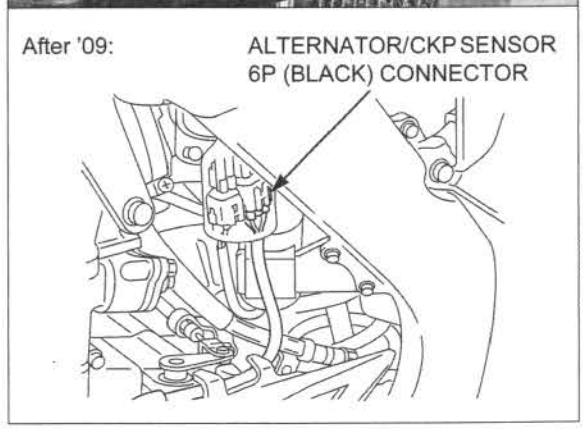

Measure the resistance at the alternator side connector terminals.

Connection: Yellow – White

STANDARD: 0.1 – 1.0 Ω (at 20°C/68°F)

Check for continuity between each wire terminal of the alternator side connector and ground.

Connection: Yellow – Ground
White – Ground

There should be no continuity.

Replace the alternator stator if resistance is out of specification, or if any wire has continuity to ground.

Alternator stator replacement (page 12-7).

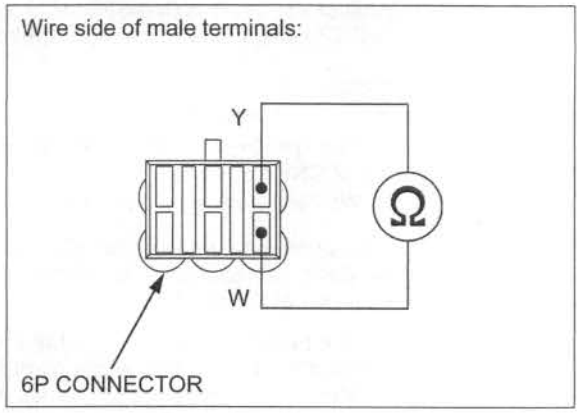

REGULATOR/RECTIFIER

REMOVAL/INSTALLATION

Remove the condenser (page 17-18).

Disconnect the regulator/rectifier 5P (Black) connector.

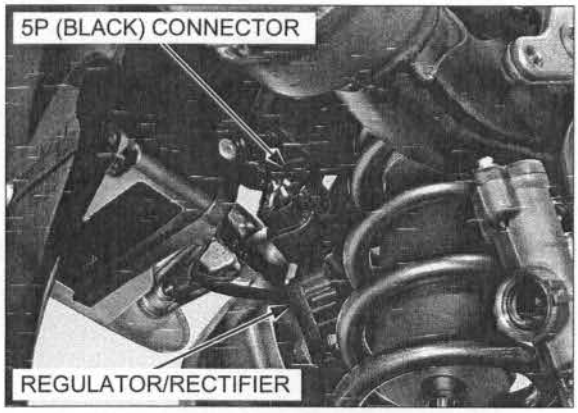

Remove the bolts, nut and regulator/rectifier.

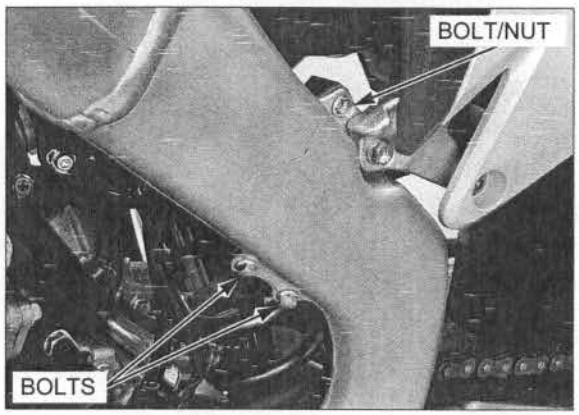

Release the wire harness from the clamp.

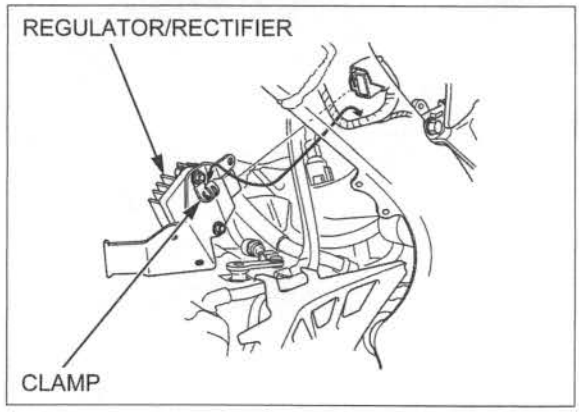

Remove the following:

- Bolts
- Nuts
- Clamp
- Stay

Route the wires properly (page 1-19).

Installation is in the reverse order of removal.

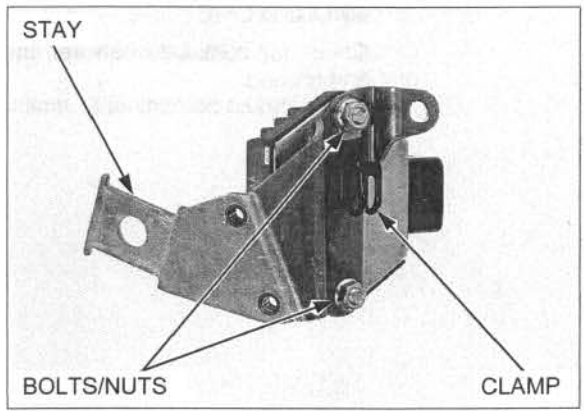

INSPECTION

Disconnect the regulator/rectifier 5P (Black) connector. Check the connectors for loose contacts or corroded terminals.

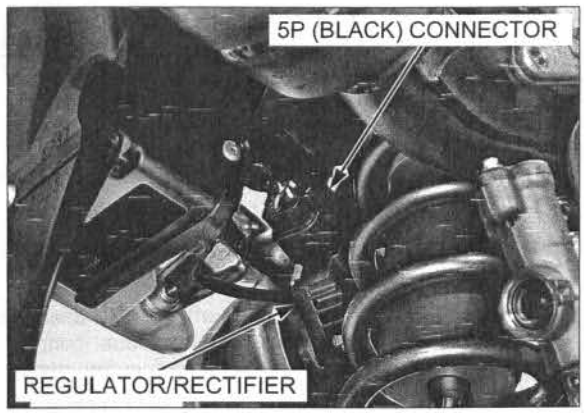

POWER OUTPUT LINE

Hang the fuel tank to the left side of the frame (page 4-6).

Disconnect the ECM 33P (Black) connector.

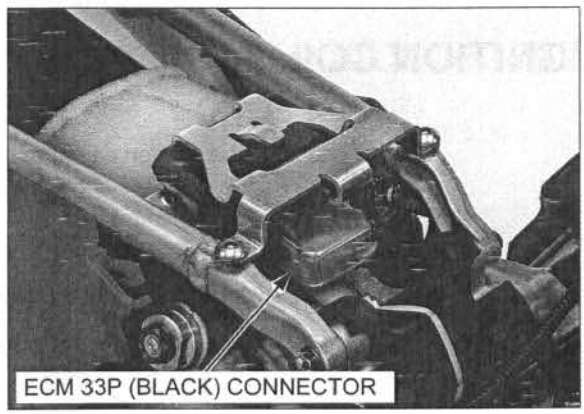

Check for continuity at the Black wire between the regulator/rectifier 5P (Black) connector and ECM 33P (Black) connector.

TOOLS:
Test probe **07ZAJ-RDJA110**

There should be continuity at all times.

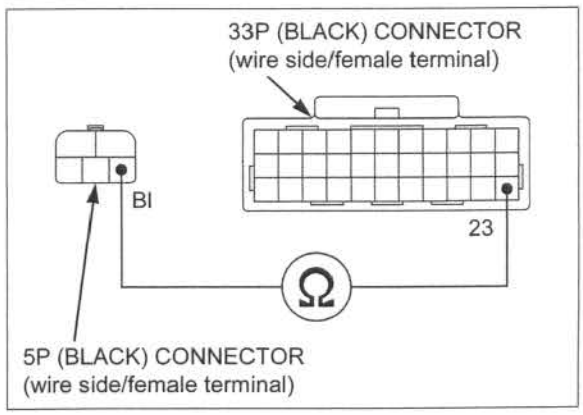

GROUND LINE

Check for continuity between the Green wire terminal and ground.
There should be continuity at all times.

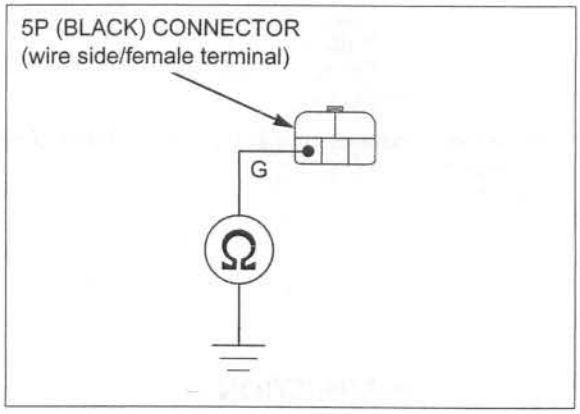

ALTERNATOR COIL LINE

Measure the resistance at the alternator side connector terminals.

Connection: Yellow – White

STANDARD: 0.1 – 1.0 Ω (at 20°C/68°F)

If resistance is out of specification, measure the resistance at the alternator/CKP sensor connector (page 17-9).

If all components of the charging system are normal and there are no loose connection at the regulator/ rectifier 5P (Black) connector, replace the regulator/ rectifier.

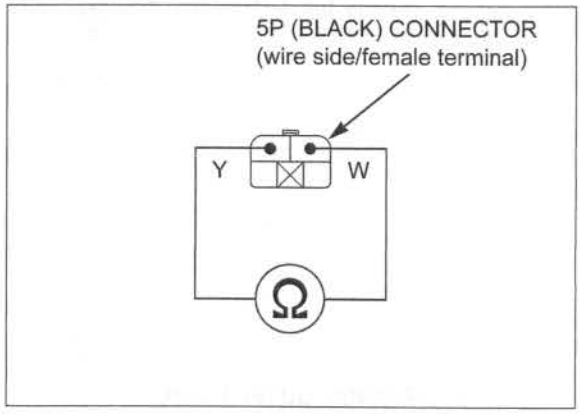

IGNITION COIL

INSPECTION

Disconnect the ignition coil wires.
Measure the ignition coil resistance between the ignition coil terminals.

STANDARD: 2.6 – 3.2 Ω (20°C/68°F)

If resistance is out of specification, replace the ignition coil.

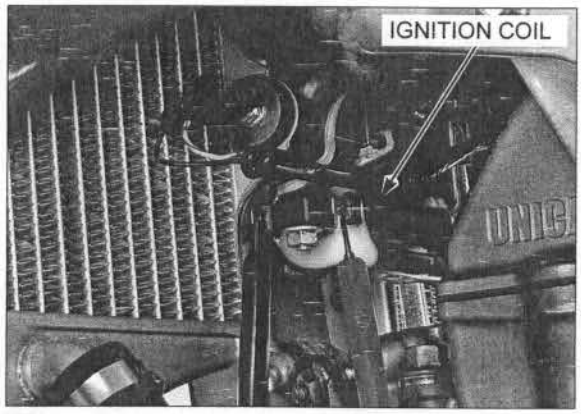

REMOVAL/INSTALLATION

Remove the spark plug cap (page 4-10).

Disconnect the ignition coil primary wire connectors and release them from the clamp.
Remove the bolt and washer.

Remove the bolt, ground wire and ignition coil with the stay.

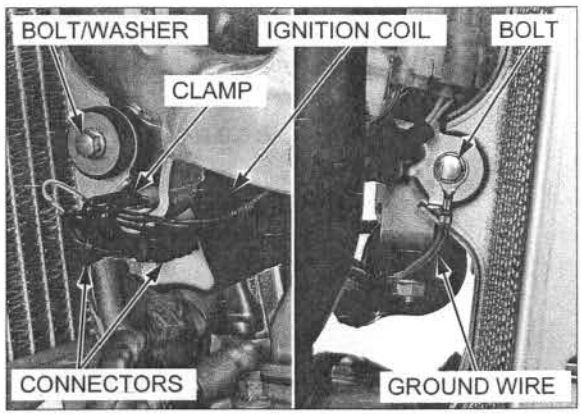

Remove the following:

- Bolts
- Nuts
- Clamp
- Stay

Route the wires properly (page 1-19).

Installation is in the reverse order of removal.

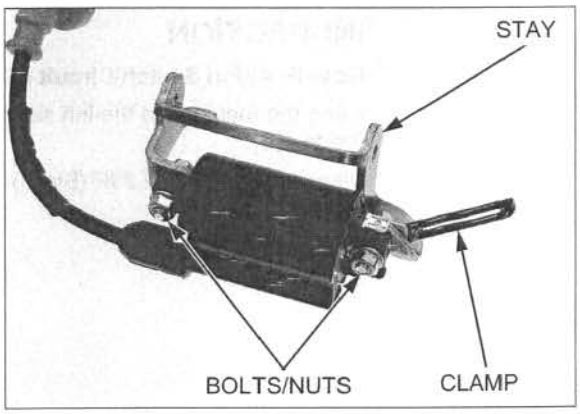

IGNITION TIMING

NOTE:

- The ignition timing is factory preset and only needs to be checked when an electrical system component is replaced.
- Use a tachometer with graduations of 50 rpm or smaller that will accurately indicate 50 rpm change.

Warm up the engine to normal operating temperature.
Stop the engine and remove the timing hole cap.

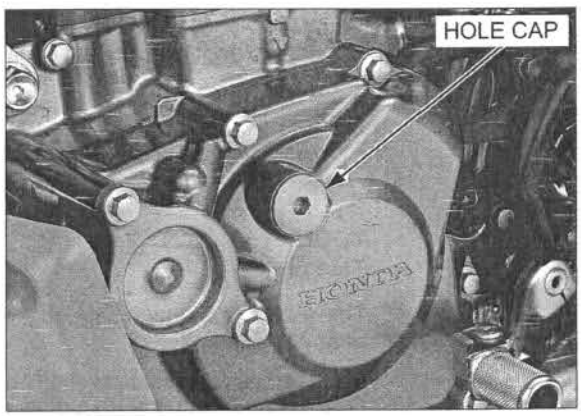

Attach a tachometer according to its manufacture's instructions.

Connect the timing light to the spark plug wire.
Read the instruction for timing light operation.

Start the engine and let it idle.

IDLE SPEED:

'09:	**1,750 ± 100 rpm**
After '09:	**1,800 ± 100 rpm**

Pointing the timing light towards the index mark.

The ignition timing is correct if the "F" mark on the flywheel aligns with the index notch in the left crankcase cover.

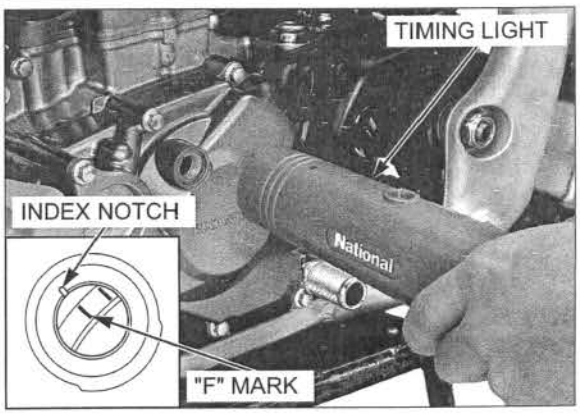

Apply engine oil to a new O-ring, and install it to the timing hole cap.
Apply grease to the timing hole cap threads.

Install the timing hole cap and tighten it to the specified torque.

TORQUE: 6.0 N·m (0.6 kgf·m, 4.4 lbf·ft)

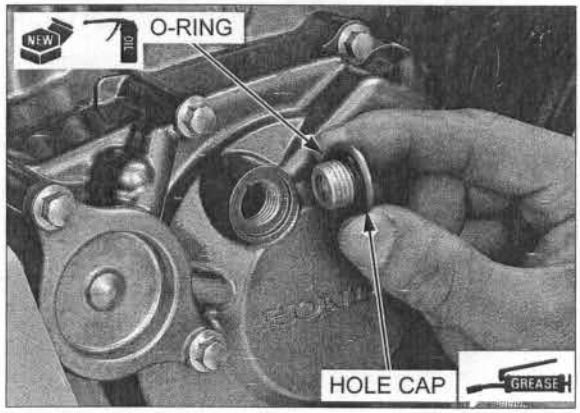

GEAR POSITION SWITCH ('09 model)

INSPECTION

Gear Position Switch Circuit Inspection

Hang the fuel tank to the left side of the frame (page 4-6).

Disconnect the ECM 33P (Black) connector.

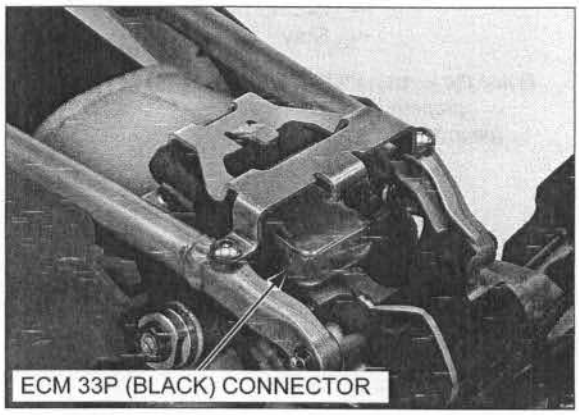

Check for continuity between the ECM 33P (Black) connector and ground at each corresponding gear position.

Connection:
"1st" and "N" position: 30 – Ground
"2nd" position: 31 – Ground

TOOL:
Test probe 07ZAJ-RDJA110

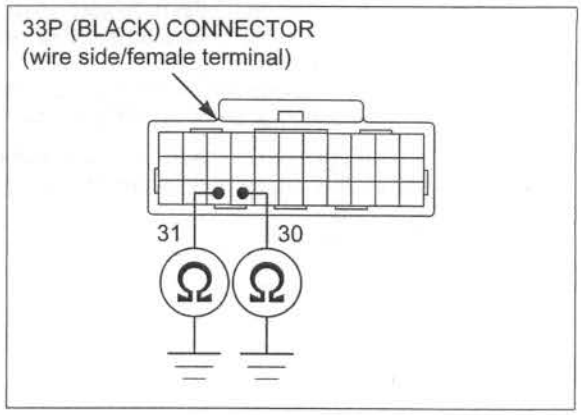

There should be continuity only at each corresponding gear position.

If the continuity is abnormal, open or short circuit in Light green/red (1st and N) or Gray (2nd) wire.

If the continuity is normal, check the "Gear Position Switch Inspection" (page 17-15).

Gear Position Switch Inspection

Remove the right radiator shroud (page 3-4).

Disconnect the gear position switch 2P (Green) connector.

Check for continuity between the terminals at each gear position.

There should be continuity only at the terminals that correspond to the gear positions shown below, and there should be no continuity at the other terminals.

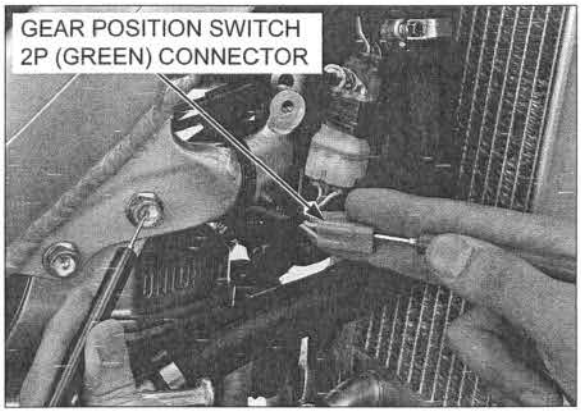

GEAR	GROUND	Gr	Lg/R
1	○		○
N	○		○
2	○	○	

Gr: Gray
Lg/R: Light green/red

If the continuity is abnormal, replace the gear position switch.

REMOVAL

Hang the fuel tank to the left side of the frame (page 4-6).

Remove the drive sprocket cover (page 4-20).

Remove the wire band, gear position switch 2P (Green) connector.

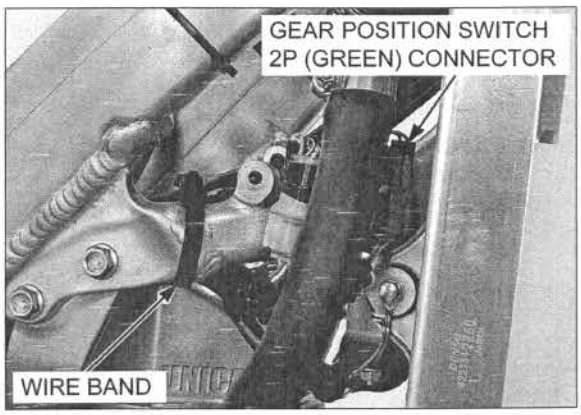

Remove the wire band and release the wire harness.

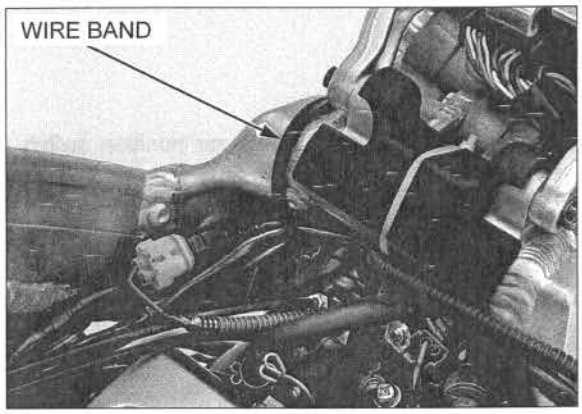

Remove the bolt, O-ring and gear position switch.

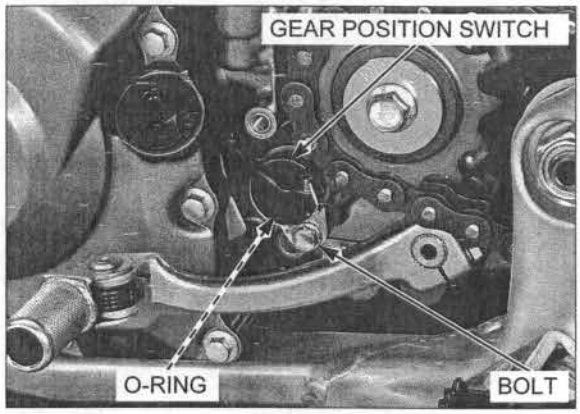

INSTALLATION

Apply oil to a new O-ring and install it to the gear position switch groove.

Install the gear position switch while aligning its tab with the groove of the shift drum.

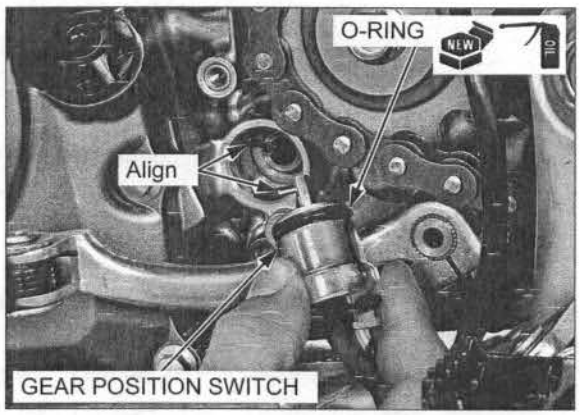

Route the wires properly (page 1-19).

Install the wire band.

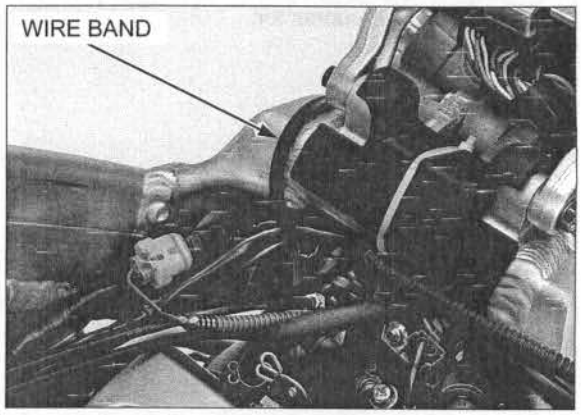

Route the wires properly (page 1-19).

Install the gear position switch 2P (Green) connector and wire band.

Install the following:

- Fuel tank (page 4-6)
- Drive sprocket cover (page 4-21)

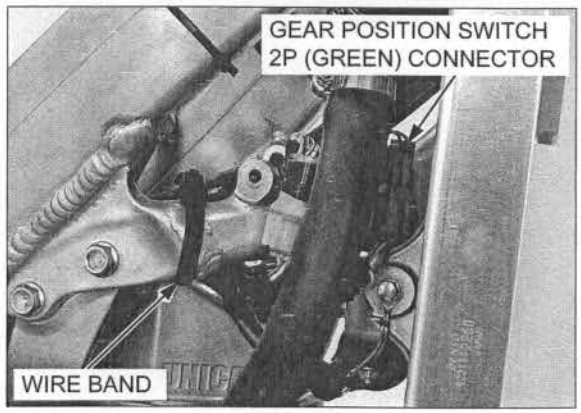

ENGINE STOP SWITCH INSPECTION

Remove the right radiator shroud (page 3-4).

Disconnect the engine stop switch 4P (Natural) connector.

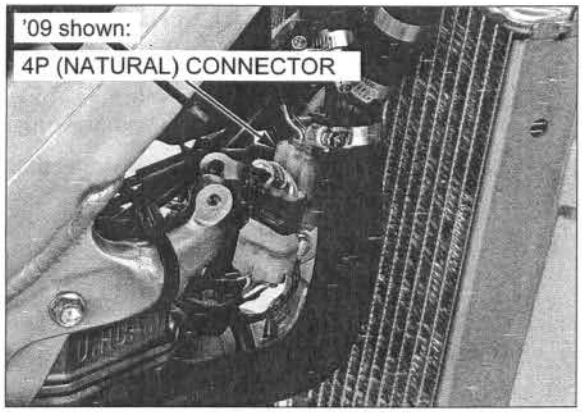

SWITCH INSPECTION

Check for continuity between the Black/white and Red/yellow wire terminals of the engine stop switch side.

There should be continuity with the engine stop switch pushed, and no continuity with the switch released.

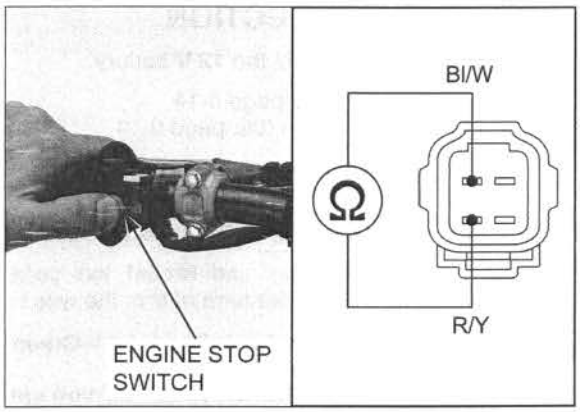

SWITCH LINE INSPECTION

Hang the fuel tank to the left side of the frame (page 4-6).

Disconnect the ECM 33P (Black) connector.

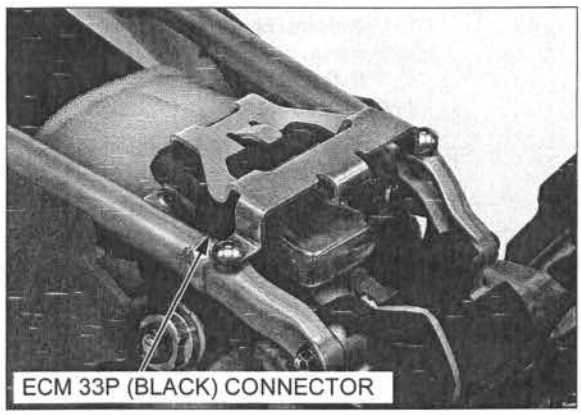

Check for continuity between the ECM 33P (Black) and engine stop switch 4P (Natural) connectors of the wire harness side.

TOOL:
Test probe **07ZAJ-RDJA110**

Connection: Black/white – Black/white (19)

There should be continuity.

If the engine stop switch and switch line are normal, check for ECM power/ground line (page 6-58).

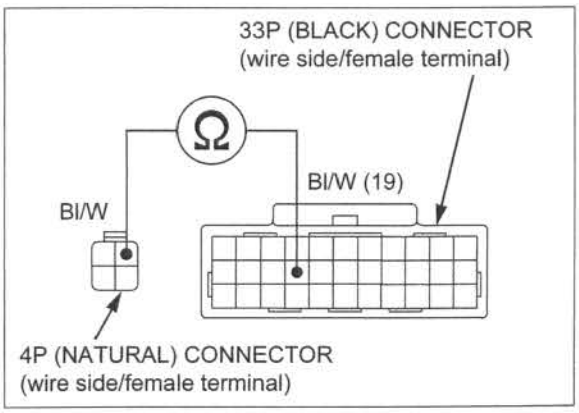

CONDENSER

REMOVAL/INSTALLATION

Disconnect the condenser 3P (After '09: 2P) (Black) connector.

Remove the condenser from the regulator/rectifier stay.

Installation is in the reverse order of removal.

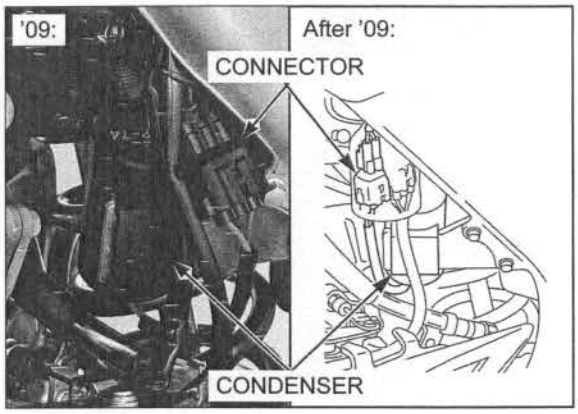

INSPECTION

Connect the 12 V battery.

- '09: page 6-14
- After '09: page 6-14

Disconnect the condenser 3P (After '09: 2P) (Black) connector.

Turn the "ECM" selector switch ON.

Measure and record the voltage at the condenser connector terminals of the wire side.

Connection: Black (+) – Green (–)

STANDARD: About battery voltage

Turn the "ECM" selector switch OFF.

If there is no voltage, open circuit in Black or Green wires.
If there is voltage, check the condenser as following procedures.

1. Connect the condenser 3P (After '09: 2P) (Black) connector.
2. Turn the "ECM" selector switch ON a few second and charge the condenser.
3. Turn the "ECM" selector switch OFF and disconnect the condenser 3P (After '09: 2P) (Black) connector.
4. Measure the voltage at the condenser 3P (After '09: 2P) (Black) connector terminals of the condenser side.

   Connection: Red (+) – Green (–)

   STANDARD: About battery voltage

   If there is no voltage, replace the condenser.

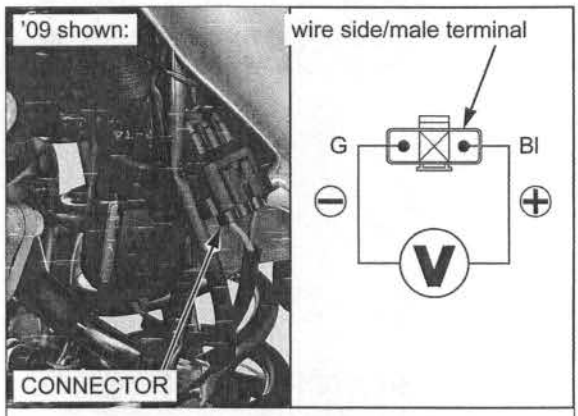

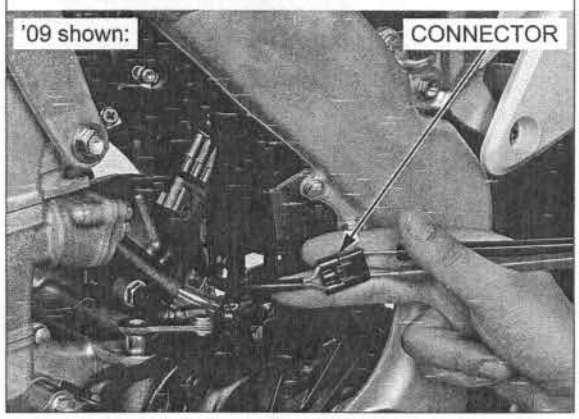

18. WIRING DIAGRAM

WIRING DIAGRAM

'09:

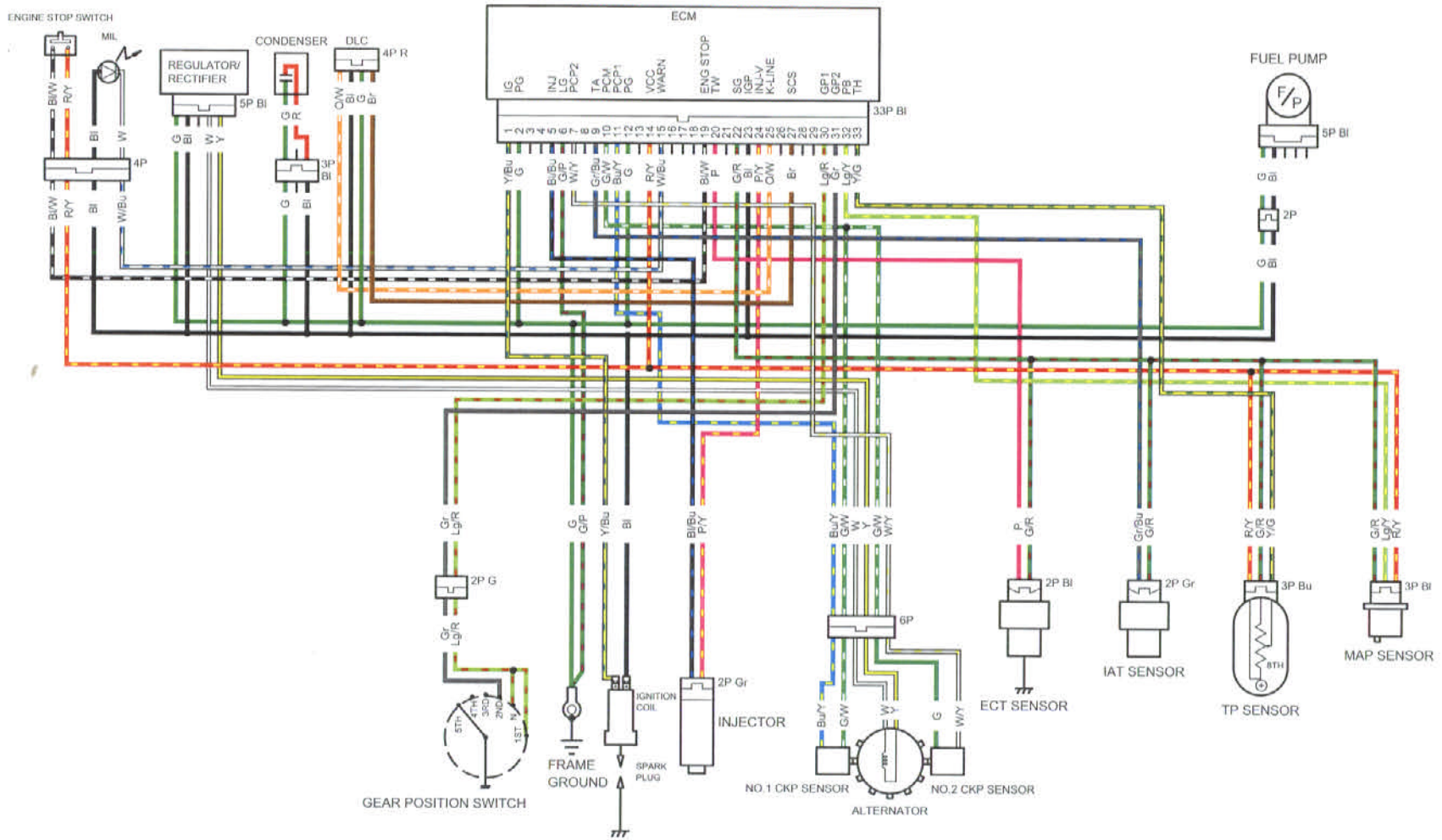

ENGINE STOP SWITCH		
	E	IG
FREE		
PUSH	O—O	
COLOR	Bl/W	R/Y

Bl	BLACK		Br	BROWN	
Y	YELLOW		O	ORANGE	
Bu	BLUE		Lb	LIGHT BLUE	
G	GREEN		Lg	LIGHT GREEN	
R	RED		P	PINK	
W	WHITE		Gr	GRAY	
V	VIOLET				

TWO COLOREDWIRE (EXAMPLE: YELLOW/RED)

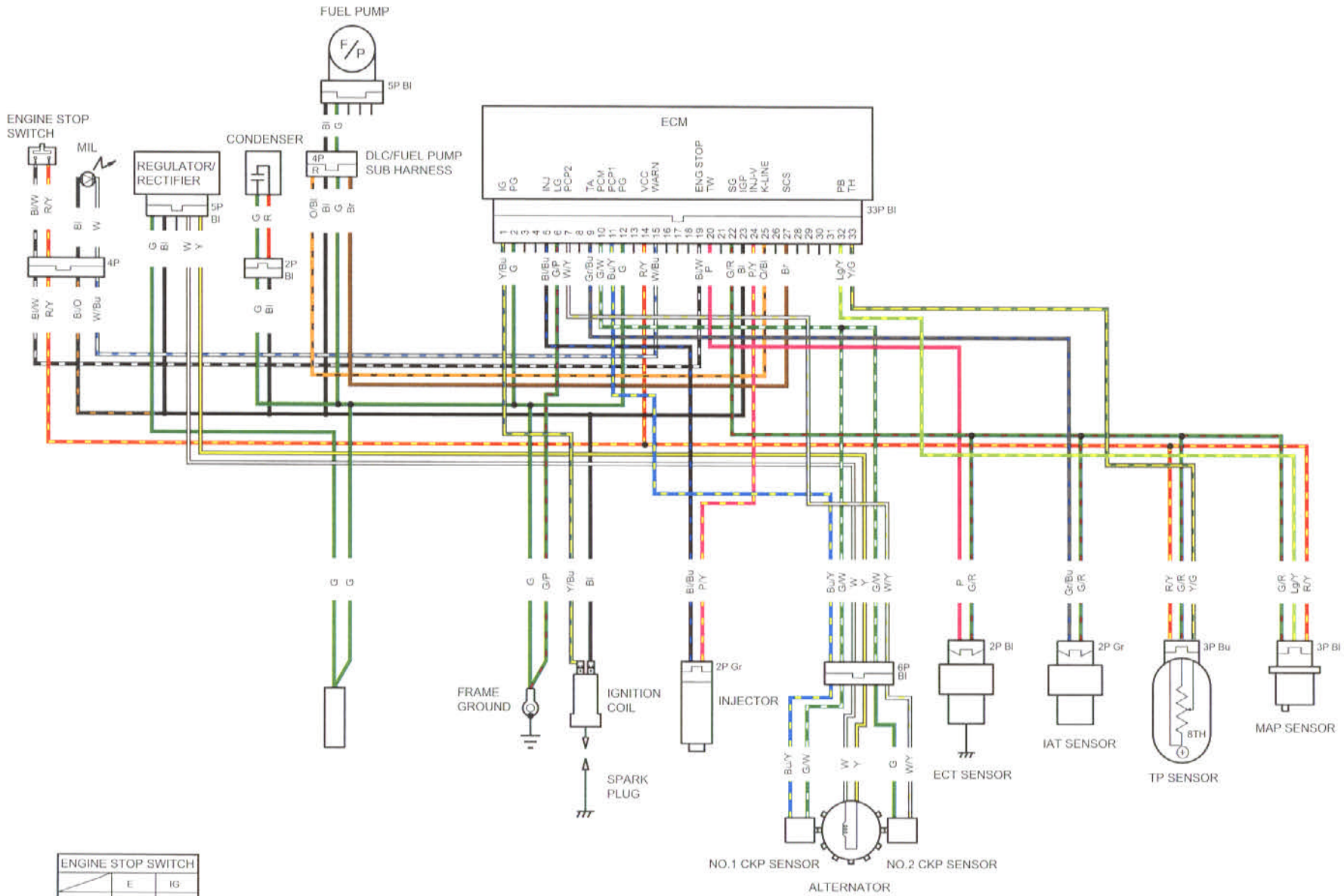

ENGINE STOP SWITCH		
	E	IG
FREE		
PUSH	O—O	
COLOR	Bl/W	R/Y

Bl	BLACK		Br	BROWN	
Y	YELLOW		O	ORANGE	
Bu	BLUE		Lb	LIGHT BLUE	
G	GREEN		Lg	LIGHT GREEN	
R	RED		P	PINK	
W	WHITE		Gr	GRAY	

TWO COLOREDWIRE (EXAMPLE:YELLOW/RED)

After '09:

MEMO

19. TROUBLESHOOTING

ENGINE DOES NOT START OR IS HARD TO START

1. **Spark Plug Inspection**

   Remove and inspect spark plug.

   Is the spark plug in good condition?

   YES – • Incorrect spark plug heat range
   • Incorrect spark plug gap
   • Dirty air cleaner
   • Fast idle knob stuck open or damaged

   NO – GO TO STEP 2.

2. **Spark Test**

   Perform spark test.

   Is there good spark?

   NO – • Loose or disconnected ignition system wires
   • Broken or shorted spark plug wire
   • Broken or shorted ignition coil
   • Faulty CKP sensor(s)
   • Faulty alternator coil
   • Faulty engine stop switch
   • Faulty ECM

   YES – GO TO STEP 3.

3. **Fuel Pump Inspection**

   Check for operation of the fuel pump and inspect the fuel flow.

   Is the fuel pump unit normal?

   YES – GO TO STEP 4.

   NO – Faulty fuel pump unit

4. **PGM-FI System Inspection**

   Check the PGM-FI system.

   Is the PGM-FI system normal?

   YES – GO TO STEP 5.

   NO – Faulty PGM-FI system

5. **Engine Starting Condition**

   Start engine by normal procedure.

   Does the engine start then stops?

   YES – • Improper fast idle knob operation
   • Leaking insulator
   • Improper ignition timing (Faulty ECM or CKP sensor(s))
   • Contaminated fuel

   NO – GO TO STEP 6.

6. **Cylinder Compression**

   Test cylinder compression.

   Is the compression low?

   YES – • Valve clearance too small
   • Valve stuck open
   • Worn cylinder and piston rings
   • Damaged cylinder head gasket
   • Seized valve
   • Improper valve timing

ENGINE LACKS POWER

1. **Drive Train Inspection**

   Raise wheel off the ground and spin by hand.

   Did the wheel spin freely?

   NO – • Brake dragging
   • Worn or damaged wheel bearings
   • Bent axle shaft
   • Drive chain too tight

   YES – GO TO STEP 2.

2. **Tire Pressure Inspection**

   Check tire pressure.

   Is the tire pressures low?

   YES – • Faulty valve core
   • Punctured tire

   NO – GO TO STEP 3.

3. **Clutch Inspection**

   Accelerate rapidly from low to second.

   Did the engine speed change accordingly when clutch is engaged?

   NO – • Clutch slipping
   • Improperly adjusted clutch lever freeplay
   • Worn clutch discs/plates
   • Warped clutch discs/plates
   • Weak clutch springs
   • Sticking clutch lifter
   • Additive in engine oil

   YES – GO TO STEP 4.

4. **Engine Performance Inspection**

   Accelerate lightly.

   Did the engine speed increase?

   NO – • Dirty air cleaner
   • Restricted fuel flow
   • Clogged muffler
   • Clogged fuel tank breather hose
   • Fast idle knob stuck open or damaged
   • Excessive carbon build-up in combustion chamber

   YES – GO TO STEP 5.

5. **Engine knocking Inspection**

   Accelerate or run at high speed.

   Is there knocking?

   YES – • Worn piston and cylinder
   • Use of poor quality fuel
   • Excessive carbon build-up in combustion chamber
   • Ignition timing too advance (Faulty ECM)
   • Lean fuel mixture
   • Faulty CKP sensor
   • Wrong type fuel

   NO – GO TO STEP 6.

6. Ignition Timing Inspection

Check ignition timing.

Is the ignition timing correct?

NO – • Faulty ECM
• Faulty CKP sensor(s)

YES – • '09: GO TO STEP 7.
• After '09: GO TO STEP 8.

7. Gear Position Switch Inspection ('09 model)

Check gear position switch.

Is the gear position switch normal?

NO – Faulty gear position switch

YES – GO TO STEP 8.

8. Cylinder compression Inspection

Test the cylinder compression.

Is the compression low?

YES – • Valve clearance too small
• Valve stuck open
• Worn cylinder and piston rings
• Damaged head gasket
• Improper valve timing
• Faulty decompressor system

NO – GO TO STEP 9.

9. Fuel pump Inspection

Inspect the fuel flow.

Is the fuel pump unit normal?

YES – GO TO STEP 10.

NO – Faulty fuel pump unit

10. PGM-FI System Inspection

Check the PGM-FI system.

Is the PGM-FI System normal?

YES – GO TO STEP 11.

NO – Faulty PGM-FI system

11. Spark Plug Inspection

Remove and inspect spark plug.

Is the spark plug fouled or discolored?

YES – • Spark plug not serviced frequently enough
• Incorrect spark plug used

NO – GO TO STEP 12.

12. Engine Oil Inspection

Check engine oil level and condition.

Is there correct level and good condition?

NO – • Engine oil level too high
• Engine oil level too low
• Contaminated engine oil

YES – GO TO STEP 13.

13. Lubrication Inspection

Remove cylinder head cover and inspect lubrication.

Is the valve train lubricated properly?

NO – • Faulty oil pump
• Faulty pressure relief valve
• Clogged oil passage
• Clogged oil strainer screen

POOR PERFORMANCE AT LOW AND IDLE SPEED

1. Intake Air Leak Inspection

Check for leaking insulator.

Is there leaking?

YES – • Loose insulator bands
• Damaged insulator

NO – GO TO STEP 2.

2. Spark Test

Perform spark test.

Is there weak or intermittent spark?

YES – • Faulty spark plug
• Fouled spark plug
• Faulty ignition coil
• Broken or shorted spark plug wire
• Faulty CKP sensor(s)
• Faulty alternator coil
• Faulty engine stop button
• Faulty ECM

NO – GO TO STEP 3.

3. Fuel Pump Inspection

Inspect the fuel flow.

Is the fuel pump unit normal?

YES – GO TO STEP 4.

NO – Faulty fuel pump unit

4. Ignition Timing Inspection

Check ignition timing.

Is the ignition timing correct?

NO – • Faulty ECM
• Faulty CKP sensor(s)

5. PGM-FI System Inspection

Check the PGM-FI system.

Is the PGM-FI system normal?

NO – Faulty PGM-FI system

POOR PERFORMANCE AT HIGH SPEED

1. **Fuel Pump Inspection**

   Inspect the fuel flow.

   Is the fuel pump unit normal?

   YES – GO TO STEP 2.

   NO – Faulty fuel pump unit

2. **PGM-FI System Inspection**

   Check the PGM-FI system.

   Is the PGM-FI system normal?

   YES – GO TO STEP 3.

   NO – Faulty PGM-FI system

3. **Ignition Timing Inspection**

   Check ignition timing.

   Is the ignition timing correct?

   NO – • Faulty ECM
   • Faulty CKP sensor(s)

   YES – GO TO STEP 4.

4. **Valve Timing Inspection**

   Check valve timing.

   Is the valve timing correct?

   NO – Camshaft not installed properly

   YES – GO TO STEP 5.

5. **Camshaft Inspection**

   Remove and inspect the camshaft

   Is the cam lobe height within specification?

   YES – Faulty camshaft

POOR HANDLING

Steering is heavy
- Steering stem adjusting nut too tight
- Damaged steering head bearings
- Faulty HPSD

Either wheel is wobbling
- Excessive wheel bearing play
- Bent rim
- Improperly installed wheel hub
- Excessively worn swingarm pivot bearings
- Bent frame

The motorcycle pulls to one side
- Front and rear wheels not aligned
- Bent fork
- Bent swingarm
- Bent axle shaft
- Bent frame

NOTE:
- For the recommendations below to be most useful, the motorcycle must be adjusted as follows;
  - Fork: compression damping at standard position, at standard fork oil quantity and viscosity, and air pressure zero.
  - Shock: nitrogen pressure 1 MPa (10.2 kg/cm^2, 145 psi), compression and rebound damping standard position, and spring preload adjusted so the bikes sags with rider seated - see Owner's manual for spring preload adjustment
- Make only one change at a time in the sequence of remedies given below

Front End Oversteers; It Cuts Too Sharply (such as in sand)
- Increase the fork oil capacity
- Use stiffer fork spring

Front End Understeers; It Washes Out Or Pushes (such as on at tight track with hard ground)
- Lower fork oil capacity
- Use softer fork spring

Front End Hunts At High Speed; It Wanders Under Power
- Increase the fork oil capacity
- Increase the shock oil preload

Front End Shakes Under Heavy Braking
- Decrease shock absorber preload
- Increase shock absorber rebound damping
- Increase the fork oil capacity

Front End Hops Over Bumps In Smooth Turns
- Decrease the fork oil capacity
- Decrease fork compression damping
- Use softer fork spring

Rear End Hops Over Bumps While Accelerating
- Decrease shock absorber preload
- Decrease shock absorber compression damping

Rear End Gets Poor Traction While Accelerating Away From A Corner
- Decrease shock absorber preload
- Decrease shock absorber compression damping

MEMO

INDEX

INDEX